Impact Study of Limited Operation for Generator Interconnection

GEN-2012-002
GEN-2012-007
ASGI-2012-006

April 2013
Generation Interconnection

SPP Southwest Power Pool

Executive Summary

This study report addresses the request of three separate Interconnection Customers (GEN-2012-002, GEN-2012-007 and ASGI-2012-006) to interconnect their requested generators before the completion of all network upgrades identified in their interconnection studies. The three Interconnection Customer's generation totals 243.7MW of nameplate generation with a mixture of fuel types. The following Limited Operation System Impact Study under the Southwest Power Pool Open Access Transmission Tariff (OATT) addresses the interconnection of 243.7 MW of combustion and wind generation to be interconnected as an Energy Resource (ER) into the Transmission System of Sunflower Electric Power Corporation (SUNC) in Scott and Grant Counties, Kansas. ASGI-2012-006 is located Stevens County, Kansas in the Pioneer Electric Cooperative system and has ties into the Sunflower Electric Power Corporation (SUNC) Transmission System. Customers, under GIA Section 5.9, have requested this Limited Operation Interconnection Study (LOIS) to determine the impacts of interconnecting to the transmission system before all required Network Upgrades identified in the DISIS-2012-001 (or most recent iteration) Impact Study can be placed into service.

This LOIS addresses the effects of interconnecting the generators to the rest of the transmission system with the system topology and conditions as expected in March 2014. GEN-2012-002 is requesting the interconnection of forty-four (44) Siemens SWT 2.3 MW wind turbine generators and associated facilities into a tap on the Scott City – Pile 115kV transmission line. GEN-2012-007 is requesting the interconnection of twelve (12) Caterpillar (CAT) G20CM34 Gas Reciprocating Engines through a new substation into a tap on the Hickock – Satanta Tap 115kV transmission line. ASGI-2012-006 is requesting the interconnection of a 22.5 MW steam turbine generator with a 17 MW in-house load through a tap on the Hugoton – Rolla 69kV transmission line. For the typical LOIS, both a power flow and transient stability analysis are conducted. The LOIS assumes that only the higher queued projects listed within Table 1 of this study might go into service before the completion of all Network Upgrades identified within Table 2 of this report. If additional generation projects, listed within Table 3, with queue priority equal to or higher than the study project request rights to go into commercial operation before all Network Upgrades identified within Table 2 of this report are completed, this LOIS may need to be restudied to ensure that interconnection service remains for the customer's request.

Power flow analysis from this LOIS has determined that the customer's request will be able to interconnect a limited amount of generation as an Energy Resource prior to the completion of the required Network Upgrades, listed within Table 2 of this report. Refer to Tables 4, 5 and 6 for the Limited Operation Interconnection Service available due to interconnection constraints. Should any other projects, other than those listed within Table 1 of this report, come into service an additional study may be required to determine if any limited operation service is available. It should be noted that although this LOIS analyzed many of the most probable contingencies, it is not an all-inclusive list that can account for every operational situation. Additionally, the generator may not be able to inject any power onto the Transmission System due to constraints that fall below the threshold of mitigation for a Generator Interconnection request. Because of this, it is likely that the Customers may be required to reduce their generation output to **0 MW** under certain system conditions to allow system operators to maintain the reliability of the transmission network.

Transient stability analysis for this LOIS has determined that the transmission system will remain stable for the ninety-eight (98) selected faults for the limited operation interconnection of the customers and will meet Low Voltage Ride Through (LVRT) requirements of FERC Order #661A.

Nothing in this study should be construed as a guarantee of transmission service. If the customer wishes to sell power from the facility, a separate request for transmission service must be requested on Southwest Power Pool's OASIS by the Customer.

Table of Contents

Executive Summary i

Table of Contents iii

Purpose 1

Facilities 5

Generating Facility 5

Interconnection Facilities 5

Base Case Network Upgrades 7

Power Flow Analysis 8

Model Preparation 8

Study Methodology and Criteria 8

Results 8

Limited Operation and System Reliability 9

Stability Analysis 13

Model Preparation 13

Disturbances 13

Results 16

FERC LVRT Compliance 18

Conclusion 20

Purpose

<OMITTED TEXT> (Interconnection Customers) have requested a study of a Limited Operation System Impact Study (LOIS) under the Southwest Power Pool (SPP) Open Access Transmission Tariff (OATT) for interconnection requests into the Transmission System of Sunflower Electric Power Corporation (SUNC) as well as an Affected System generator embedded in the Sunflower Electric transmission system.

The purpose of this study is to evaluate the impacts of interconnecting GEN-2012-002 request of 101.2 MW comprised of forty-four (44) Siemens SWT 2.3 MW wind turbine generators and associated facilities interconnecting into a tap on the Scott City – Pile 115kV transmission line in Scott County, Kansas, GEN-2012-007 request of twelve (12) CAT G20CM34 Gas Reciprocating Engines through a new substation into a tap on the Hickock – Satanta tap 115kV transmission line Grant County, Kansas, ASGI-2012-006 request of a 22.5 MW steam turbine generator with a 17 MW in-house load through a tap on the Hugoton – Rolla 69kV transmission line in Stevens County, Kansas. The Customers have requested this amount to be studied as an Energy Resource (ER) with a Limited Operation Interconnection Service to commence on or around March of 2014.

Both power flow and transient stability analysis were conducted for this Limited Operation Interconnection Service. Limited Operation Studies are conducted under GIA Section 5.9.

The LOIS considers the Base Case as well as all Generating Facilities (and with respect to (b) below, any identified Network Upgrades associated with such higher queued interconnection) that, on the date the LOIS is commenced:

a) are directly interconnected to the Transmission System;
b) are interconnected to Affected Systems and may have an impact on the Interconnection Request;
c) have a pending higher queued Interconnection Request to interconnect to the Transmission System listed in Table 1; or
d) have no Queue Position but have executed an LGIA or requested that an unexecuted LGIA be filed with FERC.

Any changes to these assumptions, for example, one or more of the previously queued requests not included within this study execute an interconnection agreement and commencing commercial operation, may require a re-study of this LOIS at the expense of the Customer.

Nothing within this System Impact Study constitutes a request for transmission service or confers upon the Interconnection Customer any right to receive transmission service rights. Should the Customer require transmission service, those rights should be requested through SPP's Open Access Same-Time Information System (OASIS).

This LOIS study included prior queued generation interconnection requests. Those listed within Table 1 are the generation interconnection requests that are assumed to have rights to either full

or partial interconnection service prior to the requested 3/2014 in-service date of the Customers for this LOIS. Also listed in Table 1 are both the amount of MWs of interconnection service expected at the effective time of this study and the total MWs requested of interconnection service, the fuel type, the point of interconnection (POI), and the current status of each particular prior queued request.

Table 1: Generation Requests Included within LOIS

Project	MW	Total MW	Fuel Source	POI	Status
GEN-2001-039A	105.0	105.0	Wind	Tap Greensburg - Ft Dodge (Shooting Star Tap) 115kV	Commercial Operation
GEN-2001-039M	99.0	99.0	Wind	Central Plains Tap 115kV	Commercial Operation
GEN-2002-025A	150.0	150.0	Wind	Spearville 230kV	Commercial Operation
GEN-2003-006A	200.0	200.0	Wind	Elm Creek 230kV	Commercial Operation
GEN-2003-019	250.0	250.0	Wind	Smoky Hills Tap 230kV	Commercial Operation
GEN-2004-014	100.0	154.5	Wind	Spearville 230kV	Commercial Operation
GEN-2005-012	167.0	250.0	Wind	Spearville 345kV	Commercial Operation
GEN-2006-021	101.0	101.0	Wind	Flat Ridge Tap 138kV	Commercial Operation
GEN-2007-040	132.0	200.0	Wind	Buckner 345kV	Commercial Operation
GEN-2008-018	250.0	405.0	Wind	Finney 345kV	IA Executed/On Schedule
GEN-2008-079	98.9	98.9	Wind	Tap Cudahy - Ft Dodge 115kV	Commercial Operation
GEN-2009-008	199.5	199.5	Wind	South Hays 230kV	IA Executed/On Suspension
GEN-2009-020	48.3	48.3	Wind	Tap Nekoma - Bazine 69kV	IA Executed/On Suspension
GEN-2010-009	165.6	165.6	Wind	Buckner 345kV	Commercial Operation
GEN-2012-002	101.2	101.2	Wind	Tap Scott City - Pile 115kV	Facility Study Stage
GEN-2012-007	120.0	120.0	Gas	Rubart 115kV	Facility Study Stage
ASGI-2012-006	22.5	22.5	Steam	Tap Hugoton - Rolla 69kV	Facility Study Stage

This LOIS was required because the Customers are requesting interconnection prior to the completion of all of their required upgrades listed within the latest iteration of their Definitive Interconnection System Impact Study (DISIS). Table 2 below lists the required upgrade projects for which this request has cost responsibility. The Customers were included within the DISIS-2012-001 that was studied in spring 2012 and posted July 26, 2012. The cluster has been restudied since the original posting. These reports can be located here at the following GI Study URL: http://sppoasis.spp.org/documents/swpp/transmission/GenStudies.cfm?YearType=2012_Impact_Studies.

Table 2: Upgrade Projects not included but Required for Full Interconnection Service

Upgrade Project	Type	Description	Status
Holcomb 345/115/13.8kV Transformer (Build second 345/115kV transformer at Holcomb)	Shared Network Upgrade to be designed, constructed, and owned by the Transmission Owner. Required to support full interconnection.	DISIS-2012-001 Customers	Not authorized to begin construction
Beaver County 345kV Expansion	Most recent iteration of DISIS 2011-001. Previous Network Upgrade not responsibility of Customer but required to support full interconnection.	Upgrade	Not authorized to begin construction
Beaver County – Buckner 345kV CKT 1 (Build approx. 90 miles of 345kV)	Most recent iteration of DISIS 2011-001. Previous Network Upgrade not responsibility of Customer but required to support full interconnection.	Upgrade	Not authorized to begin construction
Finney Switching Station – Holcomb 345kV CKT 2	Most recent iteration of ICS 2008-001. Previous Network Upgrade not responsibility of Customer but required to support full interconnection.	Upgrade	Not authorized to begin construction
Fort Dodge – North Fort Dodge 115kV CKT 2 (Build approx. 1 mile of 115kV)	Most recent iteration of DISIS 2009-001. Previous Network Upgrade not responsibility of Customer but required to support full interconnection.	Upgrade	Not authorized to begin construction
Hitchland 345/230kV Autotransformer CKT 2	Most recent iteration of DISIS 2010-001. Previous Network Upgrade not responsibility of Customer but required to support full interconnection.	Build Priority Project	Current Estimated In-Service date of 6/30/2014
Hitchland – Woodward 345kV Dbl CKT	Most recent iteration of DISIS 2011-001. Previous Network Upgrade not responsibility of Customer but required to support full interconnection.	Build Priority Project	Current Estimated In-Service date of 6/30/2014
Matthewson – Cimarron 345kV CKT 2	Most recent iteration of DISIS 2011-001. Previous Network Upgrade not responsibility of Customer but required to support full interconnection.	Upgrade	Not authorized to begin construction
Mullergren – Reno 345kV Dbl CKT (Build approx. 92 miles of 345kV)	Most recent iteration of DISIS 2011-001. Previous Network Upgrade not responsibility of Customer but required to support full interconnection.	Upgrade	Not authorized to begin construction
North Fort Dodge – Spearville 115kV CKT 2	Most recent iteration of DISIS 2009-001. Previous Network Upgrade not responsibility of Customer but required to support full interconnection.	Upgrade	Not authorized to begin construction
Spearville – Clark – Thistle 345kV Dbl CKT	Most recent iteration of DISIS 2010-001. Previous Network Upgrade not responsibility of Customer but required to support full interconnection.	Build Priority Project	Current Estimated In-Service date of 12/31/2014
Spearville – Mullergren 345kV Dbl CKT (Build approx. 85 miles of 345kV)	Most recent iteration of DISIS 2011-001. Previous Network Upgrade not responsibility of Customer but required to support full interconnection.	Upgrade	Not authorized to begin construction

Upgrade Project	Type	Description	Status
Spearville 345/115/13.8kV Transformer CKT 1	Most recent iteration of DISIS 2009-001. Previous Network Upgrade not responsibility of Customer but required to support full interconnection.	Upgrade	Not authorized to begin construction
Tatonga – Matthewson 345kV CKT 2	Most recent iteration of DISIS 2011-001. Previous Network Upgrade not responsibility of Customer but required to support full interconnection.	Upgrade	Not authorized to begin construction
Thistle – Wichita 345kV Dbl CKT	Most recent iteration of DISIS 2010-001. Previous Network Upgrade not responsibility of Customer but required to support full interconnection.	Build Priority Project	Current Estimated In-Service date of 12/31/2014
Woodward 345/138/13.8kV Transformer CKT 2	Most recent iteration of DISIS 2012-001. Previous Network Upgrade not responsibility of Customer but required to support full interconnection.	Build Balanced Portfolio Project	Current Estimated In-Service date of 5/19/2014

Any changes to these assumptions, for example, one or more of the previously queued requests not included within this study execute an interconnection agreement and commencing commercial operation, may require a re-study of this LOIS at the expense of the Customer. The higher or equally queued projects that were not included in this study are listed in Table 3. While this list is not all inclusive it is a list of the most probable and affecting prior queued requests that were not included within this LOIS, either because no request for an LOIS has been made or the request is on suspension, etc.

Table 3: Higher or Equally Queued GI Requests not included within LOIS

Project	Remainder MW	Total MW	Fuel	POI	Status
GEN-2004-014	54.5	154.5	Wind	Spearville 230kV	Commercial Operation
GEN-2005-012	83.0	250.0	Wind	Spearville 345kV	IA Executed/On Schedule for 2015
GEN-2006-006	205.5	205.5	Wind	Spearville 345kV	IA Executed/On Schedule for 2015
GEN-2006-032	200.0	200.0	Wind	South Hays 230kV	IA Executed/On Suspension
GEN-2006-040	108.0	108.0	Wind	Mingo 115kV	IA Executed/On Suspension
GEN-2007-011	135.0	135.0	Wind	Syracuse 115kV	IA Executed/On Suspension
GEN-2007-038	200.0	200.0	Wind	Spearville 345kV	IA Executed/On Schedule for 08/25/2015
GEN-2007-040	68.0	200.0	Wind	Buckner 345kV	IA Executed/On Schedule for 2012
GEN-2008-017	300.0	300.0	Wind	Setab 345kV	IA Executed/On Schedule for 10/2015
GEN-2008-018	155.0	405.0	Wind	Finney 345kV	IA Executed/On Schedule
GEN-2008-025	101.0	101.0	Wind	Ruleton 115kV	IA Executed/On Schedule for 06/01/2015
GEN-2008-092	201.0	201.0	Wind	Knoll 230kV	IA Pending
GEN-2008-124	200.1	200.1	Wind	Spearville 345kV	IA Executed/On Schedule for 01/01/2016
GEN-2010-015	200.1	200.1	Wind	Spearville 345kV	IA Executed/On Schedule for 01/01/2015

Nothing in this System Impact Study constitutes a request for transmission service or grants the Interconnection Customer any rights to transmission service.

Facilities

Generating Facility

GEN-2012-002 Interconnection Customer's request to interconnect a total of 101.2 MW is comprised of forty-four (44) Siemens SWT 2.3 MW wind turbine generators and associated interconnection facilities. GEN-2012-007 Interconnection Customer's request to interconnect a total of 120 MW is comprised of twelve (12) Caterpillar (CAT) G20CM34 Gas Reciprocating Engines and associated interconnection facilities. ASGI-2012-006 Interconnection Customer's request to interconnect a total of 22.5 MW is comprised of a steam turbine generator and associated interconnection facilities with a 17 MW in-house load.

Interconnection Facilities

GEN-2012-002

The POI for GEN-2012-002 Interconnection Customer is through a tap on the Scott City – Pile 115kV transmission line in Scott County, Kansas. Figure 1 depicts the one-line diagram of the local transmission system including the POI as well as the power flow model representing the request.

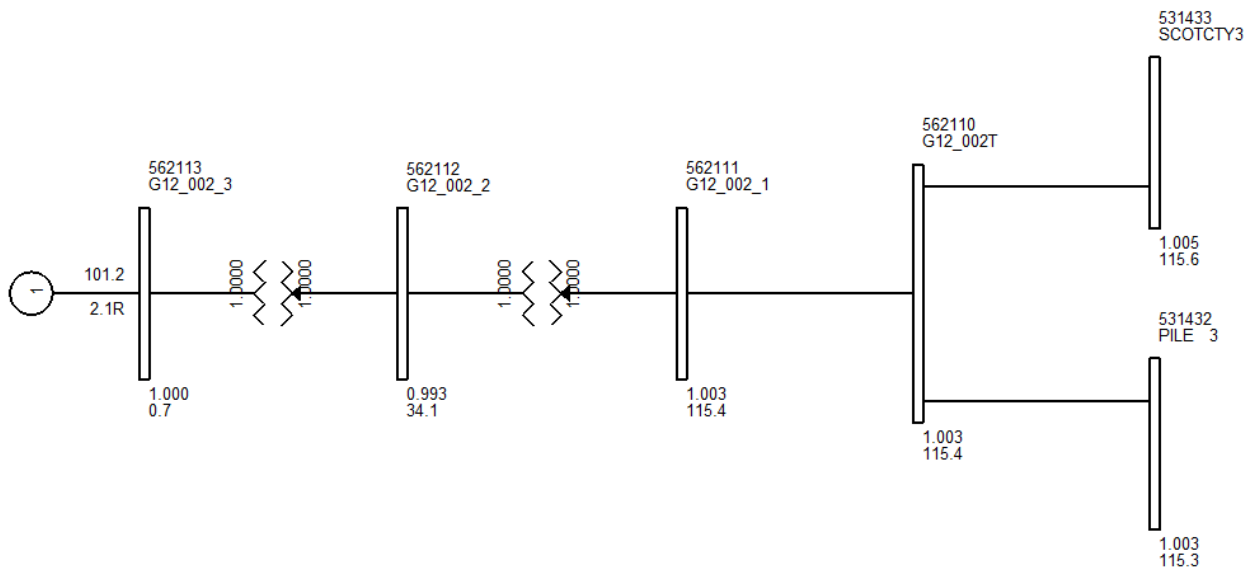

Figure 1: Proposed POI Configuration and Request Power Flow Model

GEN-2012-007

The POI for GEN-2012-007 Interconnection Customer is through a new substation into a tap on the Hickock – Satanta tap 115kV transmission line in Grant County, Kansas. Figure 2 depicts the one-line diagram of the local transmission system including the POI as well as the power flow model representing the request.

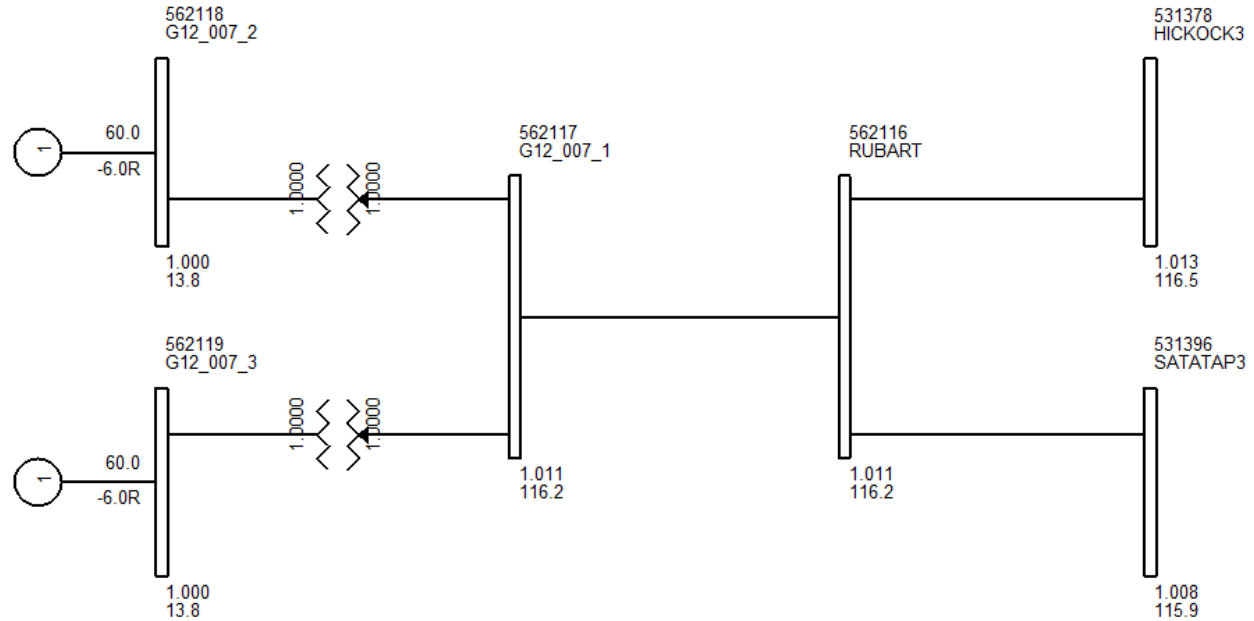

Figure 2: Proposed POI Configuration and Request Power Flow Model

<u>ASGI-2012-006</u>

The POI for ASGI-2012-006 Interconnection Customer is through a tap on the Hugoton – Rolla 69kV transmission line in Stevens County, Kansas. Figure 3 depicts the one-line diagram of the local transmission system including the POI as well as the power flow model representing the request.

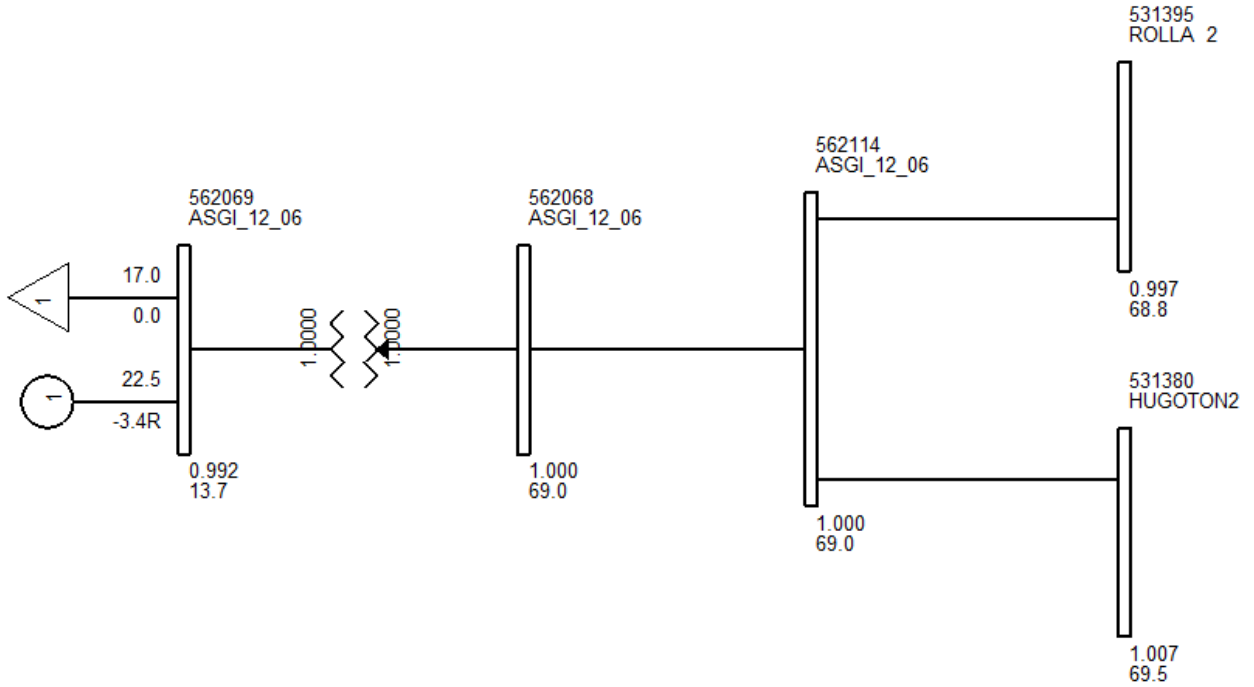

Figure 3: Proposed POI Configuration and Request Power Flow Model

Base Case Network Upgrades

The Network Upgrades included within the cases used for this LOIS study are those facilities that are a part of the SPP Transmission Expansion Plan or the Balanced Portfolio projects that have in-service dates prior to the Customers LOIS requested in-service date of March 2014. These facilities have an approved Notice to Construct (NTC), or are in construction stages and expected to be in-service at the effective time of this study. No other upgrades were included for this LOIS. If for some reason, construction on these projects is delayed or discontinued, a restudy may be needed to determine the interconnection service availability of the Customer.

Power Flow Analysis

Power flow analysis is used to determine if the transmission system can accommodate the injection from the request without violating thermal or voltage transmission planning criteria.

Model Preparation

Power flow analysis was performed using modified versions of the 2012 series of transmission service request study models including the 2014 (spring, summer, and winter) seasonal models. To incorporate the Interconnection Customers' request, a re-dispatch of existing generation within SPP was performed with respect to the amount of the Customers' injection and the interconnecting Balancing Authority. This method allows the request to be studied as an Energy Resource (ERIS) Interconnection Request. For this LOIS, only the previous queued requests listed in Table 1 were assumed to be in-service.

Study Methodology and Criteria

The ACCC function of PSS/E is used to simulate contingencies, including single and multiple facility (i.e. breaker-to-breaker, etc.) outages, within all of the control areas of SPP and other control areas external to SPP and the resulting data analyzed. This satisfies the "more probable" contingency testing criteria mandated by NERC and the SPP criteria.

The contingency set includes all SPP control area branches and ties 69kV and above, first tier Non-SPP control area branches and ties 115 kV and above, any defined contingencies for these control areas, and generation unit outages for the SPP control areas with SPP reserve share program redispatch.

The monitor elements include all SPP control area branches, ties, and buses 69 kV and above, and all first tier Non-SPP control area branches and ties 69 kV and above. NERC Power Transfer Distribution Flowgates for SPP and first tier Non-SPP control area are monitored. Additional NERC Flowgates are monitored in second tier or greater Non-SPP control areas. Voltage monitoring was performed for SPP control area buses 69 kV and above.

Results

The LOIS ACCC analysis indicates that the Customers can interconnect a limited amount of generation into the SUNC transmission system before all required upgrades listed within the DISIS-2012-001 study can be placed into service. Refer to Tables 4, 5 and 6 for the Limited Operation Interconnection Service available at the interconnect date of March 2014 due to interconnection constraints. Should any other GI projects, other than those listed within Table 1 of this report, come into service an additional study may be required to determine if any limited operation service is available.

ACCC results for the LOIS can be found in Tables 4, 5, 6, 7 and Appendix A below. Generator Interconnection Energy Resource analysis doesn't mitigate for those issues in which the affecting GI request has less than a 20% OTDF, Table 7 and Appendix A are provided for informational purposes

only so that the Customer understands there may be operational conditions when they may be required to reduce their output to maintain system reliability.

Limited Operation and System Reliability

In no way does this study guarantee limited operation for all periods of time. It should be noted that although this LOIS analyzed many of the most probable contingencies, it is not an all-inclusive list and cannot account for every operational situation. Because of this, it is likely that the Customer may be required to reduce their generation output to **0 MW** under certain system conditions to allow system operators to maintain the reliability of the transmission network.

Table 4: Interconnection Constraints for Mitigation of GEN-2012-002 LOIS @ 101.2MW

Season	Dispatch Group	Flow	Monitored Element	RATEA (MVA)	RATEB (MVA)	TDF	TC% LOADING	Max MW Available	Contingency
Summer	00G12_002	FROM->TO	G12_002T 115.00 - SCOTT CITY 115KV CKT 1	165.0	198.0	0.856	112.0	84.4	HOLCOMB (HOLCOMB) 345/115/13.8KV TRANSFORMER CKT 1
Winter	00G12_002	FROM->TO	G12_002T 115.00 - SCOTT CITY 115KV CKT 1	165.0	198.0	0.856	100.9	99.9	HOLCOMB (HOLCOMB) 345/115/13.8KV TRANSFORMER CKT 1

Table 5: Interconnection Constraints for Mitigation of GEN-2012-007 LOIS @ 120.0MW

Season	Dispatch Group	Flow	Monitored Element	RATEA (MVA)	RATEB (MVA)	TDF	TC% LOADING	Max MW Available	Contingency
Summer	00G12_007	FROM->TO	G12_002T 115.00 - SCOTT CITY 115KV CKT 1	165.0	198.0	0.435	112.0	91.8	HOLCOMB (HOLCOMB) 345/115/13.8KV TRANSFORMER CKT 1
Winter	00G12_007	TO->FROM	5 HICKOCK - RUBART 115.00 115KV CKT 1	119.5	119.5	1	101.0	118.8	RUBART 115.00 - SANT T 3 115KV CKT 1
Winter	00G12_007	FROM->TO	G12_002T 115.00 - SCOTT CITY 115KV CKT 1	165.0	198.0	0.436	100.9	108.6	HOLCOMB (HOLCOMB) 345/115/13.8KV TRANSFORMER CKT 1
Winter	00G12_007	FROM->TO	RUBART 115.00 - SANT T 3 115KV CKT 1	119.5	119.5	1	100.4	119.5	5 HICKOCK - RUBART 115.00 115KV CKT 1

Table 6: Interconnection Constraints for Mitigation of ASGI-2012-006 LOIS @ 22.5MW

Season	Dispatch Group	Flow	Monitored Element	RATEA (MVA)	RATEB (MVA)	TDF	TC% LOADING	Max MW Available	Contingency
Summer	00ASGI12_006	FROM->TO	G12_002T 115.00 - SCOTT CITY 115KV CKT 1	165.0	198.0	0.387	112.0	18.8	HOLCOMB (HOLCOMB) 345/115/13.8KV TRANSFORMER CKT 1
Winter	00ASGI12_006	FROM->TO	G12_002T 115.00 - SCOTT CITY 115KV CKT 1	165.0	198.0	0.387	100.9	22.2	HOLCOMB (HOLCOMB) 345/115/13.8KV TRANSFORMER CKT 1

Table 7: Additional Constraints of Customers LOIS

Season	Dispatch Group	Flow	Monitored Element	RATEA (MVA)	RATEB (MVA)	TDF	TC% LOADING	ATC Available	Contingency
Spring	03G12_002	FROM->TO	HARPER - MILAN TAP 138KV CKT 1	95.6	95.6	0.033	132.0	0	ALEXANDER - SAWYER 3 115.00 115KV CKT 1
Spring	03G12_002	FROM->TO	HARPER - MILAN TAP 138KV CKT 1	95.6	95.6	0.054	122.3	0	SPP-SWPS-05
Spring	03G12_002	FROM->TO	HARPER - MILAN TAP 138KV CKT 1	95.6	95.6	0.054	122.3	0	FINNEY SWITCHING STATION - Hitchland Interchange 345KV CKT 1
Spring	03G12_002	FROM->TO	HARPER - MILAN TAP 138KV CKT 1	95.6	95.6	0.054	112.4	0	FINNEY SWITCHING STATION - HOLCOMB 345KV CKT 1
Spring	03G12_002	FROM->TO	HARPER - MILAN TAP 138KV CKT 1	95.6	95.6	0.044	112.0	0	ST JOHN - ST_JOHN 115KV CKT 1
Spring	03G12_002	FROM->TO	HARPER - MILAN TAP 138KV CKT 1	95.6	95.6	0.038	111.7	0	NORTH JUDSON LARGE SUB - SPEARVILLE 115KV CKT 1
Spring	03G12_002	FROM->TO	HARPER - MILAN TAP 138KV CKT 1	95.6	95.6	0.033	111.4	0	ALEXANDER - NINNESC3 115.00 115KV CKT 1

Season	Dispatch Group	Flow	Monitored Element	RATEA (MVA)	RATEB (MVA)	TDF	TC% LOADING	ATC Available	Contingency
Spring	03G12_002	FROM->TO	HARPER - MILAN TAP 138KV CKT 1	95.6	95.6	0.038	111.3	0	SPEARVILLE (SPEARVL6) 230/115/13.8KV TRANSFORMER CKT 1
Spring	03G12_002	FROM->TO	HARPER - MILAN TAP 138KV CKT 1	95.6	95.6	0.038	111.0	0	GEN532751 1-WOLF CREEK GENERATING STATION UNIT 1
Spring	03G12_002	FROM->TO	HARPER - MILAN TAP 138KV CKT 1	95.6	95.6	0.044	110.1	0	POST ROCK - SPEARVILLE 345KV CKT 1
Spring	03G12_002	FROM->TO	HARPER - MILAN TAP 138KV CKT 1	95.6	95.6	0.043	109.6	0	RENO COUNTY - WICHITA 345KV CKT 1
Spring	03G12_002	FROM->TO	HARPER - MILAN TAP 138KV CKT 1	95.6	95.6	0.046	109.2	0	CIRCLE - MULLERGREN 230KV CKT 1
Spring	03G12_002	TO->FROM	CLEARWATER - MILAN TAP 138KV CKT 1	110	110	0.033	108.6	0	ALEXANDER - SAWYER 3 115.00 115KV CKT 1
Spring	03G12_002	FROM->TO	HARPER - MILAN TAP 138KV CKT 1	95.6	95.6	0.038	107.6	0	45TH ST4 138.00 - EVANS ENERGY CENTER SOUTH 138KV CKT 1
Spring	03G12_002	FROM->TO	HARPER - MILAN TAP 138KV CKT 1	95.6	95.6	0.038	107.5	0	45TH ST4 138.00 - COWSKIN 138KV CKT 1
Spring	03G12_002	FROM->TO	HARPER - MILAN TAP 138KV CKT 1	95.6	95.6	0.035	107.3	0	CUDAHY - G08-79T 115.00 115KV CKT 1
Spring	03G12_002	FROM->TO	HARPER - MILAN TAP 138KV CKT 1	95.6	95.6	0.038	107.2	0	GEN532722 1-EVANS ENERGY CENTER UNIT 2
Spring	03G12_002	FROM->TO	HARPER - MILAN TAP 138KV CKT 1	95.6	95.6	0.033	107.0	0	NINNESC3 115.00 - ST JOHN 115KV CKT 1
Spring	03G12_002	FROM->TO	HARPER - MILAN TAP 138KV CKT 1	95.6	95.6	0.040	106.9	0	LAWTON EASTSIDE - OKLAUNION 345KV CKT 1
Spring	03G12_002	FROM->TO	HARPER - MILAN TAP 138KV CKT 1	95.6	95.6	0.035	106.8	0	CUDAHY - KISMET 3 115.00 115KV CKT 1
Spring	03G12_002	FROM->TO	HARPER - MILAN TAP 138KV CKT 1	95.6	95.6	0.035	106.7	0	CIMARRON RIVER TAP - KISMET 3 115.00 115KV CKT 1
Spring	03G12_002	FROM->TO	HARPER - MILAN TAP 138KV CKT 1	95.6	95.6	0.042	106.7	0	SMOKYHL6 230.00 - SUMMIT 230KV CKT 1
Spring	03G12_002	FROM->TO	HARPER - MILAN TAP 138KV CKT 1	95.6	95.6	0.038	106.4	0	EVANS ENERGY CENTER SOUTH - LAKERIDGE 138KV CKT 1
Spring	03G12_002	TO->FROM	HAYS PLANT - SOUTH HAYS 115KV CKT 1	83	99	0.037	106.0	0	KNOLL 230 - POSTROCK6 230.00 230KV CKT 1
Spring	03G12_002	FROM->TO	HARPER - MILAN TAP 138KV CKT 1	95.6	95.6	0.038	105.6	0	HOOVER NORTH - LAKERIDGE 138KV CKT 1
Spring	03G12_002	FROM->TO	HARPER - MILAN TAP 138KV CKT 1	95.6	95.6	0.044	105.2	0	MIDW-CATB05
Spring	03G12_002	FROM->TO	HARPER - MILAN TAP 138KV CKT 1	95.6	95.6	0.044	105.1	0	HUNTSVILLE - ST_JOHN 115KV CKT 1
Spring	03G12_002	FROM->TO	HARPER - MILAN TAP 138KV CKT 1	95.6	95.6	0.038	105.1	0	SPP-WERE-32
Spring	03G12_002	FROM->TO	HARPER - MILAN TAP 138KV CKT 1	95.6	95.6	0.038	104.8	0	CENTENNIAL - COWSKIN 138KV CKT 1
Spring	03G12_002	FROM->TO	HARPER - MILAN TAP 138KV CKT 1	95.6	95.6	0.039	104.7	0	SPP-SWPS-03
Spring	03G12_002	FROM->TO	HARPER - MILAN TAP 138KV CKT 1	95.6	95.6	0.038	104.4	0	EMPORIA ENERGY CENTER - WICHITA 345KV CKT 1
Spring	03G12_002	FROM->TO	HARPER - MILAN TAP 138KV CKT 1	95.6	95.6	0.038	104.4	0	GEN514805 1-SOONER UNIT 1
Spring	03G12_002	FROM->TO	HARPER - MILAN TAP 138KV CKT 1	95.6	95.6	0.039	104.3	0	GRAPEVINE INTERCHANGE - STATELINE INTERCHANGE 230KV CKT 1
Spring	03G12_002	FROM->TO	HARPER - MILAN TAP 138KV CKT 1	95.6	95.6	0.038	104.2	0	ROSE HILL - WOLF CREEK 345KV CKT 1
Spring	03G12_002	FROM->TO	HARPER - MILAN TAP 138KV CKT 1	95.6	95.6	0.044	104.1	0	HUNTSVILLE - HUTCHINSON ENERGY CENTER 115KV CKT 1
Spring	03G12_002	FROM->TO	HARPER - MILAN TAP 138KV CKT 1	95.6	95.6	0.038	104.1	0	GEN514806 1-SOONER UNIT 2
Spring	03G12_002	FROM->TO	HARPER - MILAN TAP 138KV CKT 1	95.6	95.6	0.038	103.8	0	CENTENNIAL - WACO 138KV CKT 1
Spring	03G12_002	FROM->TO	HARPER - MILAN TAP 138KV CKT 1	95.6	95.6	0.030	103.8	0	BUCKNER7 345.00 - HOLCOMB 345KV CKT 1
Spring	03G12_002	FROM->TO	HARPER - MILAN TAP 138KV CKT 1	95.6	95.6	0.039	103.7	0	GRAND ISLAND - SWEETWATER 345KV CKT 1
Spring	03G12_002	FROM->TO	HARPER - MILAN TAP 138KV CKT 1	95.6	95.6	0.040	103.7	0	Hitchland Interchange (H TB80155502) 345/230/13.2KV TRANSFORMER CKT 1
Spring	03G12_002	FROM->TO	HARPER - MILAN TAP 138KV CKT 1	95.6	95.6	0.041	103.7	0	POTTER COUNTY INTERCHANGE (WAUK 90343-A) 345/230/13.2KV TRANSFORMER CKT 1
Spring	03G12_002	FROM->TO	HARPER - MILAN TAP 138KV CKT 1	95.6	95.6	0.038	103.5	0	RENO COUNTY - SUMMIT 345KV CKT 1
Spring	03G12_002	FROM->TO	HARPER - MILAN TAP 138KV CKT 1	95.6	95.6	0.042	103.4	0	KNOLL 230 - SMOKYHL6 230.00 230KV CKT 1

Season	Dispatch Group	Flow	Monitored Element	RATEA (MVA)	RATEB (MVA)	TDF	TC% LOADING	ATC Available	Contingency
Spring	03G12_002	FROM->TO	MOUNDRIDGE (MOUND10X) 138/115/13.8KV TRANSFORMER CKT 1	100	110	0.046	100.7	0	RENO COUNTY - WICHITA 345KV CKT 1
Spring	03G12_002	FROM->TO	MOUNDRIDGE (MOUND10X) 138/115/13.8KV TRANSFORMER CKT 1	100	110	0.046	100.7	0	RENO COUNTY - WICHITA 345KV CKT 1
Spring	03G12_002	TO->FROM	CLEARWATER - MILAN TAP 138KV CKT 1	110	110	0.054	100.1	0	SPP-SWPS-05
Spring	03G12_002	TO->FROM	CLEARWATER - MILAN TAP 138KV CKT 1	110	110	0.054	100.1	0	FINNEY SWITCHING STATION - Hitchland Interchange 345KV CKT 1
Spring	03G12_002	FROM->TO	HARPER - MILAN TAP 138KV CKT 1	95.6	95.6	0.038	100.0	0	BASE CASE

Stability Analysis

Transient stability analysis is used to determine if the transmission system can maintain angular stability and ensure bus voltages stay within planning criteria bandwidth during and after a disturbance while considering the addition of a generator interconnection request.

Model Preparation

Transient stability analysis was performed using modified versions of the 2012 series of Model Development Working Group (MDWG) dynamic study models including the 2014 summer and 2013 winter peak dynamic cases. The cases were adapted to resemble the power flow study cases with regards to prior queued generation requests and topology. Finally the prior queued and study generation was dispatched into the SPP footprint. Initial simulations are then carried out for a no-disturbance run of twenty (20) seconds to verify the numerical stability of the model.

Disturbances

The ninety-eight (98) contingencies were identified for the Limited Operation scenario for use in this study. These faults are listed within Table 8. These contingencies included three-phase faults and single-phase line faults at locations defined by SPP. Single-phase line faults were simulated by applying fault impedance to the positive sequence network at the fault location to represent the effect of the negative and zero sequence networks on the positive sequence network. The fault impedance was computed to give a positive sequence voltage at the specified fault location of approximately 60% of pre-fault voltage. This method is in agreement with SPP current practice.

With exception to transformers, the typical sequence of events for a three-phase and single-phase fault is as follows:

1. apply fault at particular location
2. continue fault for five (5) cycles, clear the fault by tripping the faulted facility
3. after an additional twenty (20) cycles, re-close the previous facility back into the fault
4. continue fault for five (5) additional cycles
5. trip the faulted facility and remove the fault

Transformer faults are typically only performed for three-phase faults, unless otherwise noted. Additionally the sequence of events for a transformer is to 1) apply a three-phase fault for five (5) cycles and 2) clear the fault by tripping the affected transformer facility. Unless otherwise noted there will be no re-closing into a transformer fault.

Table 8: Contingencies Evaluated for Limited Operation

	Contingency Number and Name	Description
1	FLT_01_G1202TAP_PILE_115kV_3PH	*3-Phase fault on the GEN-2012-002 Tap – Pile 115kV line near the GEN-2012-002 Tap 115kV bus.*
2	FLT_02_G1202TAP_PILE_115kV_1PH	*Single-phase fault similar to previous fault.*
3	FLT_03_G1202TAP_SCOTTCITY3_115kV_3PH	*3-Phase fault on the GEN-2012-002 Tap – Scott City 115kV line near the GEN-2012-002 Tap 115kV bus*
4	FLT_04_G1202TAP_SCOTTCITY3_115kV_1PH	*Single-phase fault similar to previous fault.*
5	FLT_05_DOBSON_GANO_115kV_3PH	*3-Phase fault on the Dobson – Gano 115kV line near the Dobson 115kV bus.*
6	FLT_06_DOBSON_GANO_115kV_1PH	*Single-phase fault similar to previous fault.*
7	FLT_07_DOBSON_MORRIS_115kV_3PH	*3-Phase fault on the Dobson – Morris 115kV line near the Dobson 115kV bus.*
8	FLT_08_DOBSON_MORRIS_115kV_1PH	*Single-phase fault similar to previous fault.*
9	FLT_09_DOBSON_KSAVWTP3_115kV_3PH	*3-Phase fault on the Dobson – Kansas Ave Water Treatment Plant 115kV line near the Dobson 115kV bus.*
10	FLT_10_DOBSON_KSAVWTP3_115kV_1PH	*Single-phase fault similar to previous fault.*
11	FLT_11_DOBSON_LOWETAP3_115kV_3PH	*3-Phase fault on the Dobson – Lowe Tap 115kV line near the Dobson 115kV bus.*
12	FLT_12_DOBSON_LOWETAP3_115kV_1PH	*Single-phase fault similar to previous fault.*
13	FLT_13_SCOTTCITY3_SETAB_115kV_3PH	*3-Phase fault on the Scott City – Setab 115kV line near the Scott City 115kV bus.*
14	FLT_14_SCOTTCITY3_SETAB_115kV_1PH	*Single-phase fault similar to previous fault.*
15	FLT_15_SCOTTCITY3_MANNGTAP_115kV_3PH	*3-Phase fault on the Scott City – Manning Tap 115kV line near the Scott City 115kV bus.*
16	FLT_16_SCOTTCITY3_MANNGTAP_115kV_1PH	*Single-phase fault similar to previous fault.*
17	FLT_17_SETAB3_CTYSERV_115kV_3PH	*3-Phase fault on the Setab – City Service 115kV line near the Setab 115kV bus.*
18	FLT_18_SETAB3_CTYSERV_115kV_1PH	*Single-phase fault similar to previous fault.*
19	FLT_19_RUBART_SATATAP2_115kV_3PH	*3-Phase fault on the Rubart – Satanta Tap 115kV line near the Rubart 115kV bus.*
20	FLT_20_RUBART_SATATAP2_115kV_1PH	*Single-phase fault similar to previous fault.*
21	FLT_21_RUBART_HICKOCK_115kV_3PH	*3-Phase fault on the Rubart – Hickock 115kV line near the Rubart 115kV bus.*
22	FLT_22_RUBART_HICKOCK_115kV_1PH	*Single-phase fault similar to previous fault.*
23	FLT_23_SATATAP3_SATANTA3_115kV_3PH	*3-Phase fault on the Satanta Tap – Satanta 115kV line near the Satanta Tap 115kV bus.*
24	FLT_24_SATATAP3_SATANTA3_115kV_1PH	*Single-phase fault similar to previous fault.*
25	FLT_25_SATATAP3_PIONTAP3_115kV_3PH	*3-Phase fault on the Satanta Tap – Pioneer Tap 115kV line near the Satanta Tap 115kV bus.*
26	FLT_25_SATATAP3_PIONTAP3_115kV_1PH	*Single-phase fault similar to previous fault.*
27	FLT_27_PIONTAP3_PLYMELL_115kV_3PH	*3-Phase fault on the Pioneer Tap – Plymell Switch 115kV line near the Pioneer Tap 115kV bus.*
28	FLT_28_PIONTAP3_PLYMELL_115kV_1PH	*Single-phase fault similar to previous fault.*
29	FLT_29_PIONTAP3_SUBLETE_115kV_3PH	*3-Phase fault on the Pioneer Tap – Sublette 115kV line near the Pioneer Tap 115kV bus.*
30	FLT_30_PIONTAP3_SUBLETE_115kV_1PH	*Single-phase fault similar to previous fault.*
31	FLT_31_PLYMELL_HOLCOMB3_115kV_3PH	*3-Phase fault on the Plymell Switch – Holcomb 115kV line near the Plymell Switch 115kV bus.*
32	FLT_32_PLYMELL_HOLCOMB3_115kV_1PH	*Single-phase fault similar to previous fault.*
33	FLT_33_PLYMELL_PIERCVL3_115kV_3PH	*3-Phase fault on the Plymell Switch – Pierceville 115kV line near the Plymell Switch 115kV bus.*
34	FLT_34_PLYMELL_PIERCVL3_115kV_1PH	*Single-phase fault similar to previous fault.*
35	FLT_35_HOLCOMB3_GRDNCTY_115kV_3PH	*3-Phase fault on the Holcomb – Garden City 115kV line near the Holcomb 115kV bus.*
36	FLT_36_HOLCOMB3_GRDNCTY_115kV_1PH	*Single-phase fault similar to previous fault.*
37	FLT_37_HOLCOMB3_JONES3_115kV_3PH	*3-Phase fault on the Holcomb – Jones 115kV line near the Holcomb 115kV bus.*

Contingency Number and Name		Description
38	FLT_38_HOLCOMB3_JONES3_115kV_1PH	*Single-phase fault similar to previous fault.*
39	FLT_39_HOLCOMB3_FLETCHR3_115kV_3PH	*3-Phase fault on the Holcomb – Fletcher 115kV line near the Holcomb 115kV bus.*
40	FLT_40_HOLCOMB3_FLETCHR3_115kV_1PH	*Single-phase fault similar to previous fault.*
41	FLT_41_HICKOCK_AMOCO3_115kV_3PH	*3-Phase fault on the Hickock – Amoco 115kV line near the Hickock 115kV bus.*
42	FLT_42_HICKOCK_AMOCO3_115kV_1PH	*Single-phase fault similar to previous fault.*
43	FLT_43_HICKOCK_PIONEER3_115kV_3PH	*3-Phase fault on the Hickock – Pioneer 115kV line near the Hickock 115kV bus.*
44	FLT_44_HICKOCK_PIONEER3_115kV_1PH	*Single-phase fault similar to previous fault.*
45	FLT_45_PIONEER3_PKGOAB3_115kV_3PH	*3-Phase fault on the Pioneer – Puckett 115kV line near the Pioneer 115kV bus.*
46	FLT_46_PIONEER3_PKGOAB3_115kV_1PH	*Single-phase fault similar to previous fault.*
47	FLT_47_PIONEER3_GRANTTP3_115kV_3PH	*3-Phase fault on the Pioneer – Grant Tap 115kV line near the Pioneer 115kV bus.*
48	FLT_48_PIONEER3_GRANTTP3_115kV_1PH	*Single-phase fault similar to previous fault.*
49	FLT_49_PIONEER3_ULYSPLT3_115kV_3PH	*3-Phase fault on the Pioneer – Ulysses Plant 115kV line near the Pioneer 115kV bus.*
50	FLT_50_PIONEER3_ULYSPLT3_115kV_1PH	*Single-phase fault similar to previous fault.*
51	FLT_51_PIONEER2_ULUE_69kV_3PH	*3-Phase fault on the Pioneer – Ulysses East 69kV line near the Pioneer 115kV bus.*
52	FLT_52_PIONEER2_ULUE_69kV_1PH	*Single-phase fault similar to previous fault.*
53	FLT_53_PIONEER3_ULUNW_69kV_3PH	*3-Phase fault on the Pioneer – Ulysses Northwest 69kV line near the Pioneer 115kV bus.*
54	FLT_54_PIONEER3_ULUNW_69kV_1PH	*Single-phase fault similar to previous fault.*
55	FLT_55_ASGI1206T_ROLLA_69kV_3PH	*3-Phase fault on the ASGI-2012-006 Tap – Rolla 69kV line near the ASGI-2012-006 Tap 69kV bus.*
56	FLT_56_ASGI1206T_ROLLA_69kV_1PH	*Single-phase fault similar to previous fault.*
57	FLT_57_HUGOTON2_CHUGTON2_69kV_3PH	*3-Phase fault on the Hugoton – Hugoton City 69kV line near the Hugoton 69kV bus.*
58	FLT_58_HUGOTON2_CHUGTON2_69kV_1PH	*Single-phase fault similar to previous fault.*
59	FLT_59_HUGOTON3_GRANTTP3_115kV_3PH	*3-Phase fault on the Hugoton – Grant Tap 115kV line near the Hugoton 115kV bus.*
60	FLT_60_HUGOTON3_GRANTTP3_115kV_1PH	*Single-phase fault similar to previous fault.*
61	FLT_61_HUGOTON3_WALKMYR3_115kV_3PH	*3-Phase fault on the Hugoton – Walkemeyer 115kV line near the Hugoton 115kV bus.*
62	FLT_62_HUGOTON3_WALKMYR3_115kV_1PH	*Single-phase fault similar to previous fault.*
63	FLT_63_GRANTTP3_GRANT3_115kV_3PH	*3-Phase fault on the Grant Tap – Grant 115kV line near the Grant Tap 115kV bus.*
64	FLT_64_GRANTTP3_GRANT3_115kV_1PH	*Single-phase fault similar to previous fault.*
65	FLT_65_WALKMYR3_CIMPLT3_115kV_3PH	*3-Phase fault on the Walkemeyer – Cimarron River Station 115kV line near the Walkemeyer 115kV bus.*
66	FLT_66_WALKMYR3_CIMPLT3_115kV_1PH	*Single-phase fault similar to previous fault.*
67	FLT_67_WALKMYR3_NORTH6T2_69kV_3PH	*3-Phase fault on the Walkemeyer – Northern Tap 69kV line near the Walkemeyer 69kV bus.*
68	FLT_68_WALKMYR3_NORTH6T2_69kV_1PH	*Single-phase fault similar to previous fault.*
69	FLT_69_WALKMYR3_WOODS_69kV_3PH	*3-Phase fault on the Walkemeyer – Woods 69kV line near the Walkemeyer 69kV bus.*
70	FLT_70_WALKMYR3_WOODS_69kV_1PH	*Single-phase fault similar to previous fault.*
71	FLT_71_SETAB7_MINGO7_345kV_3PH	*3-Phase fault on the Setab – Mingo 345kV line near the Setab 345kV bus.*
72	FLT_72_SETAB7_MINGO7_345kV_1PH	*Single-phase fault similar to previous fault.*
73	FLT_73_SETAB7_HOLCOMB7_345kV_3PH	*3-Phase fault on the Setab – Holcomb 345kV line near the Setab 345kV bus.*
74	FLT_74_SETAB7_HOLCOMB7_345kV_1PH	*Single-phase fault similar to previous fault.*
75	FLT_75_MINGO7_REDWILLOW_345kV_3PH	*3-Phase fault on the Mingo – Red Willow 345kV line near the Mingo 345kV bus.*
76	FLT_76_MINGO7_REDWILLOW_345kV_1PH	*Single-phase fault similar to previous fault.*

	Contingency Number and Name	Description
77	FLT_77_HOLCOMB7_FINNEY7_345kV_3PH	*3-Phase fault on the Holcomb – Finney 345kV line near the Holcomb 345kV bus.*
78	FLT_78_HOLCOMB7_FINNEY7_345kV_1PH	*Single-phase fault similar to previous fault.*
79	FLT_79_HOLCOMB7_BUCKNER_345kV_3PH	*3-Phase fault on the Holcomb – Buckner 345kV line near the Holcomb 345kV bus.*
80	FLT_80_HOLCOMB7_BUCKNER_345kV_1PH	*Single-phase fault similar to previous fault.*
81	FLT_81_HOLCOMB3_PLYMELL_115kV_3PH	*3-Phase fault on the Holcomb – Plymell 115kV line near the Holcomb 115kV bus.*
82	FLT_82_HOLCOMB3_PLYMELL_115kV_1PH	*Single-phase fault similar to previous fault.*
83	FLT_83_FINNEY_HITCHLND7_345kV_3PH	*3-Phase fault on the Finney – Hitchland 345kV line near the Finney 345kV bus.*
84	FLT_84_FINNEY_HITCHLND7_345kV_1PH	*Single-phase fault similar to previous fault.*
85	FLT_85_SPEARVLL7_BUCKNER_345kV_3PH	*3-Phase fault on the Spearville – Buckner 345kV line near the Spearville 345kV bus.*
86	FLT_86_SPEARVLL7_BUCKNER_345kV_1PH	*Single-phase fault similar to previous fault.*
87	FLT_87_SPEARVLL7_POSTRCK7_345kV_3PH	*3-Phase fault on the Spearville – Post Rock 345kV line near the Spearville 345kV bus.*
88	FLT_88_SPEARVLL7_POSTRCK7_345kV_1PH	*Single-phase fault similar to previous fault.*
89	FLT_89_POSTRCK7_AXTELL_345kV_3PH	*3-Phase fault on the Post Rock – Axtell 345kV line near the Post Rock 345kV bus.*
90	FLT_90_POSTRCK7_AXTELL_345kV_1PH	*Single-phase fault similar to previous fault.*
91	FLT_91_SCOTTCITY3_SCOTTCTY2_115_69kV_3PH	*3-Phase fault on the Scott City 115kV – Scott City 69 kV transformer near the Scott City 115kV bus.*
92	FLT_92_SETAB7_SETAB3_345_115kV_3PH	*3-Phase fault on the Setab 345kV – Setab 115 kV transformer near the Setab 115kV bus.*
93	FLT_93_HOLCOMB7_HOLCOMB3_345_115kV_3PH	*3-Phase fault on the Holcomb 345kV – Holcomb 115kV transformer near the Holcomb 345kV bus.*
94	FLT_94_SPEARVLL7_SPEARVLL6_345_230kV_3PH	*3-Phase fault on the Spearville 345kV – Spearville 230kV line near the Spearville 345kV bus.*
95	FLT_95_POSTRCK7_POSTRCK6_345_230kV_3PH	*3-Phase fault on the Post Rock 345kV – Post Rock 230kV line near the Post Rock 345kV bus.*
96	FLT_96_HICKOCK3_HICKOCK2_115_69kV_3PH	*3-Phase fault on the Hickock 115kV – Hickock 69kV line near the Hickock 115kV bus.*
97	FLT_97_PIONEER3_PIONEER2_115_69kV_3PH	*3-Phase fault on the Pioneer 115kV – Pioneer 69kV line near the Pioneer 115kV bus*
98	FLT_98_WALKMYR3_WALKMYR2_115_69kV_3PH	*3-Phase fault on the Walkemeyer 115kV – Walkemeyer 69kV line near the Walkemeyer 115kV bus*

Results

Results of the stability analysis are summarized in Table 9. These results are valid for Customers interconnecting with a generation amount up to 243.7 MW with reactive equipment. The results indicate that the transmission system remains stable for all contingencies studied. The plots will be available upon request.

Table 9: Fault Analysis Results for Limited Operation

	Contingency Number and Name	2014SP	2013WP
1	FLT_01_G1202TAP_PILE_115kV_3PH	STABLE	STABLE
2	FLT_02_G1202TAP_PILE_115kV_1PH	STABLE	STABLE
3	FLT_03_G1202TAP_SCOTTCITY3_115kV_3PH	STABLE	STABLE
4	FLT_04_G1202TAP_SCOTTCITY3_115kV_1PH	STABLE	STABLE
5	FLT_05_DOBSON_GANO_115kV_3PH	STABLE	STABLE
6	FLT_06_DOBSON_GANO_115kV_1PH	STABLE	STABLE

	Contingency Number and Name	2014SP	2013WP
7	FLT_07_DOBSON_MORRIS_115kV_3PH	STABLE	STABLE
8	FLT_08_DOBSON_MORRIS_115kV_1PH	STABLE	STABLE
9	FLT_09_DOBSON_KSAVWTP3_115kV_3PH	STABLE	STABLE
10	FLT_10_DOBSON_KSAVWTP3_115kV_1PH	STABLE	STABLE
11	FLT_11_DOBSON_LOWETAP3_115kV_3PH	STABLE	STABLE
12	FLT_12_DOBSON_LOWETAP3_115kV_1PH	STABLE	STABLE
13	FLT_13_SCOTTCITY3_SETAB_115kV_3PH	STABLE	STABLE
14	FLT_14_SCOTTCITY3_SETAB_115kV_1PH	STABLE	STABLE
15	FLT_15_SCOTTCITY3_MANNGTAP_115kV_3PH	STABLE	STABLE
16	FLT_16_SCOTTCITY3_MANNGTAP_115kV_1PH	STABLE	STABLE
17	FLT_17_SETAB3_CTYSERV_115kV_3PH	STABLE	STABLE
18	FLT_18_SETAB3_CTYSERV_115kV_1PH	STABLE	STABLE
19	FLT_19_RUBART_SATATAP2_115kV_3PH	STABLE	STABLE
20	FLT_20_RUBART_SATATAP2_115kV_1PH	STABLE	STABLE
21	FLT_21_RUBART_HICKOCK_115kV_3PH	STABLE	STABLE
22	FLT_22_RUBART_HICKOCK_115kV_1PH	STABLE	STABLE
23	FLT_23_SATATAP3_SATANTA3_115kV_3PH	STABLE	STABLE
24	FLT_24_SATATAP3_SATANTA3_115kV_1PH	STABLE	STABLE
25	FLT_25_SATATAP3_PIONTAP3_115kV_3PH	STABLE	STABLE
26	FLT_25_SATATAP3_PIONTAP3_115kV_1PH	STABLE	STABLE
27	FLT_27_PIONTAP3_PLYMELL_115kV_3PH	STABLE	STABLE
28	FLT_28_PIONTAP3_PLYMELL_115kV_1PH	STABLE	STABLE
29	FLT_29_PIONTAP3_SUBLETE_115kV_3PH	STABLE	STABLE
30	FLT_30_PIONTAP3_SUBLETE_115kV_1PH	STABLE	STABLE
31	FLT_31_PLYMELL_HOLCOMB3_115kV_3PH	STABLE	STABLE
32	FLT_32_PLYMELL_HOLCOMB3_115kV_1PH	STABLE	STABLE
33	FLT_33_PLYMELL_PIERCVL3_115kV_3PH	STABLE	STABLE
34	FLT_34_PLYMELL_PIERCVL3_115kV_1PH	STABLE	STABLE
35	FLT_35_HOLCOMB3_GRDNCTY_115kV_3PH	STABLE	STABLE
36	FLT_36_HOLCOMB3_GRDNCTY_115kV_1PH	STABLE	STABLE
37	FLT_37_HOLCOMB3_JONES3_115kV_3PH	STABLE	STABLE
38	FLT_38_HOLCOMB3_JONES3_115kV_1PH	STABLE	STABLE
39	FLT_39_HOLCOMB3_FLETCHR3_115kV_3PH	STABLE	STABLE
40	FLT_40_HOLCOMB3_FLETCHR3_115kV_1PH	STABLE	STABLE
41	FLT_41_HICKOCK_AMOCO3_115kV_3PH	STABLE	STABLE
42	FLT_42_HICKOCK_AMOCO3_115kV_1PH	STABLE	STABLE
43	FLT_43_HICKOCK_PIONEER3_115kV_3PH	STABLE	STABLE
44	FLT_44_HICKOCK_PIONEER3_115kV_1PH	STABLE	STABLE
45	FLT_45_PIONEER3_PKGOAB3_115kV_3PH	STABLE	STABLE
46	FLT_46_PIONEER3_PKGOAB3_115kV_1PH	STABLE	STABLE
47	FLT_47_PIONEER3_GRANTTP3_115kV_3PH	STABLE	STABLE
48	FLT_48_PIONEER3_GRANTTP3_115kV_1PH	STABLE	STABLE
49	FLT_49_PIONEER3_ULYSPLT3_115kV_3PH	STABLE	STABLE
50	FLT_50_PIONEER3_ULYSPLT3_115kV_1PH	STABLE	STABLE
51	FLT_51_PIONEER2_ULUE_69kV_3PH	STABLE	STABLE
52	FLT_52_PIONEER2_ULUE_69kV_1PH	STABLE	STABLE
53	FLT_53_PIONEER3_ULUNW_69kV_3PH	STABLE	STABLE
54	FLT_54_PIONEER3_ULUNW_69kV_1PH	STABLE	STABLE
55	FLT_55_ASGI1206T_ROLLA_69kV_3PH	STABLE	STABLE
56	FLT_56_ASGI1206T_ROLLA_69kV_1PH	STABLE	STABLE
57	FLT_57_HUGOTON2_CHUGTON2_69kV_3PH	STABLE	STABLE
58	FLT_58_HUGOTON2_CHUGTON2_69kV_1PH	STABLE	STABLE
59	FLT_59_HUGOTON3_GRANTTP3_115kV_3PH	STABLE	STABLE
60	FLT_60_HUGOTON3_GRANTTP3_115kV_1PH	STABLE	STABLE
61	FLT_61_HUGOTON3_WALKMYR3_115kV_3PH	STABLE	STABLE
62	FLT_62_HUGOTON3_WALKMYR3_115kV_1PH	STABLE	STABLE
63	FLT_63_GRANTTP3_GRANT3_115kV_3PH	STABLE	STABLE

	Contingency Number and Name	2014SP	2013WP
64	FLT_64_GRANTTP3_GRANT3_115kV_1PH	STABLE	STABLE
65	FLT_65_WALKMYR3_CIMPLT3_115kV_3PH	STABLE	STABLE
66	FLT_66_WALKMYR3_CIMPLT3_115kV_1PH	STABLE	STABLE
67	FLT_67_WALKMYR3_NORTH6T2_69kV_3PH	STABLE	STABLE
68	FLT_68_WALKMYR3_NORTH6T2_69kV_1PH	STABLE	STABLE
69	FLT_69_WALKMYR3_WOODS_69kV_3PH	STABLE	STABLE
70	FLT_70_WALKMYR3_WOODS_69kV_1PH	STABLE	STABLE
71	FLT_71_SETAB7_MINGO7_345kV_3PH	STABLE	STABLE
72	FLT_72_SETAB7_MINGO7_345kV_1PH	STABLE	STABLE
73	FLT_73_SETAB7_HOLCOMB7_345kV_3PH	STABLE	STABLE
74	FLT_74_SETAB7_HOLCOMB7_345kV_1PH	STABLE	STABLE
75	FLT_75_MINGO7_REDWILLOW_345kV_3PH	STABLE	STABLE
76	FLT_76_MINGO7_REDWILLOW_345kV_1PH	STABLE	STABLE
77	FLT_77_HOLCOMB7_FINNEY7_345kV_3PH	STABLE	STABLE
78	FLT_78_HOLCOMB7_FINNEY7_345kV_1PH	STABLE	STABLE
79	FLT_79_HOLCOMB7_BUCKNER_345kV_3PH	STABLE	STABLE
80	FLT_80_HOLCOMB7_BUCKNER_345kV_1PH	STABLE	STABLE
81	FLT_81_HOLCOMB3_PLYMELL_115kV_3PH	STABLE	STABLE
82	FLT_82_HOLCOMB3_PLYMELL_115kV_1PH	STABLE	STABLE
83	FLT_83_FINNEY_HITCHLND7_345kV_3PH	STABLE	STABLE
84	FLT_84_FINNEY_HITCHLND7_345kV_1PH	STABLE	STABLE
85	FLT_85_SPEARVLL7_BUCKNER_345kV_3PH	STABLE	STABLE
86	FLT_86_SPEARVLL7_BUCKNER_345kV_1PH	STABLE	STABLE
87	FLT_87_SPEARVLL7_POSTRCK7_345kV_3PH	STABLE	STABLE
88	FLT_88_SPEARVLL7_POSTRCK7_345kV_1PH	STABLE	STABLE
89	FLT_89_POSTRCK7_AXTELL_345kV_3PH	STABLE	STABLE
90	FLT_90_POSTRCK7_AXTELL_345kV_1PH	STABLE	STABLE
91	FLT_91_SCOTTCITY3_SCOTTCTY2_115_69kV_3PH	STABLE	STABLE
92	FLT_92_SETAB7_SETAB3_345_115kV_3PH	STABLE	STABLE
93	FLT_93_HOLCOMB7_HOLCOMB3_345_115kV_3PH	STABLE	STABLE
94	FLT_94_SPEARVLL7_SPEARVLL6_345_230kV_3PH	STABLE	STABLE
95	FLT_95_POSTRCK7_POSTRCK6_345_230kV_3PH	STABLE	STABLE
96	FLT_96_HICKOCK3_HICKOCK2_115_69kV_3PH	STABLE	STABLE
97	FLT_97_PIONEER3_PIONEER2_115_69kV_3PH	STABLE	STABLE
98	FLT_98_WALKMYR3_WALKMYR2_115_69kV_3PH	STABLE	STABLE

FERC LVRT Compliance

FERC Order #661A places specific requirements on wind farms through its Low Voltage Ride Through (LVRT) provisions. For Interconnection Agreements signed after December 31, 2006, wind farms shall stay on line for faults at the POI that draw the voltage down at the POI to 0.0 pu.

Fault contingencies were developed to verify that wind farms remain on line when the POI voltage is drawn down to 0.0 pu. These contingencies are shown in Table 10.

Table 10: LVRT Contingencies

	Contingency Number and Name	Description
1	FLT_01_G1202TAP_PILE_115kV_3PH	*3-Phase fault on the GEN-2012-002 Tap – Pile 115kV line near the GEN-2012-002 Tap 115kV bus.*
2	FLT_02_G1202TAP_PILE_115kV_1PH	*Single-phase fault similar to previous fault.*
3	FLT_19_RUBART_SATATAP2_115kV_3PH	*3-Phase fault on the Rubart – Satanta Tap 115kV line near the Rubart 115kV bus.*
4	FLT_21_RUBART_HICKOCK_115kV_3PH	*3-Phase fault on the Rubart – Hickock 115kV line near the Rubart 115kV bus.*

	Contingency Number and Name	Description
5	FLT_55_ASGI1206T_ROLLA_69kV_3PH	*3-Phase fault on the ASGI-2012-006 Tap – Rolla 69kV line near the ASGI-2012-006 Tap 69kV bus.*
6	FLT_57_HUGOTON2_CHUGTON2_69kV_3PH	*3-Phase fault on the Hugoton – Hugoton City 69kV line near the Hugoton 69kV bus.*

The required prior queued project wind farms remained online for the fault contingencies described in this section as well as the fault contingencies described in the Disturbances section of this report. The Customers are found to be in compliance with FERC Order #661A.

Conclusion

<OMITTED TEXT> (Interconnection Customers, GEN-2012-002, GEN-2012-007 and ASGI-2012-006) have requested a Limited Operation System Impact Study under the Southwest Power Pool Open Access Transmission Tariff (OATT) for 243.7 MW of combustion and wind generation to be interconnected as an Energy Resource (ER) into the Transmission System of Sunflower Electric Power Corporation (SUNC) in Scott and Grant Counties, Kansas. ASGI-2012-006 is located Stevens County, Kansas in the Pioneer Electric Cooperative system and is embedded in the Sunflower Electric Power Corporation (SUNC) Transmission System. The point of interconnection for GEN-2012-002 will be a tap on the Scott City – Pile 115kV transmission line. The point of interconnection for GEN-2012-007 will be through a new substation into a tap on the Hickock – Satanta Tap 115kV transmission line. The point of interconnection for ASGI-2012-006 will be through a tap on the Hugoton – Rolla 69kV transmission line. The Customers, under GIA Section 5.9, has requested this Limited Operation Interconnection Study (LOIS) to determine the impacts of interconnecting to the transmission system before all required Network Upgrades identified in the DISIS-2012-001 (or most recent iteration) Impact Study can be placed into service.

Power flow analysis from this LOIS has determined that the Customers request can interconnect a limited amount of generation as an Energy Resource prior to the completion of the required Network Upgrades, listed within Table 2 of this report. Refer to Tables 4, 5 and 6 for the Limited Operation Interconnection Service available due to interconnection constraints.

Transient stability analysis indicates that the transmission system will remain stable for the contingencies listed within Table 8 with the addition of the Customers generation. Additionally, the Customers were found to be in compliance with FERC Order #661A when studied as listed within this report.

Any changes to these assumptions, for example, one or more of the previously queued requests not included within this study execute an interconnection agreement and commencing commercial operation, may require a re-study of this LOIS at the expense of the Customer or Customers.

Nothing in this System Impact Study constitutes a request for transmission service or confers upon the Interconnection Customer any right to receive transmission service.

A. Additional Constraints Maximum Wind Scenario (Not for Mitigation)

See next page.

SEASON	GROUP	DIRECTION	MONITORED ELEMENT	RATE A (MVA)	RATE B (MVA)	TDF	TC%LOADING (%MVA)	CONTINGENCY NAME
13G	03ALL	'FROM->TO'	'SMOKYHL6 230.00 - SUMMIT 230KV CKT 1'	319	319	0.18549	105.2293	'BASE CASE'
13G	03ALL	'FROM->TO'	'SMOKYHL6 230.00 - SUMMIT 230KV CKT 1'	319	319	0.08979	105.2293	'BASE CASE'
13G	03ALL	'FROM->TO'	'SMOKYHL6 230.00 - SUMMIT 230KV CKT 1'	319	319	0.10326	105.2293	'BASE CASE'
13G	03ALL	'FROM->TO'	'SMOKYHL6 230.00 - SUMMIT 230KV CKT 1'	319	319	0.12225	105.2293	'BASE CASE'
13G	03ALL	'FROM->TO'	'SMOKYHL6 230.00 - SUMMIT 230KV CKT 1'	319	319	0.12225	105.2293	'BASE CASE'
13G	03ALL	'FROM->TO'	'SMOKYHL6 230.00 - SUMMIT 230KV CKT 1'	319	319	0.07803	105.2293	'BASE CASE'
13G	03ALL	'FROM->TO'	'SMOKYHL6 230.00 - SUMMIT 230KV CKT 1'	319	319	0.09991	105.2293	'BASE CASE'
13G	03ALL	'FROM->TO'	'SMOKYHL6 230.00 - SUMMIT 230KV CKT 1'	319	319	0.11509	105.2293	'BASE CASE'
13G	03ALL	'FROM->TO'	'SMOKYHL6 230.00 - SUMMIT 230KV CKT 1'	319	319	0.11509	105.2293	'BASE CASE'
13G	03ALL	'FROM->TO'	'SMOKYHL6 230.00 - SUMMIT 230KV CKT 1'	319	319	0.62637	105.2293	'BASE CASE'
13G	03ALL	'FROM->TO'	'SMOKYHL6 230.00 - SUMMIT 230KV CKT 1'	319	319	0.09991	105.2293	'BASE CASE'
13G	03ALL	'FROM->TO'	'SMOKYHL6 230.00 - SUMMIT 230KV CKT 1'	319	319	0.1274	105.2293	'BASE CASE'
13G	03ALL	'FROM->TO'	'SMOKYHL6 230.00 - SUMMIT 230KV CKT 1'	319	319	0.10261	105.2293	'BASE CASE'
13G	03ALL	'TO->FROM'	'CLEARWATER - MILAN TAP 138KV CKT 1'	110	110	0.03559	122.895	'BASE CASE'
13G	03ALL	'TO->FROM'	'CLEARWATER - MILAN TAP 138KV CKT 1'	110	110	0.06218	122.895	'BASE CASE'
13G	03ALL	'TO->FROM'	'CLEARWATER - MILAN TAP 138KV CKT 1'	110	110	0.10851	122.895	'BASE CASE'
13G	03ALL	'TO->FROM'	'CLEARWATER - MILAN TAP 138KV CKT 1'	110	110	0.04844	122.895	'BASE CASE'
13G	03ALL	'TO->FROM'	'CLEARWATER - MILAN TAP 138KV CKT 1'	110	110	0.04844	122.895	'BASE CASE'
13G	03ALL	'TO->FROM'	'CLEARWATER - MILAN TAP 138KV CKT 1'	110	110	0.2104	122.895	'BASE CASE'
13G	03ALL	'TO->FROM'	'CLEARWATER - MILAN TAP 138KV CKT 1'	110	110	0.03753	122.895	'BASE CASE'
13G	03ALL	'TO->FROM'	'CLEARWATER - MILAN TAP 138KV CKT 1'	110	110	0.0394	122.895	'BASE CASE'
13G	03ALL	'TO->FROM'	'CLEARWATER - MILAN TAP 138KV CKT 1'	110	110	0.0394	122.895	'BASE CASE'
13G	03ALL	'TO->FROM'	'CLEARWATER - MILAN TAP 138KV CKT 1'	110	110	0.52726	122.895	'BASE CASE'
13G	03ALL	'TO->FROM'	'CLEARWATER - MILAN TAP 138KV CKT 1'	110	110	0.03696	122.895	'BASE CASE'
13G	03ALL	'TO->FROM'	'CLEARWATER - MILAN TAP 138KV CKT 1'	110	110	0.04265	122.895	'BASE CASE'
13G	03ALL	'TO->FROM'	'CLEARWATER - MILAN TAP 138KV CKT 1'	110	110	0.03608	122.895	'BASE CASE'
13G	03ALL	'FROM->TO'	'GREENSBURG - SUN CITY 115KV CKT 1'	120.7	129.5	0.17753	106.3836	'BASE CASE'
13G	03ALL	'FROM->TO'	'GREENSBURG - SUN CITY 115KV CKT 1'	120.7	129.5	0.04472	106.3836	'BASE CASE'
13G	03ALL	'FROM->TO'	'GREENSBURG - SUN CITY 115KV CKT 1'	120.7	129.5	0.04472	106.3836	'BASE CASE'
13G	03ALL	'FROM->TO'	'GREENSBURG - SUN CITY 115KV CKT 1'	120.7	129.5	0.39904	106.3836	'BASE CASE'
13G	03ALL	'FROM->TO'	'GREENSBURG - SUN CITY 115KV CKT 1'	120.7	129.5	0.0299	106.3836	'BASE CASE'
13G	03ALL	'FROM->TO'	'GREENSBURG - SUN CITY 115KV CKT 1'	120.7	129.5	0.03411	106.3836	'BASE CASE'
13G	03ALL	'FROM->TO'	'GREENSBURG - SUN CITY 115KV CKT 1'	120.7	129.5	0.03411	106.3836	'BASE CASE'
13G	03ALL	'FROM->TO'	'GREENSBURG - SUN CITY 115KV CKT 1'	120.7	129.5	0.02996	106.3836	'BASE CASE'
13G	03ALL	'FROM->TO'	'GREENSBURG - SUN CITY 115KV CKT 1'	120.7	129.5	0.03691	106.3836	'BASE CASE'
13G	03ALL	'FROM->TO'	'GREENSBURG - SUN CITY 115KV CKT 1'	120.7	129.5	0.03126	106.3836	'BASE CASE'
13G	03ALL	'TO->FROM'	'GREENSBURG - SSTARTP3 115.00 115KV CKT 1	120.7	129.5	0.17753	114.8021	'BASE CASE'
13G	03ALL	'TO->FROM'	'GREENSBURG - SSTARTP3 115.00 115KV CKT 1	120.7	129.5	0.04472	114.8021	'BASE CASE'
13G	03ALL	'TO->FROM'	'GREENSBURG - SSTARTP3 115.00 115KV CKT 1	120.7	129.5	0.04472	114.8021	'BASE CASE'
13G	03ALL	'TO->FROM'	'GREENSBURG - SSTARTP3 115.00 115KV CKT 1	120.7	129.5	0.39904	114.8021	'BASE CASE'
13G	03ALL	'TO->FROM'	'GREENSBURG - SSTARTP3 115.00 115KV CKT 1	120.7	129.5	0.0299	114.8021	'BASE CASE'
13G	03ALL	'TO->FROM'	'GREENSBURG - SSTARTP3 115.00 115KV CKT 1	120.7	129.5	0.03411	114.8021	'BASE CASE'
13G	03ALL	'TO->FROM'	'GREENSBURG - SSTARTP3 115.00 115KV CKT 1	120.7	129.5	0.03411	114.8021	'BASE CASE'
13G	03ALL	'TO->FROM'	'GREENSBURG - SSTARTP3 115.00 115KV CKT 1	120.7	129.5	0.02996	114.8021	'BASE CASE'
13G	03ALL	'TO->FROM'	'GREENSBURG - SSTARTP3 115.00 115KV CKT 1	120.7	129.5	0.03691	114.8021	'BASE CASE'
13G	03ALL	'TO->FROM'	'GREENSBURG - SSTARTP3 115.00 115KV CKT 1	120.7	129.5	0.03126	114.8021	'BASE CASE'
13G	03ALL	'FROM->TO'	'HARPER - MILAN TAP 138KV CKT 1'	95.6	95.6	0.03559	148.7473	'BASE CASE'
13G	03ALL	'FROM->TO'	'HARPER - MILAN TAP 138KV CKT 1'	95.6	95.6	0.06218	148.7473	'BASE CASE'
13G	03ALL	'FROM->TO'	'HARPER - MILAN TAP 138KV CKT 1'	95.6	95.6	0.10851	148.7473	'BASE CASE'
13G	03ALL	'FROM->TO'	'HARPER - MILAN TAP 138KV CKT 1'	95.6	95.6	0.04844	148.7473	'BASE CASE'
13G	03ALL	'FROM->TO'	'HARPER - MILAN TAP 138KV CKT 1'	95.6	95.6	0.04844	148.7473	'BASE CASE'
13G	03ALL	'FROM->TO'	'HARPER - MILAN TAP 138KV CKT 1'	95.6	95.6	0.2104	148.7473	'BASE CASE'
13G	03ALL	'FROM->TO'	'HARPER - MILAN TAP 138KV CKT 1'	95.6	95.6	0.03753	148.7473	'BASE CASE'
13G	03ALL	'FROM->TO'	'HARPER - MILAN TAP 138KV CKT 1'	95.6	95.6	0.0394	148.7473	'BASE CASE'
13G	03ALL	'FROM->TO'	'HARPER - MILAN TAP 138KV CKT 1'	95.6	95.6	0.0394	148.7473	'BASE CASE'
13G	03ALL	'FROM->TO'	'HARPER - MILAN TAP 138KV CKT 1'	95.6	95.6	0.52726	148.7473	'BASE CASE'
13G	03ALL	'FROM->TO'	'HARPER - MILAN TAP 138KV CKT 1'	95.6	95.6	0.03696	148.7473	'BASE CASE'
13G	03ALL	'FROM->TO'	'HARPER - MILAN TAP 138KV CKT 1'	95.6	95.6	0.04265	148.7473	'BASE CASE'
13G	03ALL	'FROM->TO'	'HARPER - MILAN TAP 138KV CKT 1'	95.6	95.6	0.03608	148.7473	'BASE CASE'
13G	03ALL	'TO->FROM'	'MEDICINE LODGE - SUN CITY 115KV CKT 1'	120.7	129.5	0.17753	103.6298	'BASE CASE'
13G	03ALL	'TO->FROM'	'MEDICINE LODGE - SUN CITY 115KV CKT 1'	120.7	129.5	0.04472	103.6298	'BASE CASE'
13G	03ALL	'TO->FROM'	'MEDICINE LODGE - SUN CITY 115KV CKT 1'	120.7	129.5	0.04472	103.6298	'BASE CASE'
13G	03ALL	'TO->FROM'	'MEDICINE LODGE - SUN CITY 115KV CKT 1'	120.7	129.5	0.39904	103.6298	'BASE CASE'
13G	03ALL	'TO->FROM'	'MEDICINE LODGE - SUN CITY 115KV CKT 1'	120.7	129.5	0.0299	103.6298	'BASE CASE'

SEASON	GROUP	DIRECTION	MONITORED ELEMENT	RATE A (MVA)	RATE B (MVA)	TDF	TC%LOADING (%MVA)	CONTINGENCY NAME
13G	03ALL	'TO->FROM'	'MEDICINE LODGE - SUN CITY 115KV CKT 1'	120.7	129.5	0.03411	103.6298	'BASE CASE'
13G	03ALL	'TO->FROM'	'MEDICINE LODGE - SUN CITY 115KV CKT 1'	120.7	129.5	0.03411	103.6298	'BASE CASE'
13G	03ALL	'TO->FROM'	'MEDICINE LODGE - SUN CITY 115KV CKT 1'	120.7	129.5	0.02996	103.6298	'BASE CASE'
13G	03ALL	'TO->FROM'	'MEDICINE LODGE - SUN CITY 115KV CKT 1'	120.7	129.5	0.03691	103.6298	'BASE CASE'
13G	03ALL	'TO->FROM'	'MEDICINE LODGE - SUN CITY 115KV CKT 1'	120.7	129.5	0.03126	103.6298	'BASE CASE'
13G	03ALL	'FROM->TO'	'GYCOTAP3 115.00 - WEST DODGE 115KV CKT 1'	95.1	95.1	0.99526	105.7119	'BASE CASE'
13G	03ALL	'FROM->TO'	'GRAY CO3 115.00 - GYCOTAP3 115.00 115KV CKT 1	95.1	95.1	0.99526	115.1077	'BASE CASE'
13G	03ALL	'FROM->TO'	'SPEARVILLE (SPWIND 1) 230/34.5/13.8KV TRANSFORMER CKT 1	75	100	0.55161	109.8324	'BASE CASE'
13G	03ALL	'FROM->TO'	'SMOKYHL6 230.00 - SUMMIT 230KV CKT 1'	319	319	0.18519	112.0538	'LAWTON EASTSIDE - OKLAUNION 345KV CKT 1'
13G	03ALL	'FROM->TO'	'SMOKYHL6 230.00 - SUMMIT 230KV CKT 1'	319	319	0.08997	112.0538	'LAWTON EASTSIDE - OKLAUNION 345KV CKT 1'
13G	03ALL	'FROM->TO'	'SMOKYHL6 230.00 - SUMMIT 230KV CKT 1'	319	319	0.10498	112.0538	'LAWTON EASTSIDE - OKLAUNION 345KV CKT 1'
13G	03ALL	'FROM->TO'	'SMOKYHL6 230.00 - SUMMIT 230KV CKT 1'	319	319	0.12433	112.0538	'LAWTON EASTSIDE - OKLAUNION 345KV CKT 1'
13G	03ALL	'FROM->TO'	'SMOKYHL6 230.00 - SUMMIT 230KV CKT 1'	319	319	0.12433	112.0538	'LAWTON EASTSIDE - OKLAUNION 345KV CKT 1'
13G	03ALL	'FROM->TO'	'SMOKYHL6 230.00 - SUMMIT 230KV CKT 1'	319	319	0.0783	112.0538	'LAWTON EASTSIDE - OKLAUNION 345KV CKT 1'
13G	03ALL	'FROM->TO'	'SMOKYHL6 230.00 - SUMMIT 230KV CKT 1'	319	319	0.10421	112.0538	'LAWTON EASTSIDE - OKLAUNION 345KV CKT 1'
13G	03ALL	'FROM->TO'	'SMOKYHL6 230.00 - SUMMIT 230KV CKT 1'	319	319	0.11909	112.0538	'LAWTON EASTSIDE - OKLAUNION 345KV CKT 1'
13G	03ALL	'FROM->TO'	'SMOKYHL6 230.00 - SUMMIT 230KV CKT 1'	319	319	0.11909	112.0538	'LAWTON EASTSIDE - OKLAUNION 345KV CKT 1'
13G	03ALL	'FROM->TO'	'SMOKYHL6 230.00 - SUMMIT 230KV CKT 1'	319	319	0.62374	112.0538	'LAWTON EASTSIDE - OKLAUNION 345KV CKT 1'
13G	03ALL	'FROM->TO'	'SMOKYHL6 230.00 - SUMMIT 230KV CKT 1'	319	319	0.10406	112.0538	'LAWTON EASTSIDE - OKLAUNION 345KV CKT 1'
13G	03ALL	'FROM->TO'	'SMOKYHL6 230.00 - SUMMIT 230KV CKT 1'	319	319	0.12989	112.0538	'LAWTON EASTSIDE - OKLAUNION 345KV CKT 1'
13G	03ALL	'FROM->TO'	'SMOKYHL6 230.00 - SUMMIT 230KV CKT 1'	319	319	0.10818	112.0538	'LAWTON EASTSIDE - OKLAUNION 345KV CKT 1'
13G	03ALL	'TO->FROM'	'CLEARWATER - MILAN TAP 138KV CKT 1'	110	110	0.03548	129.8589	'LAWTON EASTSIDE - OKLAUNION 345KV CKT 1'
13G	03ALL	'TO->FROM'	'CLEARWATER - MILAN TAP 138KV CKT 1'	110	110	0.06225	129.8589	'LAWTON EASTSIDE - OKLAUNION 345KV CKT 1'
13G	03ALL	'TO->FROM'	'CLEARWATER - MILAN TAP 138KV CKT 1'	110	110	0.10917	129.8589	'LAWTON EASTSIDE - OKLAUNION 345KV CKT 1'
13G	03ALL	'TO->FROM'	'CLEARWATER - MILAN TAP 138KV CKT 1'	110	110	0.04923	129.8589	'LAWTON EASTSIDE - OKLAUNION 345KV CKT 1'
13G	03ALL	'TO->FROM'	'CLEARWATER - MILAN TAP 138KV CKT 1'	110	110	0.04923	129.8589	'LAWTON EASTSIDE - OKLAUNION 345KV CKT 1'
13G	03ALL	'TO->FROM'	'CLEARWATER - MILAN TAP 138KV CKT 1'	110	110	0.2105	129.8589	'LAWTON EASTSIDE - OKLAUNION 345KV CKT 1'
13G	03ALL	'TO->FROM'	'CLEARWATER - MILAN TAP 138KV CKT 1'	110	110	0.03916	129.8589	'LAWTON EASTSIDE - OKLAUNION 345KV CKT 1'
13G	03ALL	'TO->FROM'	'CLEARWATER - MILAN TAP 138KV CKT 1'	110	110	0.04091	129.8589	'LAWTON EASTSIDE - OKLAUNION 345KV CKT 1'
13G	03ALL	'TO->FROM'	'CLEARWATER - MILAN TAP 138KV CKT 1'	110	110	0.04091	129.8589	'LAWTON EASTSIDE - OKLAUNION 345KV CKT 1'
13G	03ALL	'TO->FROM'	'CLEARWATER - MILAN TAP 138KV CKT 1'	110	110	0.52609	129.8589	'LAWTON EASTSIDE - OKLAUNION 345KV CKT 1'
13G	03ALL	'TO->FROM'	'CLEARWATER - MILAN TAP 138KV CKT 1'	110	110	0.03853	129.8589	'LAWTON EASTSIDE - OKLAUNION 345KV CKT 1'
13G	03ALL	'TO->FROM'	'CLEARWATER - MILAN TAP 138KV CKT 1'	110	110	0.04359	129.8589	'LAWTON EASTSIDE - OKLAUNION 345KV CKT 1'
13G	03ALL	'TO->FROM'	'CLEARWATER - MILAN TAP 138KV CKT 1'	110	110	0.03818	129.8589	'LAWTON EASTSIDE - OKLAUNION 345KV CKT 1'
13G	03ALL	'FROM->TO'	'GREENSBURG - SUN CITY 115KV CKT 1'	120.7	129.5	0.17808	105.832	'LAWTON EASTSIDE - OKLAUNION 345KV CKT 1'
13G	03ALL	'FROM->TO'	'GREENSBURG - SUN CITY 115KV CKT 1'	120.7	129.5	0.04539	105.832	'LAWTON EASTSIDE - OKLAUNION 345KV CKT 1'
13G	03ALL	'FROM->TO'	'GREENSBURG - SUN CITY 115KV CKT 1'	120.7	129.5	0.04539	105.832	'LAWTON EASTSIDE - OKLAUNION 345KV CKT 1'
13G	03ALL	'FROM->TO'	'GREENSBURG - SUN CITY 115KV CKT 1'	120.7	129.5	0.39912	105.832	'LAWTON EASTSIDE - OKLAUNION 345KV CKT 1'
13G	03ALL	'FROM->TO'	'GREENSBURG - SUN CITY 115KV CKT 1'	120.7	129.5	0.03129	105.832	'LAWTON EASTSIDE - OKLAUNION 345KV CKT 1'
13G	03ALL	'FROM->TO'	'GREENSBURG - SUN CITY 115KV CKT 1'	120.7	129.5	0.0354	105.832	'LAWTON EASTSIDE - OKLAUNION 345KV CKT 1'
13G	03ALL	'FROM->TO'	'GREENSBURG - SUN CITY 115KV CKT 1'	120.7	129.5	0.0354	105.832	'LAWTON EASTSIDE - OKLAUNION 345KV CKT 1'
13G	03ALL	'FROM->TO'	'GREENSBURG - SUN CITY 115KV CKT 1'	120.7	129.5	0.0313	105.832	'LAWTON EASTSIDE - OKLAUNION 345KV CKT 1'
13G	03ALL	'FROM->TO'	'GREENSBURG - SUN CITY 115KV CKT 1'	120.7	129.5	0.03771	105.832	'LAWTON EASTSIDE - OKLAUNION 345KV CKT 1'
13G	03ALL	'FROM->TO'	'GREENSBURG - SUN CITY 115KV CKT 1'	120.7	129.5	0.03306	105.832	'LAWTON EASTSIDE - OKLAUNION 345KV CKT 1'
13G	03ALL	'TO->FROM'	'GREENSBURG - SSTARTP3 115.00 115KV CKT 1	120.7	129.5	0.17808	113.7097	'LAWTON EASTSIDE - OKLAUNION 345KV CKT 1'
13G	03ALL	'TO->FROM'	'GREENSBURG - SSTARTP3 115.00 115KV CKT 1	120.7	129.5	0.04539	113.7097	'LAWTON EASTSIDE - OKLAUNION 345KV CKT 1'
13G	03ALL	'TO->FROM'	'GREENSBURG - SSTARTP3 115.00 115KV CKT 1	120.7	129.5	0.04539	113.7097	'LAWTON EASTSIDE - OKLAUNION 345KV CKT 1'
13G	03ALL	'TO->FROM'	'GREENSBURG - SSTARTP3 115.00 115KV CKT 1	120.7	129.5	0.39912	113.7097	'LAWTON EASTSIDE - OKLAUNION 345KV CKT 1'
13G	03ALL	'TO->FROM'	'GREENSBURG - SSTARTP3 115.00 115KV CKT 1	120.7	129.5	0.03129	113.7097	'LAWTON EASTSIDE - OKLAUNION 345KV CKT 1'
13G	03ALL	'TO->FROM'	'GREENSBURG - SSTARTP3 115.00 115KV CKT 1	120.7	129.5	0.0354	113.7097	'LAWTON EASTSIDE - OKLAUNION 345KV CKT 1'
13G	03ALL	'TO->FROM'	'GREENSBURG - SSTARTP3 115.00 115KV CKT 1	120.7	129.5	0.0354	113.7097	'LAWTON EASTSIDE - OKLAUNION 345KV CKT 1'
13G	03ALL	'TO->FROM'	'GREENSBURG - SSTARTP3 115.00 115KV CKT 1	120.7	129.5	0.0313	113.7097	'LAWTON EASTSIDE - OKLAUNION 345KV CKT 1'
13G	03ALL	'TO->FROM'	'GREENSBURG - SSTARTP3 115.00 115KV CKT 1	120.7	129.5	0.03771	113.7097	'LAWTON EASTSIDE - OKLAUNION 345KV CKT 1'
13G	03ALL	'TO->FROM'	'GREENSBURG - SSTARTP3 115.00 115KV CKT 1	120.7	129.5	0.03306	113.7097	'LAWTON EASTSIDE - OKLAUNION 345KV CKT 1'
13G	03ALL	'FROM->TO'	'HARPER - MILAN TAP 138KV CKT 1'	95.6	95.6	0.03548	156.659	'LAWTON EASTSIDE - OKLAUNION 345KV CKT 1'
13G	03ALL	'FROM->TO'	'HARPER - MILAN TAP 138KV CKT 1'	95.6	95.6	0.06225	156.659	'LAWTON EASTSIDE - OKLAUNION 345KV CKT 1'
13G	03ALL	'FROM->TO'	'HARPER - MILAN TAP 138KV CKT 1'	95.6	95.6	0.10917	156.659	'LAWTON EASTSIDE - OKLAUNION 345KV CKT 1'
13G	03ALL	'FROM->TO'	'HARPER - MILAN TAP 138KV CKT 1'	95.6	95.6	0.04923	156.659	'LAWTON EASTSIDE - OKLAUNION 345KV CKT 1'
13G	03ALL	'FROM->TO'	'HARPER - MILAN TAP 138KV CKT 1'	95.6	95.6	0.04923	156.659	'LAWTON EASTSIDE - OKLAUNION 345KV CKT 1'
13G	03ALL	'FROM->TO'	'HARPER - MILAN TAP 138KV CKT 1'	95.6	95.6	0.2105	156.659	'LAWTON EASTSIDE - OKLAUNION 345KV CKT 1'
13G	03ALL	'FROM->TO'	'HARPER - MILAN TAP 138KV CKT 1'	95.6	95.6	0.03916	156.659	'LAWTON EASTSIDE - OKLAUNION 345KV CKT 1'
13G	03ALL	'FROM->TO'	'HARPER - MILAN TAP 138KV CKT 1'	95.6	95.6	0.04091	156.659	'LAWTON EASTSIDE - OKLAUNION 345KV CKT 1'
13G	03ALL	'FROM->TO'	'HARPER - MILAN TAP 138KV CKT 1'	95.6	95.6	0.04091	156.659	'LAWTON EASTSIDE - OKLAUNION 345KV CKT 1'
13G	03ALL	'FROM->TO'	'HARPER - MILAN TAP 138KV CKT 1'	95.6	95.6	0.52609	156.659	'LAWTON EASTSIDE - OKLAUNION 345KV CKT 1'

SEASON	GROUP	DIRECTION	MONITORED ELEMENT	RATE A (MVA)	RATE B (MVA)	TDF	TC%LOADING (%MVA)	CONTINGENCY NAME
13G	03ALL	'FROM->TO'	'HARPER - MILAN TAP 138KV CKT 1'	95.6	95.6	0.03853	156.659	'LAWTON EASTSIDE - OKLAUNION 345KV CKT 1'
13G	03ALL	'FROM->TO'	'HARPER - MILAN TAP 138KV CKT 1'	95.6	95.6	0.04359	156.659	'LAWTON EASTSIDE - OKLAUNION 345KV CKT 1'
13G	03ALL	'FROM->TO'	'HARPER - MILAN TAP 138KV CKT 1'	95.6	95.6	0.03818	156.659	'LAWTON EASTSIDE - OKLAUNION 345KV CKT 1'
13G	03ALL	'TO->FROM'	'MEDICINE LODGE - SUN CITY 115KV CKT 1'	120.7	129.5	0.17808	103.2435	'LAWTON EASTSIDE - OKLAUNION 345KV CKT 1'
13G	03ALL	'TO->FROM'	'MEDICINE LODGE - SUN CITY 115KV CKT 1'	120.7	129.5	0.04539	103.2435	'LAWTON EASTSIDE - OKLAUNION 345KV CKT 1'
13G	03ALL	'TO->FROM'	'MEDICINE LODGE - SUN CITY 115KV CKT 1'	120.7	129.5	0.04539	103.2435	'LAWTON EASTSIDE - OKLAUNION 345KV CKT 1'
13G	03ALL	'TO->FROM'	'MEDICINE LODGE - SUN CITY 115KV CKT 1'	120.7	129.5	0.39912	103.2435	'LAWTON EASTSIDE - OKLAUNION 345KV CKT 1'
13G	03ALL	'TO->FROM'	'MEDICINE LODGE - SUN CITY 115KV CKT 1'	120.7	129.5	0.03129	103.2435	'LAWTON EASTSIDE - OKLAUNION 345KV CKT 1'
13G	03ALL	'TO->FROM'	'MEDICINE LODGE - SUN CITY 115KV CKT 1'	120.7	129.5	0.0354	103.2435	'LAWTON EASTSIDE - OKLAUNION 345KV CKT 1'
13G	03ALL	'TO->FROM'	'MEDICINE LODGE - SUN CITY 115KV CKT 1'	120.7	129.5	0.0354	103.2435	'LAWTON EASTSIDE - OKLAUNION 345KV CKT 1'
13G	03ALL	'TO->FROM'	'MEDICINE LODGE - SUN CITY 115KV CKT 1'	120.7	129.5	0.0313	103.2435	'LAWTON EASTSIDE - OKLAUNION 345KV CKT 1'
13G	03ALL	'TO->FROM'	'MEDICINE LODGE - SUN CITY 115KV CKT 1'	120.7	129.5	0.03771	103.2435	'LAWTON EASTSIDE - OKLAUNION 345KV CKT 1'
13G	03ALL	'TO->FROM'	'MEDICINE LODGE - SUN CITY 115KV CKT 1'	120.7	129.5	0.03306	103.2435	'LAWTON EASTSIDE - OKLAUNION 345KV CKT 1'
13G	03ALL	'TO->FROM'	'BARBER 3 115.00 - MEDICINE LODGE 115KV CKT 1'	79.7	79.7	0.1165	103.2576	'LAWTON EASTSIDE - OKLAUNION 345KV CKT 1'
13G	03ALL	'TO->FROM'	'BARBER 3 115.00 - MEDICINE LODGE 115KV CKT 1'	79.7	79.7	0.03541	103.2576	'LAWTON EASTSIDE - OKLAUNION 345KV CKT 1'
13G	03ALL	'TO->FROM'	'BARBER 3 115.00 - MEDICINE LODGE 115KV CKT 1'	79.7	79.7	0.03541	103.2576	'LAWTON EASTSIDE - OKLAUNION 345KV CKT 1'
13G	03ALL	'TO->FROM'	'BARBER 3 115.00 - MEDICINE LODGE 115KV CKT 1'	79.7	79.7	0.25197	103.2576	'LAWTON EASTSIDE - OKLAUNION 345KV CKT 1'
13G	03ALL	'TO->FROM'	'BARBER 3 115.00 - MEDICINE LODGE 115KV CKT 1'	79.7	79.7	0.03014	103.2576	'LAWTON EASTSIDE - OKLAUNION 345KV CKT 1'
13G	03ALL	'FROM->TO'	'SMOKYHL6 230.00 - SUMMIT 230KV CKT 1'	319	319	0.18636	108.4877	'ELK CITY 230KV - SWEETWATER 230KV CKT 1
13G	03ALL	'FROM->TO'	'SMOKYHL6 230.00 - SUMMIT 230KV CKT 1'	319	319	0.09089	108.4877	'ELK CITY 230KV - SWEETWATER 230KV CKT 1
13G	03ALL	'FROM->TO'	'SMOKYHL6 230.00 - SUMMIT 230KV CKT 1'	319	319	0.10512	108.4877	'ELK CITY 230KV - SWEETWATER 230KV CKT 1
13G	03ALL	'FROM->TO'	'SMOKYHL6 230.00 - SUMMIT 230KV CKT 1'	319	319	0.12429	108.4877	'ELK CITY 230KV - SWEETWATER 230KV CKT 1
13G	03ALL	'FROM->TO'	'SMOKYHL6 230.00 - SUMMIT 230KV CKT 1'	319	319	0.12429	108.4877	'ELK CITY 230KV - SWEETWATER 230KV CKT 1
13G	03ALL	'FROM->TO'	'SMOKYHL6 230.00 - SUMMIT 230KV CKT 1'	319	319	0.07917	108.4877	'ELK CITY 230KV - SWEETWATER 230KV CKT 1
13G	03ALL	'FROM->TO'	'SMOKYHL6 230.00 - SUMMIT 230KV CKT 1'	319	319	0.10305	108.4877	'ELK CITY 230KV - SWEETWATER 230KV CKT 1
13G	03ALL	'FROM->TO'	'SMOKYHL6 230.00 - SUMMIT 230KV CKT 1'	319	319	0.11808	108.4877	'ELK CITY 230KV - SWEETWATER 230KV CKT 1
13G	03ALL	'FROM->TO'	'SMOKYHL6 230.00 - SUMMIT 230KV CKT 1'	319	319	0.11808	108.4877	'ELK CITY 230KV - SWEETWATER 230KV CKT 1
13G	03ALL	'FROM->TO'	'SMOKYHL6 230.00 - SUMMIT 230KV CKT 1'	319	319	0.62608	108.4877	'ELK CITY 230KV - SWEETWATER 230KV CKT 1
13G	03ALL	'FROM->TO'	'SMOKYHL6 230.00 - SUMMIT 230KV CKT 1'	319	319	0.10297	108.4877	'ELK CITY 230KV - SWEETWATER 230KV CKT 1
13G	03ALL	'FROM->TO'	'SMOKYHL6 230.00 - SUMMIT 230KV CKT 1'	319	319	0.12965	108.4877	'ELK CITY 230KV - SWEETWATER 230KV CKT 1
13G	03ALL	'FROM->TO'	'SMOKYHL6 230.00 - SUMMIT 230KV CKT 1'	319	319	0.10637	108.4877	'ELK CITY 230KV - SWEETWATER 230KV CKT 1
13G	03ALL	'TO->FROM'	'CLEARWATER - MILAN TAP 138KV CKT 1'	110	110	0.03592	126.256	'ELK CITY 230KV - SWEETWATER 230KV CKT 1
13G	03ALL	'TO->FROM'	'CLEARWATER - MILAN TAP 138KV CKT 1'	110	110	0.06259	126.256	'ELK CITY 230KV - SWEETWATER 230KV CKT 1
13G	03ALL	'TO->FROM'	'CLEARWATER - MILAN TAP 138KV CKT 1'	110	110	0.10922	126.256	'ELK CITY 230KV - SWEETWATER 230KV CKT 1
13G	03ALL	'TO->FROM'	'CLEARWATER - MILAN TAP 138KV CKT 1'	110	110	0.04922	126.256	'ELK CITY 230KV - SWEETWATER 230KV CKT 1
13G	03ALL	'TO->FROM'	'CLEARWATER - MILAN TAP 138KV CKT 1'	110	110	0.04922	126.256	'ELK CITY 230KV - SWEETWATER 230KV CKT 1
13G	03ALL	'TO->FROM'	'CLEARWATER - MILAN TAP 138KV CKT 1'	110	110	0.21083	126.256	'ELK CITY 230KV - SWEETWATER 230KV CKT 1
13G	03ALL	'TO->FROM'	'CLEARWATER - MILAN TAP 138KV CKT 1'	110	110	0.03873	126.256	'ELK CITY 230KV - SWEETWATER 230KV CKT 1
13G	03ALL	'TO->FROM'	'CLEARWATER - MILAN TAP 138KV CKT 1'	110	110	0.04053	126.256	'ELK CITY 230KV - SWEETWATER 230KV CKT 1
13G	03ALL	'TO->FROM'	'CLEARWATER - MILAN TAP 138KV CKT 1'	110	110	0.04053	126.256	'ELK CITY 230KV - SWEETWATER 230KV CKT 1
13G	03ALL	'TO->FROM'	'CLEARWATER - MILAN TAP 138KV CKT 1'	110	110	0.52705	126.256	'ELK CITY 230KV - SWEETWATER 230KV CKT 1
13G	03ALL	'TO->FROM'	'CLEARWATER - MILAN TAP 138KV CKT 1'	110	110	0.03813	126.256	'ELK CITY 230KV - SWEETWATER 230KV CKT 1
13G	03ALL	'TO->FROM'	'CLEARWATER - MILAN TAP 138KV CKT 1'	110	110	0.04351	126.256	'ELK CITY 230KV - SWEETWATER 230KV CKT 1
13G	03ALL	'TO->FROM'	'CLEARWATER - MILAN TAP 138KV CKT 1'	110	110	0.03751	126.256	'ELK CITY 230KV - SWEETWATER 230KV CKT 1
13G	03ALL	'FROM->TO'	'GREENSBURG - SUN CITY 115KV CKT 1'	120.7	129.5	0.17813	102.3377	'ELK CITY 230KV - SWEETWATER 230KV CKT 1
13G	03ALL	'FROM->TO'	'GREENSBURG - SUN CITY 115KV CKT 1'	120.7	129.5	0.04538	102.3377	'ELK CITY 230KV - SWEETWATER 230KV CKT 1
13G	03ALL	'FROM->TO'	'GREENSBURG - SUN CITY 115KV CKT 1'	120.7	129.5	0.04538	102.3377	'ELK CITY 230KV - SWEETWATER 230KV CKT 1
13G	03ALL	'FROM->TO'	'GREENSBURG - SUN CITY 115KV CKT 1'	120.7	129.5	0.3994	102.3377	'ELK CITY 230KV - SWEETWATER 230KV CKT 1
13G	03ALL	'FROM->TO'	'GREENSBURG - SUN CITY 115KV CKT 1'	120.7	129.5	0.03091	102.3377	'ELK CITY 230KV - SWEETWATER 230KV CKT 1
13G	03ALL	'FROM->TO'	'GREENSBURG - SUN CITY 115KV CKT 1'	120.7	129.5	0.03508	102.3377	'ELK CITY 230KV - SWEETWATER 230KV CKT 1
13G	03ALL	'FROM->TO'	'GREENSBURG - SUN CITY 115KV CKT 1'	120.7	129.5	0.03508	102.3377	'ELK CITY 230KV - SWEETWATER 230KV CKT 1
13G	03ALL	'FROM->TO'	'GREENSBURG - SUN CITY 115KV CKT 1'	120.7	129.5	0.03095	102.3377	'ELK CITY 230KV - SWEETWATER 230KV CKT 1
13G	03ALL	'FROM->TO'	'GREENSBURG - SUN CITY 115KV CKT 1'	120.7	129.5	0.03763	102.3377	'ELK CITY 230KV - SWEETWATER 230KV CKT 1
13G	03ALL	'FROM->TO'	'GREENSBURG - SUN CITY 115KV CKT 1'	120.7	129.5	0.03247	102.3377	'ELK CITY 230KV - SWEETWATER 230KV CKT 1
13G	03ALL	'TO->FROM'	'GREENSBURG - SSTARTP3 115.00 115KV CKT 1	120.7	129.5	0.17813	110.1995	'ELK CITY 230KV - SWEETWATER 230KV CKT 1
13G	03ALL	'TO->FROM'	'GREENSBURG - SSTARTP3 115.00 115KV CKT 1	120.7	129.5	0.04538	110.1995	'ELK CITY 230KV - SWEETWATER 230KV CKT 1
13G	03ALL	'TO->FROM'	'GREENSBURG - SSTARTP3 115.00 115KV CKT 1	120.7	129.5	0.04538	110.1995	'ELK CITY 230KV - SWEETWATER 230KV CKT 1
13G	03ALL	'TO->FROM'	'GREENSBURG - SSTARTP3 115.00 115KV CKT 1	120.7	129.5	0.3994	110.1995	'ELK CITY 230KV - SWEETWATER 230KV CKT 1
13G	03ALL	'TO->FROM'	'GREENSBURG - SSTARTP3 115.00 115KV CKT 1	120.7	129.5	0.03091	110.1995	'ELK CITY 230KV - SWEETWATER 230KV CKT 1
13G	03ALL	'TO->FROM'	'GREENSBURG - SSTARTP3 115.00 115KV CKT 1	120.7	129.5	0.03508	110.1995	'ELK CITY 230KV - SWEETWATER 230KV CKT 1
13G	03ALL	'TO->FROM'	'GREENSBURG - SSTARTP3 115.00 115KV CKT 1	120.7	129.5	0.03508	110.1995	'ELK CITY 230KV - SWEETWATER 230KV CKT 1
13G	03ALL	'TO->FROM'	'GREENSBURG - SSTARTP3 115.00 115KV CKT 1	120.7	129.5	0.03095	110.1995	'ELK CITY 230KV - SWEETWATER 230KV CKT 1
13G	03ALL	'TO->FROM'	'GREENSBURG - SSTARTP3 115.00 115KV CKT 1	120.7	129.5	0.03763	110.1995	'ELK CITY 230KV - SWEETWATER 230KV CKT 1
13G	03ALL	'TO->FROM'	'GREENSBURG - SSTARTP3 115.00 115KV CKT 1	120.7	129.5	0.03247	110.1995	'ELK CITY 230KV - SWEETWATER 230KV CKT 1

SEASON	GROUP	DIRECTION	MONITORED ELEMENT	RATE A (MVA)	RATE B (MVA)	TDF	TC%LOADING (%MVA)	CONTINGENCY NAME
13G	03ALL	'FROM->TO'	'HARPER - MILAN TAP 138KV CKT 1'	95.6	95.6	0.03592	152.5651	'ELK CITY 230KV - SWEETWATER 230KV CKT 1
13G	03ALL	'FROM->TO'	'HARPER - MILAN TAP 138KV CKT 1'	95.6	95.6	0.06259	152.5651	'ELK CITY 230KV - SWEETWATER 230KV CKT 1
13G	03ALL	'FROM->TO'	'HARPER - MILAN TAP 138KV CKT 1'	95.6	95.6	0.10922	152.5651	'ELK CITY 230KV - SWEETWATER 230KV CKT 1
13G	03ALL	'FROM->TO'	'HARPER - MILAN TAP 138KV CKT 1'	95.6	95.6	0.04922	152.5651	'ELK CITY 230KV - SWEETWATER 230KV CKT 1
13G	03ALL	'FROM->TO'	'HARPER - MILAN TAP 138KV CKT 1'	95.6	95.6	0.04922	152.5651	'ELK CITY 230KV - SWEETWATER 230KV CKT 1
13G	03ALL	'FROM->TO'	'HARPER - MILAN TAP 138KV CKT 1'	95.6	95.6	0.21083	152.5651	'ELK CITY 230KV - SWEETWATER 230KV CKT 1
13G	03ALL	'FROM->TO'	'HARPER - MILAN TAP 138KV CKT 1'	95.6	95.6	0.03873	152.5651	'ELK CITY 230KV - SWEETWATER 230KV CKT 1
13G	03ALL	'FROM->TO'	'HARPER - MILAN TAP 138KV CKT 1'	95.6	95.6	0.04053	152.5651	'ELK CITY 230KV - SWEETWATER 230KV CKT 1
13G	03ALL	'FROM->TO'	'HARPER - MILAN TAP 138KV CKT 1'	95.6	95.6	0.04053	152.5651	'ELK CITY 230KV - SWEETWATER 230KV CKT 1
13G	03ALL	'FROM->TO'	'HARPER - MILAN TAP 138KV CKT 1'	95.6	95.6	0.52705	152.5651	'ELK CITY 230KV - SWEETWATER 230KV CKT 1
13G	03ALL	'FROM->TO'	'HARPER - MILAN TAP 138KV CKT 1'	95.6	95.6	0.03813	152.5651	'ELK CITY 230KV - SWEETWATER 230KV CKT 1
13G	03ALL	'FROM->TO'	'HARPER - MILAN TAP 138KV CKT 1'	95.6	95.6	0.04351	152.5651	'ELK CITY 230KV - SWEETWATER 230KV CKT 1
13G	03ALL	'FROM->TO'	'HARPER - MILAN TAP 138KV CKT 1'	95.6	95.6	0.03751	152.5651	'ELK CITY 230KV - SWEETWATER 230KV CKT 1
13G	03ALL	'FROM->TO'	'SMOKYHL6 230.00 - SUMMIT 230KV CKT 1'	319	319	0.18636	105.2293	'STATELINE INTERCHANGE - SWEETWATER 230KV CKT &1
13G	03ALL	'FROM->TO'	'SMOKYHL6 230.00 - SUMMIT 230KV CKT 1'	319	319	0.09089	105.2293	'STATELINE INTERCHANGE - SWEETWATER 230KV CKT &1
13G	03ALL	'FROM->TO'	'SMOKYHL6 230.00 - SUMMIT 230KV CKT 1'	319	319	0.10512	105.2293	'STATELINE INTERCHANGE - SWEETWATER 230KV CKT &1
13G	03ALL	'FROM->TO'	'SMOKYHL6 230.00 - SUMMIT 230KV CKT 1'	319	319	0.12429	105.2293	'STATELINE INTERCHANGE - SWEETWATER 230KV CKT &1
13G	03ALL	'FROM->TO'	'SMOKYHL6 230.00 - SUMMIT 230KV CKT 1'	319	319	0.12429	105.2293	'STATELINE INTERCHANGE - SWEETWATER 230KV CKT &1
13G	03ALL	'FROM->TO'	'SMOKYHL6 230.00 - SUMMIT 230KV CKT 1'	319	319	0.07917	105.2293	'STATELINE INTERCHANGE - SWEETWATER 230KV CKT &1
13G	03ALL	'FROM->TO'	'SMOKYHL6 230.00 - SUMMIT 230KV CKT 1'	319	319	0.10305	105.2293	'STATELINE INTERCHANGE - SWEETWATER 230KV CKT &1
13G	03ALL	'FROM->TO'	'SMOKYHL6 230.00 - SUMMIT 230KV CKT 1'	319	319	0.11808	105.2293	'STATELINE INTERCHANGE - SWEETWATER 230KV CKT &1
13G	03ALL	'FROM->TO'	'SMOKYHL6 230.00 - SUMMIT 230KV CKT 1'	319	319	0.11808	105.2293	'STATELINE INTERCHANGE - SWEETWATER 230KV CKT &1
13G	03ALL	'FROM->TO'	'SMOKYHL6 230.00 - SUMMIT 230KV CKT 1'	319	319	0.62608	105.2293	'STATELINE INTERCHANGE - SWEETWATER 230KV CKT &1
13G	03ALL	'FROM->TO'	'SMOKYHL6 230.00 - SUMMIT 230KV CKT 1'	319	319	0.10297	105.2293	'STATELINE INTERCHANGE - SWEETWATER 230KV CKT &1
13G	03ALL	'FROM->TO'	'SMOKYHL6 230.00 - SUMMIT 230KV CKT 1'	319	319	0.12965	105.2293	'STATELINE INTERCHANGE - SWEETWATER 230KV CKT &1
13G	03ALL	'FROM->TO'	'SMOKYHL6 230.00 - SUMMIT 230KV CKT 1'	319	319	0.10637	105.2293	'STATELINE INTERCHANGE - SWEETWATER 230KV CKT &1
13G	03ALL	'TO->FROM'	'CLEARWATER - MILAN TAP 138KV CKT 1'	110	110	0.03592	122.895	'STATELINE INTERCHANGE - SWEETWATER 230KV CKT &1
13G	03ALL	'TO->FROM'	'CLEARWATER - MILAN TAP 138KV CKT 1'	110	110	0.06259	122.895	'STATELINE INTERCHANGE - SWEETWATER 230KV CKT &1
13G	03ALL	'TO->FROM'	'CLEARWATER - MILAN TAP 138KV CKT 1'	110	110	0.10922	122.895	'STATELINE INTERCHANGE - SWEETWATER 230KV CKT &1
13G	03ALL	'TO->FROM'	'CLEARWATER - MILAN TAP 138KV CKT 1'	110	110	0.04922	122.895	'STATELINE INTERCHANGE - SWEETWATER 230KV CKT &1
13G	03ALL	'TO->FROM'	'CLEARWATER - MILAN TAP 138KV CKT 1'	110	110	0.04922	122.895	'STATELINE INTERCHANGE - SWEETWATER 230KV CKT &1
13G	03ALL	'TO->FROM'	'CLEARWATER - MILAN TAP 138KV CKT 1'	110	110	0.21083	122.895	'STATELINE INTERCHANGE - SWEETWATER 230KV CKT &1
13G	03ALL	'TO->FROM'	'CLEARWATER - MILAN TAP 138KV CKT 1'	110	110	0.03873	122.895	'STATELINE INTERCHANGE - SWEETWATER 230KV CKT &1
13G	03ALL	'TO->FROM'	'CLEARWATER - MILAN TAP 138KV CKT 1'	110	110	0.04053	122.895	'STATELINE INTERCHANGE - SWEETWATER 230KV CKT &1
13G	03ALL	'TO->FROM'	'CLEARWATER - MILAN TAP 138KV CKT 1'	110	110	0.04053	122.895	'STATELINE INTERCHANGE - SWEETWATER 230KV CKT &1
13G	03ALL	'TO->FROM'	'CLEARWATER - MILAN TAP 138KV CKT 1'	110	110	0.52705	122.895	'STATELINE INTERCHANGE - SWEETWATER 230KV CKT &1
13G	03ALL	'TO->FROM'	'CLEARWATER - MILAN TAP 138KV CKT 1'	110	110	0.03813	122.895	'STATELINE INTERCHANGE - SWEETWATER 230KV CKT &1
13G	03ALL	'TO->FROM'	'CLEARWATER - MILAN TAP 138KV CKT 1'	110	110	0.04351	122.895	'STATELINE INTERCHANGE - SWEETWATER 230KV CKT &1
13G	03ALL	'TO->FROM'	'CLEARWATER - MILAN TAP 138KV CKT 1'	110	110	0.03751	122.895	'STATELINE INTERCHANGE - SWEETWATER 230KV CKT &1
13G	03ALL	'FROM->TO'	'GREENSBURG - SUN CITY 115KV CKT 1'	120.7	129.5	0.17813	102.2	'STATELINE INTERCHANGE - SWEETWATER 230KV CKT &1
13G	03ALL	'FROM->TO'	'GREENSBURG - SUN CITY 115KV CKT 1'	120.7	129.5	0.04538	102.2	'STATELINE INTERCHANGE - SWEETWATER 230KV CKT &1
13G	03ALL	'FROM->TO'	'GREENSBURG - SUN CITY 115KV CKT 1'	120.7	129.5	0.04538	102.2	'STATELINE INTERCHANGE - SWEETWATER 230KV CKT &1
13G	03ALL	'FROM->TO'	'GREENSBURG - SUN CITY 115KV CKT 1'	120.7	129.5	0.3994	102.2	'STATELINE INTERCHANGE - SWEETWATER 230KV CKT &1
13G	03ALL	'FROM->TO'	'GREENSBURG - SUN CITY 115KV CKT 1'	120.7	129.5	0.03091	102.2	'STATELINE INTERCHANGE - SWEETWATER 230KV CKT &1
13G	03ALL	'FROM->TO'	'GREENSBURG - SUN CITY 115KV CKT 1'	120.7	129.5	0.03508	102.2	'STATELINE INTERCHANGE - SWEETWATER 230KV CKT &1
13G	03ALL	'FROM->TO'	'GREENSBURG - SUN CITY 115KV CKT 1'	120.7	129.5	0.03508	102.2	'STATELINE INTERCHANGE - SWEETWATER 230KV CKT &1
13G	03ALL	'FROM->TO'	'GREENSBURG - SUN CITY 115KV CKT 1'	120.7	129.5	0.03095	102.2	'STATELINE INTERCHANGE - SWEETWATER 230KV CKT &1
13G	03ALL	'FROM->TO'	'GREENSBURG - SUN CITY 115KV CKT 1'	120.7	129.5	0.03763	102.2	'STATELINE INTERCHANGE - SWEETWATER 230KV CKT &1
13G	03ALL	'FROM->TO'	'GREENSBURG - SUN CITY 115KV CKT 1'	120.7	129.5	0.03247	102.2	'STATELINE INTERCHANGE - SWEETWATER 230KV CKT &1
13G	03ALL	'TO->FROM'	'GREENSBURG - SSTARTP3 115.00 115KV CKT 1	120.7	129.5	0.17813	107.0008	'STATELINE INTERCHANGE - SWEETWATER 230KV CKT &1
13G	03ALL	'TO->FROM'	'GREENSBURG - SSTARTP3 115.00 115KV CKT 1	120.7	129.5	0.04538	107.0008	'STATELINE INTERCHANGE - SWEETWATER 230KV CKT &1
13G	03ALL	'TO->FROM'	'GREENSBURG - SSTARTP3 115.00 115KV CKT 1	120.7	129.5	0.04538	107.0008	'STATELINE INTERCHANGE - SWEETWATER 230KV CKT &1
13G	03ALL	'TO->FROM'	'GREENSBURG - SSTARTP3 115.00 115KV CKT 1	120.7	129.5	0.3994	107.0008	'STATELINE INTERCHANGE - SWEETWATER 230KV CKT &1
13G	03ALL	'TO->FROM'	'GREENSBURG - SSTARTP3 115.00 115KV CKT 1	120.7	129.5	0.03091	107.0008	'STATELINE INTERCHANGE - SWEETWATER 230KV CKT &1
13G	03ALL	'TO->FROM'	'GREENSBURG - SSTARTP3 115.00 115KV CKT 1	120.7	129.5	0.03508	107.0008	'STATELINE INTERCHANGE - SWEETWATER 230KV CKT &1
13G	03ALL	'TO->FROM'	'GREENSBURG - SSTARTP3 115.00 115KV CKT 1	120.7	129.5	0.03508	107.0008	'STATELINE INTERCHANGE - SWEETWATER 230KV CKT &1
13G	03ALL	'TO->FROM'	'GREENSBURG - SSTARTP3 115.00 115KV CKT 1	120.7	129.5	0.03095	107.0008	'STATELINE INTERCHANGE - SWEETWATER 230KV CKT &1
13G	03ALL	'TO->FROM'	'GREENSBURG - SSTARTP3 115.00 115KV CKT 1	120.7	129.5	0.03763	107.0008	'STATELINE INTERCHANGE - SWEETWATER 230KV CKT &1
13G	03ALL	'TO->FROM'	'GREENSBURG - SSTARTP3 115.00 115KV CKT 1	120.7	129.5	0.03247	107.0008	'STATELINE INTERCHANGE - SWEETWATER 230KV CKT &1
13G	03ALL	'FROM->TO'	'SMOKYHL6 230.00 - SUMMIT 230KV CKT 1'	319	319	0.18475	103.3004	'CIMARRON - WOODRING 345KV CKT 1'
13G	03ALL	'FROM->TO'	'SMOKYHL6 230.00 - SUMMIT 230KV CKT 1'	319	319	0.08904	103.3004	'CIMARRON - WOODRING 345KV CKT 1'
13G	03ALL	'FROM->TO'	'SMOKYHL6 230.00 - SUMMIT 230KV CKT 1'	319	319	0.10262	103.3004	'CIMARRON - WOODRING 345KV CKT 1'
13G	03ALL	'FROM->TO'	'SMOKYHL6 230.00 - SUMMIT 230KV CKT 1'	319	319	0.12166	103.3004	'CIMARRON - WOODRING 345KV CKT 1'
13G	03ALL	'FROM->TO'	'SMOKYHL6 230.00 - SUMMIT 230KV CKT 1'	319	319	0.12166	103.3004	'CIMARRON - WOODRING 345KV CKT 1'

SEASON	GROUP	DIRECTION	MONITORED ELEMENT	RATE A (MVA)	RATE B (MVA)	TDF	TC%LOADING (%MVA)	CONTINGENCY NAME
13G	03ALL	'FROM->TO'	'SMOKYHL6 230.00 - SUMMIT 230KV CKT 1'	319	319	0.07725	103.3004	'CIMARRON - WOODRING 345KV CKT 1'
13G	03ALL	'FROM->TO'	'SMOKYHL6 230.00 - SUMMIT 230KV CKT 1'	319	319	0.09949	103.3004	'CIMARRON - WOODRING 345KV CKT 1'
13G	03ALL	'FROM->TO'	'SMOKYHL6 230.00 - SUMMIT 230KV CKT 1'	319	319	0.11463	103.3004	'CIMARRON - WOODRING 345KV CKT 1'
13G	03ALL	'FROM->TO'	'SMOKYHL6 230.00 - SUMMIT 230KV CKT 1'	319	319	0.11463	103.3004	'CIMARRON - WOODRING 345KV CKT 1'
13G	03ALL	'FROM->TO'	'SMOKYHL6 230.00 - SUMMIT 230KV CKT 1'	319	319	0.62539	103.3004	'CIMARRON - WOODRING 345KV CKT 1'
13G	03ALL	'FROM->TO'	'SMOKYHL6 230.00 - SUMMIT 230KV CKT 1'	319	319	0.09948	103.3004	'CIMARRON - WOODRING 345KV CKT 1'
13G	03ALL	'FROM->TO'	'SMOKYHL6 230.00 - SUMMIT 230KV CKT 1'	319	319	0.12685	103.3004	'CIMARRON - WOODRING 345KV CKT 1'
13G	03ALL	'FROM->TO'	'SMOKYHL6 230.00 - SUMMIT 230KV CKT 1'	319	319	0.10226	103.3004	'CIMARRON - WOODRING 345KV CKT 1'
13G	03ALL	'FROM->TO'	'SMOKYHL6 230.00 - SUMMIT 230KV CKT 1'	319	319	0.18293	101.4162	'HUNTERS7 345.00 - WOODRING 345KV CKT 1
13G	03ALL	'FROM->TO'	'SMOKYHL6 230.00 - SUMMIT 230KV CKT 1'	319	319	0.08714	101.4162	'HUNTERS7 345.00 - WOODRING 345KV CKT 1
13G	03ALL	'FROM->TO'	'SMOKYHL6 230.00 - SUMMIT 230KV CKT 1'	319	319	0.10094	101.4162	'HUNTERS7 345.00 - WOODRING 345KV CKT 1
13G	03ALL	'FROM->TO'	'SMOKYHL6 230.00 - SUMMIT 230KV CKT 1'	319	319	0.12006	101.4162	'HUNTERS7 345.00 - WOODRING 345KV CKT 1
13G	03ALL	'FROM->TO'	'SMOKYHL6 230.00 - SUMMIT 230KV CKT 1'	319	319	0.12006	101.4162	'HUNTERS7 345.00 - WOODRING 345KV CKT 1
13G	03ALL	'FROM->TO'	'SMOKYHL6 230.00 - SUMMIT 230KV CKT 1'	319	319	0.07536	101.4162	'HUNTERS7 345.00 - WOODRING 345KV CKT 1
13G	03ALL	'FROM->TO'	'SMOKYHL6 230.00 - SUMMIT 230KV CKT 1'	319	319	0.09815	101.4162	'HUNTERS7 345.00 - WOODRING 345KV CKT 1
13G	03ALL	'FROM->TO'	'SMOKYHL6 230.00 - SUMMIT 230KV CKT 1'	319	319	0.11323	101.4162	'HUNTERS7 345.00 - WOODRING 345KV CKT 1
13G	03ALL	'FROM->TO'	'SMOKYHL6 230.00 - SUMMIT 230KV CKT 1'	319	319	0.11323	101.4162	'HUNTERS7 345.00 - WOODRING 345KV CKT 1
13G	03ALL	'FROM->TO'	'SMOKYHL6 230.00 - SUMMIT 230KV CKT 1'	319	319	0.62311	101.4162	'HUNTERS7 345.00 - WOODRING 345KV CKT 1
13G	03ALL	'FROM->TO'	'SMOKYHL6 230.00 - SUMMIT 230KV CKT 1'	319	319	0.09815	101.4162	'HUNTERS7 345.00 - WOODRING 345KV CKT 1
13G	03ALL	'FROM->TO'	'SMOKYHL6 230.00 - SUMMIT 230KV CKT 1'	319	319	0.12532	101.4162	'HUNTERS7 345.00 - WOODRING 345KV CKT 1
13G	03ALL	'FROM->TO'	'SMOKYHL6 230.00 - SUMMIT 230KV CKT 1'	319	319	0.10099	101.4162	'HUNTERS7 345.00 - WOODRING 345KV CKT 1
13G	03ALL	'TO->FROM'	'GREENSBURG - SSTARTP3 115.00 115KV CKT 1	120.7	129.5	0.17695	104.2357	'HUNTERS7 345.00 - WOODRING 345KV CKT 1
13G	03ALL	'TO->FROM'	'GREENSBURG - SSTARTP3 115.00 115KV CKT 1	120.7	129.5	0.04418	104.2357	'HUNTERS7 345.00 - WOODRING 345KV CKT 1
13G	03ALL	'TO->FROM'	'GREENSBURG - SSTARTP3 115.00 115KV CKT 1	120.7	129.5	0.04418	104.2357	'HUNTERS7 345.00 - WOODRING 345KV CKT 1
13G	03ALL	'TO->FROM'	'GREENSBURG - SSTARTP3 115.00 115KV CKT 1	120.7	129.5	0.39838	104.2357	'HUNTERS7 345.00 - WOODRING 345KV CKT 1
13G	03ALL	'TO->FROM'	'GREENSBURG - SSTARTP3 115.00 115KV CKT 1	120.7	129.5	0.03365	104.2357	'HUNTERS7 345.00 - WOODRING 345KV CKT 1
13G	03ALL	'TO->FROM'	'GREENSBURG - SSTARTP3 115.00 115KV CKT 1	120.7	129.5	0.03365	104.2357	'HUNTERS7 345.00 - WOODRING 345KV CKT 1
13G	03ALL	'TO->FROM'	'GREENSBURG - SSTARTP3 115.00 115KV CKT 1	120.7	129.5	0.03639	104.2357	'HUNTERS7 345.00 - WOODRING 345KV CKT 1
13G	03ALL	'TO->FROM'	'GREENSBURG - SSTARTP3 115.00 115KV CKT 1	120.7	129.5	0.03086	104.2357	'HUNTERS7 345.00 - WOODRING 345KV CKT 1
13G	03ALL	'FROM->TO'	'SMOKYHL6 230.00 - SUMMIT 230KV CKT 1'	319	319	0.18518	103.8491	'SOONER - SPRING CREEK 345KV CKT 1'
13G	03ALL	'FROM->TO'	'SMOKYHL6 230.00 - SUMMIT 230KV CKT 1'	319	319	0.08948	103.8491	'SOONER - SPRING CREEK 345KV CKT 1'
13G	03ALL	'FROM->TO'	'SMOKYHL6 230.00 - SUMMIT 230KV CKT 1'	319	319	0.103	103.8491	'SOONER - SPRING CREEK 345KV CKT 1'
13G	03ALL	'FROM->TO'	'SMOKYHL6 230.00 - SUMMIT 230KV CKT 1'	319	319	0.12202	103.8491	'SOONER - SPRING CREEK 345KV CKT 1'
13G	03ALL	'FROM->TO'	'SMOKYHL6 230.00 - SUMMIT 230KV CKT 1'	319	319	0.12202	103.8491	'SOONER - SPRING CREEK 345KV CKT 1'
13G	03ALL	'FROM->TO'	'SMOKYHL6 230.00 - SUMMIT 230KV CKT 1'	319	319	0.0777	103.8491	'SOONER - SPRING CREEK 345KV CKT 1'
13G	03ALL	'FROM->TO'	'SMOKYHL6 230.00 - SUMMIT 230KV CKT 1'	319	319	0.09976	103.8491	'SOONER - SPRING CREEK 345KV CKT 1'
13G	03ALL	'FROM->TO'	'SMOKYHL6 230.00 - SUMMIT 230KV CKT 1'	319	319	0.11492	103.8491	'SOONER - SPRING CREEK 345KV CKT 1'
13G	03ALL	'FROM->TO'	'SMOKYHL6 230.00 - SUMMIT 230KV CKT 1'	319	319	0.11492	103.8491	'SOONER - SPRING CREEK 345KV CKT 1'
13G	03ALL	'FROM->TO'	'SMOKYHL6 230.00 - SUMMIT 230KV CKT 1'	319	319	0.62595	103.8491	'SOONER - SPRING CREEK 345KV CKT 1'
13G	03ALL	'FROM->TO'	'SMOKYHL6 230.00 - SUMMIT 230KV CKT 1'	319	319	0.09975	103.8491	'SOONER - SPRING CREEK 345KV CKT 1'
13G	03ALL	'FROM->TO'	'SMOKYHL6 230.00 - SUMMIT 230KV CKT 1'	319	319	0.12719	103.8491	'SOONER - SPRING CREEK 345KV CKT 1'
13G	03ALL	'FROM->TO'	'SMOKYHL6 230.00 - SUMMIT 230KV CKT 1'	319	319	0.10249	103.8491	'SOONER - SPRING CREEK 345KV CKT 1'
13G	03ALL	'FROM->TO'	'SMOKYHL6 230.00 - SUMMIT 230KV CKT 1'	319	319	0.18411	104.1826	'ROSE HILL - SOONER 345KV CKT 1'
13G	03ALL	'FROM->TO'	'SMOKYHL6 230.00 - SUMMIT 230KV CKT 1'	319	319	0.08837	104.1826	'ROSE HILL - SOONER 345KV CKT 1'
13G	03ALL	'FROM->TO'	'SMOKYHL6 230.00 - SUMMIT 230KV CKT 1'	319	319	0.10195	104.1826	'ROSE HILL - SOONER 345KV CKT 1'
13G	03ALL	'FROM->TO'	'SMOKYHL6 230.00 - SUMMIT 230KV CKT 1'	319	319	0.12104	104.1826	'ROSE HILL - SOONER 345KV CKT 1'
13G	03ALL	'FROM->TO'	'SMOKYHL6 230.00 - SUMMIT 230KV CKT 1'	319	319	0.12104	104.1826	'ROSE HILL - SOONER 345KV CKT 1'
13G	03ALL	'FROM->TO'	'SMOKYHL6 230.00 - SUMMIT 230KV CKT 1'	319	319	0.07648	104.1826	'ROSE HILL - SOONER 345KV CKT 1'
13G	03ALL	'FROM->TO'	'SMOKYHL6 230.00 - SUMMIT 230KV CKT 1'	319	319	0.09891	104.1826	'ROSE HILL - SOONER 345KV CKT 1'
13G	03ALL	'FROM->TO'	'SMOKYHL6 230.00 - SUMMIT 230KV CKT 1'	319	319	0.11405	104.1826	'ROSE HILL - SOONER 345KV CKT 1'
13G	03ALL	'FROM->TO'	'SMOKYHL6 230.00 - SUMMIT 230KV CKT 1'	319	319	0.11405	104.1826	'ROSE HILL - SOONER 345KV CKT 1'
13G	03ALL	'FROM->TO'	'SMOKYHL6 230.00 - SUMMIT 230KV CKT 1'	319	319	0.6247	104.1826	'ROSE HILL - SOONER 345KV CKT 1'
13G	03ALL	'FROM->TO'	'SMOKYHL6 230.00 - SUMMIT 230KV CKT 1'	319	319	0.09891	104.1826	'ROSE HILL - SOONER 345KV CKT 1'
13G	03ALL	'FROM->TO'	'SMOKYHL6 230.00 - SUMMIT 230KV CKT 1'	319	319	0.12625	104.1826	'ROSE HILL - SOONER 345KV CKT 1'
13G	03ALL	'FROM->TO'	'SMOKYHL6 230.00 - SUMMIT 230KV CKT 1'	319	319	0.10169	104.1826	'ROSE HILL - SOONER 345KV CKT 1'
13G	03ALL	'FROM->TO'	'SMOKYHL6 230.00 - SUMMIT 230KV CKT 1'	319	319	0.18518	103.8489	'NORTHWEST - SPRING CREEK 345KV CKT 1'
13G	03ALL	'FROM->TO'	'SMOKYHL6 230.00 - SUMMIT 230KV CKT 1'	319	319	0.08948	103.8489	'NORTHWEST - SPRING CREEK 345KV CKT 1'
13G	03ALL	'FROM->TO'	'SMOKYHL6 230.00 - SUMMIT 230KV CKT 1'	319	319	0.103	103.8489	'NORTHWEST - SPRING CREEK 345KV CKT 1'
13G	03ALL	'FROM->TO'	'SMOKYHL6 230.00 - SUMMIT 230KV CKT 1'	319	319	0.12202	103.8489	'NORTHWEST - SPRING CREEK 345KV CKT 1'
13G	03ALL	'FROM->TO'	'SMOKYHL6 230.00 - SUMMIT 230KV CKT 1'	319	319	0.12202	103.8489	'NORTHWEST - SPRING CREEK 345KV CKT 1'
13G	03ALL	'FROM->TO'	'SMOKYHL6 230.00 - SUMMIT 230KV CKT 1'	319	319	0.0777	103.8489	'NORTHWEST - SPRING CREEK 345KV CKT 1'
13G	03ALL	'FROM->TO'	'SMOKYHL6 230.00 - SUMMIT 230KV CKT 1'	319	319	0.09976	103.8489	'NORTHWEST - SPRING CREEK 345KV CKT 1'
13G	03ALL	'FROM->TO'	'SMOKYHL6 230.00 - SUMMIT 230KV CKT 1'	319	319	0.11492	103.8489	'NORTHWEST - SPRING CREEK 345KV CKT 1'
13G	03ALL	'FROM->TO'	'SMOKYHL6 230.00 - SUMMIT 230KV CKT 1'	319	319	0.11492	103.8489	'NORTHWEST - SPRING CREEK 345KV CKT 1'

SEASON	GROUP	DIRECTION	MONITORED ELEMENT	RATE A (MVA)	RATE B (MVA)	TDF	TC%LOADING (%MVA)	CONTINGENCY NAME
13G	03ALL	'FROM->TO'	'SMOKYHL6 230.00 - SUMMIT 230KV CKT 1'	319	319	0.62595	103.8489	'NORTHWEST - SPRING CREEK 345KV CKT 1'
13G	03ALL	'FROM->TO'	'SMOKYHL6 230.00 - SUMMIT 230KV CKT 1'	319	319	0.09975	103.8489	'NORTHWEST - SPRING CREEK 345KV CKT 1'
13G	03ALL	'FROM->TO'	'SMOKYHL6 230.00 - SUMMIT 230KV CKT 1'	319	319	0.12719	103.8489	'NORTHWEST - SPRING CREEK 345KV CKT 1'
13G	03ALL	'FROM->TO'	'SMOKYHL6 230.00 - SUMMIT 230KV CKT 1'	319	319	0.10249	103.8489	'NORTHWEST - SPRING CREEK 345KV CKT 1'
13G	03ALL	'FROM->TO'	'SMOKYHL6 230.00 - SUMMIT 230KV CKT 1'	319	319	0.18293	101.431	'HUNTERS7 345.00 - VIOLA 7 345.00 345KV CKT 1
13G	03ALL	'FROM->TO'	'SMOKYHL6 230.00 - SUMMIT 230KV CKT 1'	319	319	0.08714	101.431	'HUNTERS7 345.00 - VIOLA 7 345.00 345KV CKT 1
13G	03ALL	'FROM->TO'	'SMOKYHL6 230.00 - SUMMIT 230KV CKT 1'	319	319	0.10094	101.431	'HUNTERS7 345.00 - VIOLA 7 345.00 345KV CKT 1
13G	03ALL	'FROM->TO'	'SMOKYHL6 230.00 - SUMMIT 230KV CKT 1'	319	319	0.12006	101.431	'HUNTERS7 345.00 - VIOLA 7 345.00 345KV CKT 1
13G	03ALL	'FROM->TO'	'SMOKYHL6 230.00 - SUMMIT 230KV CKT 1'	319	319	0.12006	101.431	'HUNTERS7 345.00 - VIOLA 7 345.00 345KV CKT 1
13G	03ALL	'FROM->TO'	'SMOKYHL6 230.00 - SUMMIT 230KV CKT 1'	319	319	0.07536	101.431	'HUNTERS7 345.00 - VIOLA 7 345.00 345KV CKT 1
13G	03ALL	'FROM->TO'	'SMOKYHL6 230.00 - SUMMIT 230KV CKT 1'	319	319	0.09815	101.431	'HUNTERS7 345.00 - VIOLA 7 345.00 345KV CKT 1
13G	03ALL	'FROM->TO'	'SMOKYHL6 230.00 - SUMMIT 230KV CKT 1'	319	319	0.11323	101.431	'HUNTERS7 345.00 - VIOLA 7 345.00 345KV CKT 1
13G	03ALL	'FROM->TO'	'SMOKYHL6 230.00 - SUMMIT 230KV CKT 1'	319	319	0.11323	101.431	'HUNTERS7 345.00 - VIOLA 7 345.00 345KV CKT 1
13G	03ALL	'FROM->TO'	'SMOKYHL6 230.00 - SUMMIT 230KV CKT 1'	319	319	0.62311	101.431	'HUNTERS7 345.00 - VIOLA 7 345.00 345KV CKT 1
13G	03ALL	'FROM->TO'	'SMOKYHL6 230.00 - SUMMIT 230KV CKT 1'	319	319	0.09815	101.431	'HUNTERS7 345.00 - VIOLA 7 345.00 345KV CKT 1
13G	03ALL	'FROM->TO'	'SMOKYHL6 230.00 - SUMMIT 230KV CKT 1'	319	319	0.12532	101.431	'HUNTERS7 345.00 - VIOLA 7 345.00 345KV CKT 1
13G	03ALL	'FROM->TO'	'SMOKYHL6 230.00 - SUMMIT 230KV CKT 1'	319	319	0.10099	101.431	'HUNTERS7 345.00 - VIOLA 7 345.00 345KV CKT 1
13G	03ALL	'TO->FROM'	'GREENSBURG - SSTARTP3 115.00 115KV CKT 1	120.7	129.5	0.17695	104.2548	'HUNTERS7 345.00 - VIOLA 7 345.00 345KV CKT 1
13G	03ALL	'TO->FROM'	'GREENSBURG - SSTARTP3 115.00 115KV CKT 1	120.7	129.5	0.04418	104.2548	'HUNTERS7 345.00 - VIOLA 7 345.00 345KV CKT 1
13G	03ALL	'TO->FROM'	'GREENSBURG - SSTARTP3 115.00 115KV CKT 1	120.7	129.5	0.04418	104.2548	'HUNTERS7 345.00 - VIOLA 7 345.00 345KV CKT 1
13G	03ALL	'TO->FROM'	'GREENSBURG - SSTARTP3 115.00 115KV CKT 1	120.7	129.5	0.39838	104.2548	'HUNTERS7 345.00 - VIOLA 7 345.00 345KV CKT 1
13G	03ALL	'TO->FROM'	'GREENSBURG - SSTARTP3 115.00 115KV CKT 1	120.7	129.5	0.03365	104.2548	'HUNTERS7 345.00 - VIOLA 7 345.00 345KV CKT 1
13G	03ALL	'TO->FROM'	'GREENSBURG - SSTARTP3 115.00 115KV CKT 1	120.7	129.5	0.03365	104.2548	'HUNTERS7 345.00 - VIOLA 7 345.00 345KV CKT 1
13G	03ALL	'TO->FROM'	'GREENSBURG - SSTARTP3 115.00 115KV CKT 1	120.7	129.5	0.03639	104.2548	'HUNTERS7 345.00 - VIOLA 7 345.00 345KV CKT 1
13G	03ALL	'TO->FROM'	'GREENSBURG - SSTARTP3 115.00 115KV CKT 1	120.7	129.5	0.03086	104.2548	'HUNTERS7 345.00 - VIOLA 7 345.00 345KV CKT 1
13G	03ALL	'FROM->TO'	'SMOKYHL6 230.00 - SUMMIT 230KV CKT 1'	319	319	0.19016	109.9446	'Hitchland Interchange - POTTER COUNTY INTERCHANGE 345KV CKT 1
13G	03ALL	'FROM->TO'	'SMOKYHL6 230.00 - SUMMIT 230KV CKT 1'	319	319	0.0947	109.9446	'Hitchland Interchange - POTTER COUNTY INTERCHANGE 345KV CKT 1
13G	03ALL	'FROM->TO'	'SMOKYHL6 230.00 - SUMMIT 230KV CKT 1'	319	319	0.10896	109.9446	'Hitchland Interchange - POTTER COUNTY INTERCHANGE 345KV CKT 1
13G	03ALL	'FROM->TO'	'SMOKYHL6 230.00 - SUMMIT 230KV CKT 1'	319	319	0.12813	109.9446	'Hitchland Interchange - POTTER COUNTY INTERCHANGE 345KV CKT 1
13G	03ALL	'FROM->TO'	'SMOKYHL6 230.00 - SUMMIT 230KV CKT 1'	319	319	0.12813	109.9446	'Hitchland Interchange - POTTER COUNTY INTERCHANGE 345KV CKT 1
13G	03ALL	'FROM->TO'	'SMOKYHL6 230.00 - SUMMIT 230KV CKT 1'	319	319	0.08298	109.9446	'Hitchland Interchange - POTTER COUNTY INTERCHANGE 345KV CKT 1
13G	03ALL	'FROM->TO'	'SMOKYHL6 230.00 - SUMMIT 230KV CKT 1'	319	319	0.10693	109.9446	'Hitchland Interchange - POTTER COUNTY INTERCHANGE 345KV CKT 1
13G	03ALL	'FROM->TO'	'SMOKYHL6 230.00 - SUMMIT 230KV CKT 1'	319	319	0.12195	109.9446	'Hitchland Interchange - POTTER COUNTY INTERCHANGE 345KV CKT 1
13G	03ALL	'FROM->TO'	'SMOKYHL6 230.00 - SUMMIT 230KV CKT 1'	319	319	0.12195	109.9446	'Hitchland Interchange - POTTER COUNTY INTERCHANGE 345KV CKT 1
13G	03ALL	'FROM->TO'	'SMOKYHL6 230.00 - SUMMIT 230KV CKT 1'	319	319	0.62984	109.9446	'Hitchland Interchange - POTTER COUNTY INTERCHANGE 345KV CKT 1
13G	03ALL	'FROM->TO'	'SMOKYHL6 230.00 - SUMMIT 230KV CKT 1'	319	319	0.10685	109.9446	'Hitchland Interchange - POTTER COUNTY INTERCHANGE 345KV CKT 1
13G	03ALL	'FROM->TO'	'SMOKYHL6 230.00 - SUMMIT 230KV CKT 1'	319	319	0.1335	109.9446	'Hitchland Interchange - POTTER COUNTY INTERCHANGE 345KV CKT 1
13G	03ALL	'FROM->TO'	'SMOKYHL6 230.00 - SUMMIT 230KV CKT 1'	319	319	0.11027	109.9446	'Hitchland Interchange - POTTER COUNTY INTERCHANGE 345KV CKT 1
13G	03ALL	'TO->FROM'	'CLEARWATER - MILAN TAP 138KV CKT 1'	110	110	0.03736	127.3814	'Hitchland Interchange - POTTER COUNTY INTERCHANGE 345KV CKT 1
13G	03ALL	'TO->FROM'	'CLEARWATER - MILAN TAP 138KV CKT 1'	110	110	0.06404	127.3814	'Hitchland Interchange - POTTER COUNTY INTERCHANGE 345KV CKT 1
13G	03ALL	'TO->FROM'	'CLEARWATER - MILAN TAP 138KV CKT 1'	110	110	0.11067	127.3814	'Hitchland Interchange - POTTER COUNTY INTERCHANGE 345KV CKT 1
13G	03ALL	'TO->FROM'	'CLEARWATER - MILAN TAP 138KV CKT 1'	110	110	0.05067	127.3814	'Hitchland Interchange - POTTER COUNTY INTERCHANGE 345KV CKT 1
13G	03ALL	'TO->FROM'	'CLEARWATER - MILAN TAP 138KV CKT 1'	110	110	0.05067	127.3814	'Hitchland Interchange - POTTER COUNTY INTERCHANGE 345KV CKT 1
13G	03ALL	'TO->FROM'	'CLEARWATER - MILAN TAP 138KV CKT 1'	110	110	0.21228	127.3814	'Hitchland Interchange - POTTER COUNTY INTERCHANGE 345KV CKT 1
13G	03ALL	'TO->FROM'	'CLEARWATER - MILAN TAP 138KV CKT 1'	110	110	0.04019	127.3814	'Hitchland Interchange - POTTER COUNTY INTERCHANGE 345KV CKT 1
13G	03ALL	'TO->FROM'	'CLEARWATER - MILAN TAP 138KV CKT 1'	110	110	0.042	127.3814	'Hitchland Interchange - POTTER COUNTY INTERCHANGE 345KV CKT 1
13G	03ALL	'TO->FROM'	'CLEARWATER - MILAN TAP 138KV CKT 1'	110	110	0.042	127.3814	'Hitchland Interchange - POTTER COUNTY INTERCHANGE 345KV CKT 1
13G	03ALL	'TO->FROM'	'CLEARWATER - MILAN TAP 138KV CKT 1'	110	110	0.52848	127.3814	'Hitchland Interchange - POTTER COUNTY INTERCHANGE 345KV CKT 1
13G	03ALL	'TO->FROM'	'CLEARWATER - MILAN TAP 138KV CKT 1'	110	110	0.03959	127.3814	'Hitchland Interchange - POTTER COUNTY INTERCHANGE 345KV CKT 1
13G	03ALL	'TO->FROM'	'CLEARWATER - MILAN TAP 138KV CKT 1'	110	110	0.04496	127.3814	'Hitchland Interchange - POTTER COUNTY INTERCHANGE 345KV CKT 1
13G	03ALL	'TO->FROM'	'CLEARWATER - MILAN TAP 138KV CKT 1'	110	110	0.03898	127.3814	'Hitchland Interchange - POTTER COUNTY INTERCHANGE 345KV CKT 1
13G	03ALL	'FROM->TO'	'GREENSBURG - SUN CITY 115KV CKT 1'	120.7	129.5	0.17937	103.1851	'Hitchland Interchange - POTTER COUNTY INTERCHANGE 345KV CKT 1
13G	03ALL	'FROM->TO'	'GREENSBURG - SUN CITY 115KV CKT 1'	120.7	129.5	0.04662	103.1851	'Hitchland Interchange - POTTER COUNTY INTERCHANGE 345KV CKT 1
13G	03ALL	'FROM->TO'	'GREENSBURG - SUN CITY 115KV CKT 1'	120.7	129.5	0.04662	103.1851	'Hitchland Interchange - POTTER COUNTY INTERCHANGE 345KV CKT 1
13G	03ALL	'FROM->TO'	'GREENSBURG - SUN CITY 115KV CKT 1'	120.7	129.5	0.40064	103.1851	'Hitchland Interchange - POTTER COUNTY INTERCHANGE 345KV CKT 1
13G	03ALL	'FROM->TO'	'GREENSBURG - SUN CITY 115KV CKT 1'	120.7	129.5	0.03217	103.1851	'Hitchland Interchange - POTTER COUNTY INTERCHANGE 345KV CKT 1
13G	03ALL	'FROM->TO'	'GREENSBURG - SUN CITY 115KV CKT 1'	120.7	129.5	0.03633	103.1851	'Hitchland Interchange - POTTER COUNTY INTERCHANGE 345KV CKT 1
13G	03ALL	'FROM->TO'	'GREENSBURG - SUN CITY 115KV CKT 1'	120.7	129.5	0.03633	103.1851	'Hitchland Interchange - POTTER COUNTY INTERCHANGE 345KV CKT 1
13G	03ALL	'FROM->TO'	'GREENSBURG - SUN CITY 115KV CKT 1'	120.7	129.5	0.03221	103.1851	'Hitchland Interchange - POTTER COUNTY INTERCHANGE 345KV CKT 1
13G	03ALL	'FROM->TO'	'GREENSBURG - SUN CITY 115KV CKT 1'	120.7	129.5	0.03888	103.1851	'Hitchland Interchange - POTTER COUNTY INTERCHANGE 345KV CKT 1
13G	03ALL	'FROM->TO'	'GREENSBURG - SUN CITY 115KV CKT 1'	120.7	129.5	0.03373	103.1851	'Hitchland Interchange - POTTER COUNTY INTERCHANGE 345KV CKT 1
13G	03ALL	'TO->FROM'	'GREENSBURG - SSTARTP3 115.00 115KV CKT 1	120.7	129.5	0.17937	111.039	'Hitchland Interchange - POTTER COUNTY INTERCHANGE 345KV CKT 1
13G	03ALL	'TO->FROM'	'GREENSBURG - SSTARTP3 115.00 115KV CKT 1	120.7	129.5	0.04662	111.039	'Hitchland Interchange - POTTER COUNTY INTERCHANGE 345KV CKT 1
13G	03ALL	'TO->FROM'	'GREENSBURG - SSTARTP3 115.00 115KV CKT 1	120.7	129.5	0.04662	111.039	'Hitchland Interchange - POTTER COUNTY INTERCHANGE 345KV CKT 1

SEASON	GROUP	DIRECTION	MONITORED ELEMENT	RATE A (MVA)	RATE B (MVA)	TDF	TC%LOADING (%MVA)	CONTINGENCY NAME
13G	03ALL	'TO->FROM'	'GREENSBURG - SSTARTP3 115.00 115KV CKT 1	120.7	129.5	0.40064	111.039	'Hitchland Interchange - POTTER COUNTY INTERCHANGE 345KV CKT 1
13G	03ALL	'TO->FROM'	'GREENSBURG - SSTARTP3 115.00 115KV CKT 1	120.7	129.5	0.03217	111.039	'Hitchland Interchange - POTTER COUNTY INTERCHANGE 345KV CKT 1
13G	03ALL	'TO->FROM'	'GREENSBURG - SSTARTP3 115.00 115KV CKT 1	120.7	129.5	0.03633	111.039	'Hitchland Interchange - POTTER COUNTY INTERCHANGE 345KV CKT 1
13G	03ALL	'TO->FROM'	'GREENSBURG - SSTARTP3 115.00 115KV CKT 1	120.7	129.5	0.03633	111.039	'Hitchland Interchange - POTTER COUNTY INTERCHANGE 345KV CKT 1
13G	03ALL	'TO->FROM'	'GREENSBURG - SSTARTP3 115.00 115KV CKT 1	120.7	129.5	0.03221	111.039	'Hitchland Interchange - POTTER COUNTY INTERCHANGE 345KV CKT 1
13G	03ALL	'TO->FROM'	'GREENSBURG - SSTARTP3 115.00 115KV CKT 1	120.7	129.5	0.03888	111.039	'Hitchland Interchange - POTTER COUNTY INTERCHANGE 345KV CKT 1
13G	03ALL	'TO->FROM'	'GREENSBURG - SSTARTP3 115.00 115KV CKT 1	120.7	129.5	0.03373	111.039	'Hitchland Interchange - POTTER COUNTY INTERCHANGE 345KV CKT 1
13G	03ALL	'FROM->TO'	'HARPER - MILAN TAP 138KV CKT 1'	95.6	95.6	0.03736	153.8581	'Hitchland Interchange - POTTER COUNTY INTERCHANGE 345KV CKT 1
13G	03ALL	'FROM->TO'	'HARPER - MILAN TAP 138KV CKT 1'	95.6	95.6	0.06404	153.8581	'Hitchland Interchange - POTTER COUNTY INTERCHANGE 345KV CKT 1
13G	03ALL	'FROM->TO'	'HARPER - MILAN TAP 138KV CKT 1'	95.6	95.6	0.11067	153.8581	'Hitchland Interchange - POTTER COUNTY INTERCHANGE 345KV CKT 1
13G	03ALL	'FROM->TO'	'HARPER - MILAN TAP 138KV CKT 1'	95.6	95.6	0.05067	153.8581	'Hitchland Interchange - POTTER COUNTY INTERCHANGE 345KV CKT 1
13G	03ALL	'FROM->TO'	'HARPER - MILAN TAP 138KV CKT 1'	95.6	95.6	0.05067	153.8581	'Hitchland Interchange - POTTER COUNTY INTERCHANGE 345KV CKT 1
13G	03ALL	'FROM->TO'	'HARPER - MILAN TAP 138KV CKT 1'	95.6	95.6	0.21228	153.8581	'Hitchland Interchange - POTTER COUNTY INTERCHANGE 345KV CKT 1
13G	03ALL	'FROM->TO'	'HARPER - MILAN TAP 138KV CKT 1'	95.6	95.6	0.04019	153.8581	'Hitchland Interchange - POTTER COUNTY INTERCHANGE 345KV CKT 1
13G	03ALL	'FROM->TO'	'HARPER - MILAN TAP 138KV CKT 1'	95.6	95.6	0.042	153.8581	'Hitchland Interchange - POTTER COUNTY INTERCHANGE 345KV CKT 1
13G	03ALL	'FROM->TO'	'HARPER - MILAN TAP 138KV CKT 1'	95.6	95.6	0.042	153.8581	'Hitchland Interchange - POTTER COUNTY INTERCHANGE 345KV CKT 1
13G	03ALL	'FROM->TO'	'HARPER - MILAN TAP 138KV CKT 1'	95.6	95.6	0.52848	153.8581	'Hitchland Interchange - POTTER COUNTY INTERCHANGE 345KV CKT 1
13G	03ALL	'FROM->TO'	'HARPER - MILAN TAP 138KV CKT 1'	95.6	95.6	0.03959	153.8581	'Hitchland Interchange - POTTER COUNTY INTERCHANGE 345KV CKT 1
13G	03ALL	'FROM->TO'	'HARPER - MILAN TAP 138KV CKT 1'	95.6	95.6	0.04496	153.8581	'Hitchland Interchange - POTTER COUNTY INTERCHANGE 345KV CKT 1
13G	03ALL	'FROM->TO'	'HARPER - MILAN TAP 138KV CKT 1'	95.6	95.6	0.03898	153.8581	'Hitchland Interchange - POTTER COUNTY INTERCHANGE 345KV CKT 1
13G	03ALL	'TO->FROM'	'MEDICINE LODGE - SUN CITY 115KV CKT 1'	120.7	129.5	0.17937	100.6053	'Hitchland Interchange - POTTER COUNTY INTERCHANGE 345KV CKT 1
13G	03ALL	'TO->FROM'	'MEDICINE LODGE - SUN CITY 115KV CKT 1'	120.7	129.5	0.04662	100.6053	'Hitchland Interchange - POTTER COUNTY INTERCHANGE 345KV CKT 1
13G	03ALL	'TO->FROM'	'MEDICINE LODGE - SUN CITY 115KV CKT 1'	120.7	129.5	0.04662	100.6053	'Hitchland Interchange - POTTER COUNTY INTERCHANGE 345KV CKT 1
13G	03ALL	'TO->FROM'	'MEDICINE LODGE - SUN CITY 115KV CKT 1'	120.7	129.5	0.40064	100.6053	'Hitchland Interchange - POTTER COUNTY INTERCHANGE 345KV CKT 1
13G	03ALL	'TO->FROM'	'MEDICINE LODGE - SUN CITY 115KV CKT 1'	120.7	129.5	0.03217	100.6053	'Hitchland Interchange - POTTER COUNTY INTERCHANGE 345KV CKT 1
13G	03ALL	'TO->FROM'	'MEDICINE LODGE - SUN CITY 115KV CKT 1'	120.7	129.5	0.03633	100.6053	'Hitchland Interchange - POTTER COUNTY INTERCHANGE 345KV CKT 1
13G	03ALL	'TO->FROM'	'MEDICINE LODGE - SUN CITY 115KV CKT 1'	120.7	129.5	0.03633	100.6053	'Hitchland Interchange - POTTER COUNTY INTERCHANGE 345KV CKT 1
13G	03ALL	'TO->FROM'	'MEDICINE LODGE - SUN CITY 115KV CKT 1'	120.7	129.5	0.03221	100.6053	'Hitchland Interchange - POTTER COUNTY INTERCHANGE 345KV CKT 1
13G	03ALL	'TO->FROM'	'MEDICINE LODGE - SUN CITY 115KV CKT 1'	120.7	129.5	0.03888	100.6053	'Hitchland Interchange - POTTER COUNTY INTERCHANGE 345KV CKT 1
13G	03ALL	'TO->FROM'	'MEDICINE LODGE - SUN CITY 115KV CKT 1'	120.7	129.5	0.03373	100.6053	'Hitchland Interchange - POTTER COUNTY INTERCHANGE 345KV CKT 1
13G	03ALL	'TO->FROM'	'BARBER 3 115.00 - MEDICINE LODGE 115KV CKT 1'	79.7	79.7	0.11753	100.1378	'Hitchland Interchange - POTTER COUNTY INTERCHANGE 345KV CKT 1
13G	03ALL	'TO->FROM'	'BARBER 3 115.00 - MEDICINE LODGE 115KV CKT 1'	79.7	79.7	0.0364	100.1378	'Hitchland Interchange - POTTER COUNTY INTERCHANGE 345KV CKT 1
13G	03ALL	'TO->FROM'	'BARBER 3 115.00 - MEDICINE LODGE 115KV CKT 1'	79.7	79.7	0.0364	100.1378	'Hitchland Interchange - POTTER COUNTY INTERCHANGE 345KV CKT 1
13G	03ALL	'TO->FROM'	'BARBER 3 115.00 - MEDICINE LODGE 115KV CKT 1'	79.7	79.7	0.25319	100.1378	'Hitchland Interchange - POTTER COUNTY INTERCHANGE 345KV CKT 1
13G	03ALL	'TO->FROM'	'BARBER 3 115.00 - MEDICINE LODGE 115KV CKT 1'	79.7	79.7	0.03107	100.1378	'Hitchland Interchange - POTTER COUNTY INTERCHANGE 345KV CKT 1
13G	03ALL	'FROM->TO'	'SMOKYHL6 230.00 - SUMMIT 230KV CKT 1'	319	319	0.18636	109.6387	'GRAPEVINE INTERCHANGE - STATELINE INTERCHANGE 230KV CKT 1
13G	03ALL	'FROM->TO'	'SMOKYHL6 230.00 - SUMMIT 230KV CKT 1'	319	319	0.09089	109.6387	'GRAPEVINE INTERCHANGE - STATELINE INTERCHANGE 230KV CKT 1
13G	03ALL	'FROM->TO'	'SMOKYHL6 230.00 - SUMMIT 230KV CKT 1'	319	319	0.10512	109.6387	'GRAPEVINE INTERCHANGE - STATELINE INTERCHANGE 230KV CKT 1
13G	03ALL	'FROM->TO'	'SMOKYHL6 230.00 - SUMMIT 230KV CKT 1'	319	319	0.12429	109.6387	'GRAPEVINE INTERCHANGE - STATELINE INTERCHANGE 230KV CKT 1
13G	03ALL	'FROM->TO'	'SMOKYHL6 230.00 - SUMMIT 230KV CKT 1'	319	319	0.12429	109.6387	'GRAPEVINE INTERCHANGE - STATELINE INTERCHANGE 230KV CKT 1
13G	03ALL	'FROM->TO'	'SMOKYHL6 230.00 - SUMMIT 230KV CKT 1'	319	319	0.07917	109.6387	'GRAPEVINE INTERCHANGE - STATELINE INTERCHANGE 230KV CKT 1
13G	03ALL	'FROM->TO'	'SMOKYHL6 230.00 - SUMMIT 230KV CKT 1'	319	319	0.10305	109.6387	'GRAPEVINE INTERCHANGE - STATELINE INTERCHANGE 230KV CKT 1
13G	03ALL	'FROM->TO'	'SMOKYHL6 230.00 - SUMMIT 230KV CKT 1'	319	319	0.11808	109.6387	'GRAPEVINE INTERCHANGE - STATELINE INTERCHANGE 230KV CKT 1
13G	03ALL	'FROM->TO'	'SMOKYHL6 230.00 - SUMMIT 230KV CKT 1'	319	319	0.11808	109.6387	'GRAPEVINE INTERCHANGE - STATELINE INTERCHANGE 230KV CKT 1
13G	03ALL	'FROM->TO'	'SMOKYHL6 230.00 - SUMMIT 230KV CKT 1'	319	319	0.62608	109.6387	'GRAPEVINE INTERCHANGE - STATELINE INTERCHANGE 230KV CKT 1
13G	03ALL	'FROM->TO'	'SMOKYHL6 230.00 - SUMMIT 230KV CKT 1'	319	319	0.10297	109.6387	'GRAPEVINE INTERCHANGE - STATELINE INTERCHANGE 230KV CKT 1
13G	03ALL	'FROM->TO'	'SMOKYHL6 230.00 - SUMMIT 230KV CKT 1'	319	319	0.12965	109.6387	'GRAPEVINE INTERCHANGE - STATELINE INTERCHANGE 230KV CKT 1
13G	03ALL	'FROM->TO'	'SMOKYHL6 230.00 - SUMMIT 230KV CKT 1'	319	319	0.10637	109.6387	'GRAPEVINE INTERCHANGE - STATELINE INTERCHANGE 230KV CKT 1
13G	03ALL	'TO->FROM'	'CLEARWATER - MILAN TAP 138KV CKT 1'	110	110	0.03592	127.4196	'GRAPEVINE INTERCHANGE - STATELINE INTERCHANGE 230KV CKT 1
13G	03ALL	'TO->FROM'	'CLEARWATER - MILAN TAP 138KV CKT 1'	110	110	0.06259	127.4196	'GRAPEVINE INTERCHANGE - STATELINE INTERCHANGE 230KV CKT 1
13G	03ALL	'TO->FROM'	'CLEARWATER - MILAN TAP 138KV CKT 1'	110	110	0.10922	127.4196	'GRAPEVINE INTERCHANGE - STATELINE INTERCHANGE 230KV CKT 1
13G	03ALL	'TO->FROM'	'CLEARWATER - MILAN TAP 138KV CKT 1'	110	110	0.04922	127.4196	'GRAPEVINE INTERCHANGE - STATELINE INTERCHANGE 230KV CKT 1
13G	03ALL	'TO->FROM'	'CLEARWATER - MILAN TAP 138KV CKT 1'	110	110	0.04922	127.4196	'GRAPEVINE INTERCHANGE - STATELINE INTERCHANGE 230KV CKT 1
13G	03ALL	'TO->FROM'	'CLEARWATER - MILAN TAP 138KV CKT 1'	110	110	0.21083	127.4196	'GRAPEVINE INTERCHANGE - STATELINE INTERCHANGE 230KV CKT 1
13G	03ALL	'TO->FROM'	'CLEARWATER - MILAN TAP 138KV CKT 1'	110	110	0.03873	127.4196	'GRAPEVINE INTERCHANGE - STATELINE INTERCHANGE 230KV CKT 1
13G	03ALL	'TO->FROM'	'CLEARWATER - MILAN TAP 138KV CKT 1'	110	110	0.04053	127.4196	'GRAPEVINE INTERCHANGE - STATELINE INTERCHANGE 230KV CKT 1
13G	03ALL	'TO->FROM'	'CLEARWATER - MILAN TAP 138KV CKT 1'	110	110	0.04053	127.4196	'GRAPEVINE INTERCHANGE - STATELINE INTERCHANGE 230KV CKT 1
13G	03ALL	'TO->FROM'	'CLEARWATER - MILAN TAP 138KV CKT 1'	110	110	0.52705	127.4196	'GRAPEVINE INTERCHANGE - STATELINE INTERCHANGE 230KV CKT 1
13G	03ALL	'TO->FROM'	'CLEARWATER - MILAN TAP 138KV CKT 1'	110	110	0.03813	127.4196	'GRAPEVINE INTERCHANGE - STATELINE INTERCHANGE 230KV CKT 1
13G	03ALL	'TO->FROM'	'CLEARWATER - MILAN TAP 138KV CKT 1'	110	110	0.04351	127.4196	'GRAPEVINE INTERCHANGE - STATELINE INTERCHANGE 230KV CKT 1
13G	03ALL	'TO->FROM'	'CLEARWATER - MILAN TAP 138KV CKT 1'	110	110	0.03751	127.4196	'GRAPEVINE INTERCHANGE - STATELINE INTERCHANGE 230KV CKT 1
13G	03ALL	'FROM->TO'	'GREENSBURG - SUN CITY 115KV CKT 1'	120.7	129.5	0.17813	103.4845	'GRAPEVINE INTERCHANGE - STATELINE INTERCHANGE 230KV CKT 1
13G	03ALL	'FROM->TO'	'GREENSBURG - SUN CITY 115KV CKT 1'	120.7	129.5	0.04538	103.4845	'GRAPEVINE INTERCHANGE - STATELINE INTERCHANGE 230KV CKT 1
13G	03ALL	'FROM->TO'	'GREENSBURG - SUN CITY 115KV CKT 1'	120.7	129.5	0.04538	103.4845	'GRAPEVINE INTERCHANGE - STATELINE INTERCHANGE 230KV CKT 1

SEASON	GROUP	DIRECTION	MONITORED ELEMENT	RATE A (MVA)	RATE B (MVA)	TDF	TC%LOADING (%MVA)	CONTINGENCY NAME
13G	03ALL	'FROM->TO'	'GREENSBURG - SUN CITY 115KV CKT 1'	120.7	129.5	0.3994	103.4845	'GRAPEVINE INTERCHANGE - STATELINE INTERCHANGE 230KV CKT 1
13G	03ALL	'FROM->TO'	'GREENSBURG - SUN CITY 115KV CKT 1'	120.7	129.5	0.03091	103.4845	'GRAPEVINE INTERCHANGE - STATELINE INTERCHANGE 230KV CKT 1
13G	03ALL	'FROM->TO'	'GREENSBURG - SUN CITY 115KV CKT 1'	120.7	129.5	0.03508	103.4845	'GRAPEVINE INTERCHANGE - STATELINE INTERCHANGE 230KV CKT 1
13G	03ALL	'FROM->TO'	'GREENSBURG - SUN CITY 115KV CKT 1'	120.7	129.5	0.03508	103.4845	'GRAPEVINE INTERCHANGE - STATELINE INTERCHANGE 230KV CKT 1
13G	03ALL	'FROM->TO'	'GREENSBURG - SUN CITY 115KV CKT 1'	120.7	129.5	0.03095	103.4845	'GRAPEVINE INTERCHANGE - STATELINE INTERCHANGE 230KV CKT 1
13G	03ALL	'FROM->TO'	'GREENSBURG - SUN CITY 115KV CKT 1'	120.7	129.5	0.03763	103.4845	'GRAPEVINE INTERCHANGE - STATELINE INTERCHANGE 230KV CKT 1
13G	03ALL	'FROM->TO'	'GREENSBURG - SUN CITY 115KV CKT 1'	120.7	129.5	0.03247	103.4845	'GRAPEVINE INTERCHANGE - STATELINE INTERCHANGE 230KV CKT 1
13G	03ALL	'TO->FROM'	'GREENSBURG - SSTARTP3 115.00 115KV CKT 1	120.7	129.5	0.17813	111.3407	'GRAPEVINE INTERCHANGE - STATELINE INTERCHANGE 230KV CKT 1
13G	03ALL	'TO->FROM'	'GREENSBURG - SSTARTP3 115.00 115KV CKT 1	120.7	129.5	0.04538	111.3407	'GRAPEVINE INTERCHANGE - STATELINE INTERCHANGE 230KV CKT 1
13G	03ALL	'TO->FROM'	'GREENSBURG - SSTARTP3 115.00 115KV CKT 1	120.7	129.5	0.04538	111.3407	'GRAPEVINE INTERCHANGE - STATELINE INTERCHANGE 230KV CKT 1
13G	03ALL	'TO->FROM'	'GREENSBURG - SSTARTP3 115.00 115KV CKT 1	120.7	129.5	0.3994	111.3407	'GRAPEVINE INTERCHANGE - STATELINE INTERCHANGE 230KV CKT 1
13G	03ALL	'TO->FROM'	'GREENSBURG - SSTARTP3 115.00 115KV CKT 1	120.7	129.5	0.03091	111.3407	'GRAPEVINE INTERCHANGE - STATELINE INTERCHANGE 230KV CKT 1
13G	03ALL	'TO->FROM'	'GREENSBURG - SSTARTP3 115.00 115KV CKT 1	120.7	129.5	0.03508	111.3407	'GRAPEVINE INTERCHANGE - STATELINE INTERCHANGE 230KV CKT 1
13G	03ALL	'TO->FROM'	'GREENSBURG - SSTARTP3 115.00 115KV CKT 1	120.7	129.5	0.03508	111.3407	'GRAPEVINE INTERCHANGE - STATELINE INTERCHANGE 230KV CKT 1
13G	03ALL	'TO->FROM'	'GREENSBURG - SSTARTP3 115.00 115KV CKT 1	120.7	129.5	0.03095	111.3407	'GRAPEVINE INTERCHANGE - STATELINE INTERCHANGE 230KV CKT 1
13G	03ALL	'TO->FROM'	'GREENSBURG - SSTARTP3 115.00 115KV CKT 1	120.7	129.5	0.03763	111.3407	'GRAPEVINE INTERCHANGE - STATELINE INTERCHANGE 230KV CKT 1
13G	03ALL	'TO->FROM'	'GREENSBURG - SSTARTP3 115.00 115KV CKT 1	120.7	129.5	0.03247	111.3407	'GRAPEVINE INTERCHANGE - STATELINE INTERCHANGE 230KV CKT 1
13G	03ALL	'FROM->TO'	'HARPER - MILAN TAP 138KV CKT 1'	95.6	95.6	0.03592	153.9037	'GRAPEVINE INTERCHANGE - STATELINE INTERCHANGE 230KV CKT 1
13G	03ALL	'FROM->TO'	'HARPER - MILAN TAP 138KV CKT 1'	95.6	95.6	0.06259	153.9037	'GRAPEVINE INTERCHANGE - STATELINE INTERCHANGE 230KV CKT 1
13G	03ALL	'FROM->TO'	'HARPER - MILAN TAP 138KV CKT 1'	95.6	95.6	0.10922	153.9037	'GRAPEVINE INTERCHANGE - STATELINE INTERCHANGE 230KV CKT 1
13G	03ALL	'FROM->TO'	'HARPER - MILAN TAP 138KV CKT 1'	95.6	95.6	0.04922	153.9037	'GRAPEVINE INTERCHANGE - STATELINE INTERCHANGE 230KV CKT 1
13G	03ALL	'FROM->TO'	'HARPER - MILAN TAP 138KV CKT 1'	95.6	95.6	0.04922	153.9037	'GRAPEVINE INTERCHANGE - STATELINE INTERCHANGE 230KV CKT 1
13G	03ALL	'FROM->TO'	'HARPER - MILAN TAP 138KV CKT 1'	95.6	95.6	0.21083	153.9037	'GRAPEVINE INTERCHANGE - STATELINE INTERCHANGE 230KV CKT 1
13G	03ALL	'FROM->TO'	'HARPER - MILAN TAP 138KV CKT 1'	95.6	95.6	0.03873	153.9037	'GRAPEVINE INTERCHANGE - STATELINE INTERCHANGE 230KV CKT 1
13G	03ALL	'FROM->TO'	'HARPER - MILAN TAP 138KV CKT 1'	95.6	95.6	0.04053	153.9037	'GRAPEVINE INTERCHANGE - STATELINE INTERCHANGE 230KV CKT 1
13G	03ALL	'FROM->TO'	'HARPER - MILAN TAP 138KV CKT 1'	95.6	95.6	0.04053	153.9037	'GRAPEVINE INTERCHANGE - STATELINE INTERCHANGE 230KV CKT 1
13G	03ALL	'FROM->TO'	'HARPER - MILAN TAP 138KV CKT 1'	95.6	95.6	0.52705	153.9037	'GRAPEVINE INTERCHANGE - STATELINE INTERCHANGE 230KV CKT 1
13G	03ALL	'FROM->TO'	'HARPER - MILAN TAP 138KV CKT 1'	95.6	95.6	0.03813	153.9037	'GRAPEVINE INTERCHANGE - STATELINE INTERCHANGE 230KV CKT 1
13G	03ALL	'FROM->TO'	'HARPER - MILAN TAP 138KV CKT 1'	95.6	95.6	0.04351	153.9037	'GRAPEVINE INTERCHANGE - STATELINE INTERCHANGE 230KV CKT 1
13G	03ALL	'FROM->TO'	'HARPER - MILAN TAP 138KV CKT 1'	95.6	95.6	0.03751	153.9037	'GRAPEVINE INTERCHANGE - STATELINE INTERCHANGE 230KV CKT 1
13G	03ALL	'TO->FROM'	'MEDICINE LODGE - SUN CITY 115KV CKT 1'	120.7	129.5	0.17813	100.9057	'GRAPEVINE INTERCHANGE - STATELINE INTERCHANGE 230KV CKT 1
13G	03ALL	'TO->FROM'	'MEDICINE LODGE - SUN CITY 115KV CKT 1'	120.7	129.5	0.04538	100.9057	'GRAPEVINE INTERCHANGE - STATELINE INTERCHANGE 230KV CKT 1
13G	03ALL	'TO->FROM'	'MEDICINE LODGE - SUN CITY 115KV CKT 1'	120.7	129.5	0.04538	100.9057	'GRAPEVINE INTERCHANGE - STATELINE INTERCHANGE 230KV CKT 1
13G	03ALL	'TO->FROM'	'MEDICINE LODGE - SUN CITY 115KV CKT 1'	120.7	129.5	0.3994	100.9057	'GRAPEVINE INTERCHANGE - STATELINE INTERCHANGE 230KV CKT 1
13G	03ALL	'TO->FROM'	'MEDICINE LODGE - SUN CITY 115KV CKT 1'	120.7	129.5	0.03091	100.9057	'GRAPEVINE INTERCHANGE - STATELINE INTERCHANGE 230KV CKT 1
13G	03ALL	'TO->FROM'	'MEDICINE LODGE - SUN CITY 115KV CKT 1'	120.7	129.5	0.03508	100.9057	'GRAPEVINE INTERCHANGE - STATELINE INTERCHANGE 230KV CKT 1
13G	03ALL	'TO->FROM'	'MEDICINE LODGE - SUN CITY 115KV CKT 1'	120.7	129.5	0.03508	100.9057	'GRAPEVINE INTERCHANGE - STATELINE INTERCHANGE 230KV CKT 1
13G	03ALL	'TO->FROM'	'MEDICINE LODGE - SUN CITY 115KV CKT 1'	120.7	129.5	0.03095	100.9057	'GRAPEVINE INTERCHANGE - STATELINE INTERCHANGE 230KV CKT 1
13G	03ALL	'TO->FROM'	'MEDICINE LODGE - SUN CITY 115KV CKT 1'	120.7	129.5	0.03763	100.9057	'GRAPEVINE INTERCHANGE - STATELINE INTERCHANGE 230KV CKT 1
13G	03ALL	'TO->FROM'	'MEDICINE LODGE - SUN CITY 115KV CKT 1'	120.7	129.5	0.03247	100.9057	'GRAPEVINE INTERCHANGE - STATELINE INTERCHANGE 230KV CKT 1
13G	03ALL	'TO->FROM'	'BARBER 3 115.00 - MEDICINE LODGE 115KV CKT 1'	79.7	79.7	0.11653	100.3836	'GRAPEVINE INTERCHANGE - STATELINE INTERCHANGE 230KV CKT 1
13G	03ALL	'TO->FROM'	'BARBER 3 115.00 - MEDICINE LODGE 115KV CKT 1'	79.7	79.7	0.0354	100.3836	'GRAPEVINE INTERCHANGE - STATELINE INTERCHANGE 230KV CKT 1
13G	03ALL	'TO->FROM'	'BARBER 3 115.00 - MEDICINE LODGE 115KV CKT 1'	79.7	79.7	0.0354	100.3836	'GRAPEVINE INTERCHANGE - STATELINE INTERCHANGE 230KV CKT 1
13G	03ALL	'TO->FROM'	'BARBER 3 115.00 - MEDICINE LODGE 115KV CKT 1'	79.7	79.7	0.2522	100.3836	'GRAPEVINE INTERCHANGE - STATELINE INTERCHANGE 230KV CKT 1
13G	03ALL	'TO->FROM'	'BARBER 3 115.00 - MEDICINE LODGE 115KV CKT 1'	79.7	79.7	0.03008	100.3836	'GRAPEVINE INTERCHANGE - STATELINE INTERCHANGE 230KV CKT 1
13G	03ALL	'FROM->TO'	'SMOKYHL6 230.00 - SUMMIT 230KV CKT 1'	319	319	0.18604	106.4753	'AMARILLO SOUTH INTERCHANGE - SWISHER COUNTY INTERCHANGE 230KV CKT 1
13G	03ALL	'FROM->TO'	'SMOKYHL6 230.00 - SUMMIT 230KV CKT 1'	319	319	0.09038	106.4753	'AMARILLO SOUTH INTERCHANGE - SWISHER COUNTY INTERCHANGE 230KV CKT 1
13G	03ALL	'FROM->TO'	'SMOKYHL6 230.00 - SUMMIT 230KV CKT 1'	319	319	0.10396	106.4753	'AMARILLO SOUTH INTERCHANGE - SWISHER COUNTY INTERCHANGE 230KV CKT 1
13G	03ALL	'FROM->TO'	'SMOKYHL6 230.00 - SUMMIT 230KV CKT 1'	319	319	0.12298	106.4753	'AMARILLO SOUTH INTERCHANGE - SWISHER COUNTY INTERCHANGE 230KV CKT 1
13G	03ALL	'FROM->TO'	'SMOKYHL6 230.00 - SUMMIT 230KV CKT 1'	319	319	0.12298	106.4753	'AMARILLO SOUTH INTERCHANGE - SWISHER COUNTY INTERCHANGE 230KV CKT 1
13G	03ALL	'FROM->TO'	'SMOKYHL6 230.00 - SUMMIT 230KV CKT 1'	319	319	0.07863	106.4753	'AMARILLO SOUTH INTERCHANGE - SWISHER COUNTY INTERCHANGE 230KV CKT 1
13G	03ALL	'FROM->TO'	'SMOKYHL6 230.00 - SUMMIT 230KV CKT 1'	319	319	0.1008	106.4753	'AMARILLO SOUTH INTERCHANGE - SWISHER COUNTY INTERCHANGE 230KV CKT 1
13G	03ALL	'FROM->TO'	'SMOKYHL6 230.00 - SUMMIT 230KV CKT 1'	319	319	0.11596	106.4753	'AMARILLO SOUTH INTERCHANGE - SWISHER COUNTY INTERCHANGE 230KV CKT 1
13G	03ALL	'FROM->TO'	'SMOKYHL6 230.00 - SUMMIT 230KV CKT 1'	319	319	0.11596	106.4753	'AMARILLO SOUTH INTERCHANGE - SWISHER COUNTY INTERCHANGE 230KV CKT 1
13G	03ALL	'FROM->TO'	'SMOKYHL6 230.00 - SUMMIT 230KV CKT 1'	319	319	0.62674	106.4753	'AMARILLO SOUTH INTERCHANGE - SWISHER COUNTY INTERCHANGE 230KV CKT 1
13G	03ALL	'FROM->TO'	'SMOKYHL6 230.00 - SUMMIT 230KV CKT 1'	319	319	0.10079	106.4753	'AMARILLO SOUTH INTERCHANGE - SWISHER COUNTY INTERCHANGE 230KV CKT 1
13G	03ALL	'FROM->TO'	'SMOKYHL6 230.00 - SUMMIT 230KV CKT 1'	319	319	0.12816	106.4753	'AMARILLO SOUTH INTERCHANGE - SWISHER COUNTY INTERCHANGE 230KV CKT 1
13G	03ALL	'FROM->TO'	'SMOKYHL6 230.00 - SUMMIT 230KV CKT 1'	319	319	0.10359	106.4753	'AMARILLO SOUTH INTERCHANGE - SWISHER COUNTY INTERCHANGE 230KV CKT 1
13G	03ALL	'FROM->TO'	'SMOKYHL6 230.00 - SUMMIT 230KV CKT 1'	319	319	0.1895	106.5956	'KNOLL - SALINE RIVER 115KV CKT 1'
13G	03ALL	'FROM->TO'	'SMOKYHL6 230.00 - SUMMIT 230KV CKT 1'	319	319	0.08999	106.5956	'KNOLL - SALINE RIVER 115KV CKT 1'
13G	03ALL	'FROM->TO'	'SMOKYHL6 230.00 - SUMMIT 230KV CKT 1'	319	319	0.10447	106.5956	'KNOLL - SALINE RIVER 115KV CKT 1'
13G	03ALL	'FROM->TO'	'SMOKYHL6 230.00 - SUMMIT 230KV CKT 1'	319	319	0.12385	106.5956	'KNOLL - SALINE RIVER 115KV CKT 1'
13G	03ALL	'FROM->TO'	'SMOKYHL6 230.00 - SUMMIT 230KV CKT 1'	319	319	0.12385	106.5956	'KNOLL - SALINE RIVER 115KV CKT 1'
13G	03ALL	'FROM->TO'	'SMOKYHL6 230.00 - SUMMIT 230KV CKT 1'	319	319	0.07896	106.5956	'KNOLL - SALINE RIVER 115KV CKT 1'

SEASON	GROUP	DIRECTION	MONITORED ELEMENT	RATE A (MVA)	RATE B (MVA)	TDF	TC%LOADING (%MVA)	CONTINGENCY NAME
13G	03ALL	'FROM->TO'	'SMOKYHL6 230.00 - SUMMIT 230KV CKT 1'	319	319	0.10016	106.5956	'KNOLL - SALINE RIVER 115KV CKT 1'
13G	03ALL	'FROM->TO'	'SMOKYHL6 230.00 - SUMMIT 230KV CKT 1'	319	319	0.11628	106.5956	'KNOLL - SALINE RIVER 115KV CKT 1'
13G	03ALL	'FROM->TO'	'SMOKYHL6 230.00 - SUMMIT 230KV CKT 1'	319	319	0.11628	106.5956	'KNOLL - SALINE RIVER 115KV CKT 1'
13G	03ALL	'FROM->TO'	'SMOKYHL6 230.00 - SUMMIT 230KV CKT 1'	319	319	0.62813	106.5956	'KNOLL - SALINE RIVER 115KV CKT 1'
13G	03ALL	'FROM->TO'	'SMOKYHL6 230.00 - SUMMIT 230KV CKT 1'	319	319	0.0999	106.5956	'KNOLL - SALINE RIVER 115KV CKT 1'
13G	03ALL	'FROM->TO'	'SMOKYHL6 230.00 - SUMMIT 230KV CKT 1'	319	319	0.12908	106.5956	'KNOLL - SALINE RIVER 115KV CKT 1'
13G	03ALL	'FROM->TO'	'SMOKYHL6 230.00 - SUMMIT 230KV CKT 1'	319	319	0.10331	106.5956	'KNOLL - SALINE RIVER 115KV CKT 1'
13G	03ALL	'FROM->TO'	'SMOKYHL6 230.00 - SUMMIT 230KV CKT 1'	319	319	0.1895	106.3678	'PLAINVILLE - SALINE RIVER 115KV CKT 1'
13G	03ALL	'FROM->TO'	'SMOKYHL6 230.00 - SUMMIT 230KV CKT 1'	319	319	0.08999	106.3678	'PLAINVILLE - SALINE RIVER 115KV CKT 1'
13G	03ALL	'FROM->TO'	'SMOKYHL6 230.00 - SUMMIT 230KV CKT 1'	319	319	0.10447	106.3678	'PLAINVILLE - SALINE RIVER 115KV CKT 1'
13G	03ALL	'FROM->TO'	'SMOKYHL6 230.00 - SUMMIT 230KV CKT 1'	319	319	0.12385	106.3678	'PLAINVILLE - SALINE RIVER 115KV CKT 1'
13G	03ALL	'FROM->TO'	'SMOKYHL6 230.00 - SUMMIT 230KV CKT 1'	319	319	0.12385	106.3678	'PLAINVILLE - SALINE RIVER 115KV CKT 1'
13G	03ALL	'FROM->TO'	'SMOKYHL6 230.00 - SUMMIT 230KV CKT 1'	319	319	0.07896	106.3678	'PLAINVILLE - SALINE RIVER 115KV CKT 1'
13G	03ALL	'FROM->TO'	'SMOKYHL6 230.00 - SUMMIT 230KV CKT 1'	319	319	0.10016	106.3678	'PLAINVILLE - SALINE RIVER 115KV CKT 1'
13G	03ALL	'FROM->TO'	'SMOKYHL6 230.00 - SUMMIT 230KV CKT 1'	319	319	0.11628	106.3678	'PLAINVILLE - SALINE RIVER 115KV CKT 1'
13G	03ALL	'FROM->TO'	'SMOKYHL6 230.00 - SUMMIT 230KV CKT 1'	319	319	0.11628	106.3678	'PLAINVILLE - SALINE RIVER 115KV CKT 1'
13G	03ALL	'FROM->TO'	'SMOKYHL6 230.00 - SUMMIT 230KV CKT 1'	319	319	0.62813	106.3678	'PLAINVILLE - SALINE RIVER 115KV CKT 1'
13G	03ALL	'FROM->TO'	'SMOKYHL6 230.00 - SUMMIT 230KV CKT 1'	319	319	0.0999	106.3678	'PLAINVILLE - SALINE RIVER 115KV CKT 1'
13G	03ALL	'FROM->TO'	'SMOKYHL6 230.00 - SUMMIT 230KV CKT 1'	319	319	0.12908	106.3678	'PLAINVILLE - SALINE RIVER 115KV CKT 1'
13G	03ALL	'FROM->TO'	'SMOKYHL6 230.00 - SUMMIT 230KV CKT 1'	319	319	0.10331	106.3678	'PLAINVILLE - SALINE RIVER 115KV CKT 1'
13G	03ALL	'TO->FROM'	'HAYS PLANT - SOUTH HAYS 115KV CKT 1'	83	99	0.1618	122.247	'KNOLL 230 - POSTROCK6 230.00 230KV CKT 1
13G	03ALL	'TO->FROM'	'HAYS PLANT - SOUTH HAYS 115KV CKT 1'	83	99	0.05166	122.247	'KNOLL 230 - POSTROCK6 230.00 230KV CKT 1
13G	03ALL	'TO->FROM'	'HAYS PLANT - SOUTH HAYS 115KV CKT 1'	83	99	0.0579	122.247	'KNOLL 230 - POSTROCK6 230.00 230KV CKT 1
13G	03ALL	'TO->FROM'	'HAYS PLANT - SOUTH HAYS 115KV CKT 1'	83	99	0.07074	122.247	'KNOLL 230 - POSTROCK6 230.00 230KV CKT 1
13G	03ALL	'TO->FROM'	'HAYS PLANT - SOUTH HAYS 115KV CKT 1'	83	99	0.07074	122.247	'KNOLL 230 - POSTROCK6 230.00 230KV CKT 1
13G	03ALL	'TO->FROM'	'HAYS PLANT - SOUTH HAYS 115KV CKT 1'	83	99	0.04594	122.247	'KNOLL 230 - POSTROCK6 230.00 230KV CKT 1
13G	03ALL	'TO->FROM'	'HAYS PLANT - SOUTH HAYS 115KV CKT 1'	83	99	0.03652	122.247	'KNOLL 230 - POSTROCK6 230.00 230KV CKT 1
13G	03ALL	'TO->FROM'	'HAYS PLANT - SOUTH HAYS 115KV CKT 1'	83	99	0.05792	122.247	'KNOLL 230 - POSTROCK6 230.00 230KV CKT 1
13G	03ALL	'TO->FROM'	'HAYS PLANT - SOUTH HAYS 115KV CKT 1'	83	99	0.05792	122.247	'KNOLL 230 - POSTROCK6 230.00 230KV CKT 1
13G	03ALL	'TO->FROM'	'HAYS PLANT - SOUTH HAYS 115KV CKT 1'	83	99	0.0316	122.247	'KNOLL 230 - POSTROCK6 230.00 230KV CKT 1
13G	03ALL	'TO->FROM'	'HAYS PLANT - SOUTH HAYS 115KV CKT 1'	83	99	0.07121	122.247	'KNOLL 230 - POSTROCK6 230.00 230KV CKT 1
13G	03ALL	'TO->FROM'	'HAYS PLANT - SOUTH HAYS 115KV CKT 1'	83	99	0.04456	122.247	'KNOLL 230 - POSTROCK6 230.00 230KV CKT 1
13G	03ALL	'FROM->TO'	'HAYS PLANT - VINE STREET 115KV CKT 1'	80	88	0.1618	114.3706	'KNOLL 230 - POSTROCK6 230.00 230KV CKT 1
13G	03ALL	'FROM->TO'	'HAYS PLANT - VINE STREET 115KV CKT 1'	80	88	0.05166	114.3706	'KNOLL 230 - POSTROCK6 230.00 230KV CKT 1
13G	03ALL	'FROM->TO'	'HAYS PLANT - VINE STREET 115KV CKT 1'	80	88	0.0579	114.3706	'KNOLL 230 - POSTROCK6 230.00 230KV CKT 1
13G	03ALL	'FROM->TO'	'HAYS PLANT - VINE STREET 115KV CKT 1'	80	88	0.07074	114.3706	'KNOLL 230 - POSTROCK6 230.00 230KV CKT 1
13G	03ALL	'FROM->TO'	'HAYS PLANT - VINE STREET 115KV CKT 1'	80	88	0.07074	114.3706	'KNOLL 230 - POSTROCK6 230.00 230KV CKT 1
13G	03ALL	'FROM->TO'	'HAYS PLANT - VINE STREET 115KV CKT 1'	80	88	0.04594	114.3706	'KNOLL 230 - POSTROCK6 230.00 230KV CKT 1
13G	03ALL	'FROM->TO'	'HAYS PLANT - VINE STREET 115KV CKT 1'	80	88	0.03652	114.3706	'KNOLL 230 - POSTROCK6 230.00 230KV CKT 1
13G	03ALL	'FROM->TO'	'HAYS PLANT - VINE STREET 115KV CKT 1'	80	88	0.05792	114.3706	'KNOLL 230 - POSTROCK6 230.00 230KV CKT 1
13G	03ALL	'FROM->TO'	'HAYS PLANT - VINE STREET 115KV CKT 1'	80	88	0.05792	114.3706	'KNOLL 230 - POSTROCK6 230.00 230KV CKT 1
13G	03ALL	'FROM->TO'	'HAYS PLANT - VINE STREET 115KV CKT 1'	80	88	0.0316	114.3706	'KNOLL 230 - POSTROCK6 230.00 230KV CKT 1
13G	03ALL	'FROM->TO'	'HAYS PLANT - VINE STREET 115KV CKT 1'	80	88	0.07121	114.3706	'KNOLL 230 - POSTROCK6 230.00 230KV CKT 1
13G	03ALL	'FROM->TO'	'HAYS PLANT - VINE STREET 115KV CKT 1'	80	88	0.04456	114.3706	'KNOLL 230 - POSTROCK6 230.00 230KV CKT 1
13G	03ALL	'TO->FROM'	'GREENSBURG - SSTARTP3 115.00 115KV CKT 1	120.7	129.5	0.17923	109.6161	'KNOLL 230 - POSTROCK6 230.00 230KV CKT 1
13G	03ALL	'TO->FROM'	'GREENSBURG - SSTARTP3 115.00 115KV CKT 1	120.7	129.5	0.0468	109.6161	'KNOLL 230 - POSTROCK6 230.00 230KV CKT 1
13G	03ALL	'TO->FROM'	'GREENSBURG - SSTARTP3 115.00 115KV CKT 1	120.7	129.5	0.0468	109.6161	'KNOLL 230 - POSTROCK6 230.00 230KV CKT 1
13G	03ALL	'TO->FROM'	'GREENSBURG - SSTARTP3 115.00 115KV CKT 1	120.7	129.5	0.4003	109.6161	'KNOLL 230 - POSTROCK6 230.00 230KV CKT 1
13G	03ALL	'TO->FROM'	'GREENSBURG - SSTARTP3 115.00 115KV CKT 1	120.7	129.5	0.03125	109.6161	'KNOLL 230 - POSTROCK6 230.00 230KV CKT 1
13G	03ALL	'TO->FROM'	'GREENSBURG - SSTARTP3 115.00 115KV CKT 1	120.7	129.5	0.03599	109.6161	'KNOLL 230 - POSTROCK6 230.00 230KV CKT 1
13G	03ALL	'TO->FROM'	'GREENSBURG - SSTARTP3 115.00 115KV CKT 1	120.7	129.5	0.03599	109.6161	'KNOLL 230 - POSTROCK6 230.00 230KV CKT 1
13G	03ALL	'TO->FROM'	'GREENSBURG - SSTARTP3 115.00 115KV CKT 1	120.7	129.5	0.03124	109.6161	'KNOLL 230 - POSTROCK6 230.00 230KV CKT 1
13G	03ALL	'TO->FROM'	'GREENSBURG - SSTARTP3 115.00 115KV CKT 1	120.7	129.5	0.03913	109.6161	'KNOLL 230 - POSTROCK6 230.00 230KV CKT 1
13G	03ALL	'TO->FROM'	'GREENSBURG - SSTARTP3 115.00 115KV CKT 1	120.7	129.5	0.03281	109.6161	'KNOLL 230 - POSTROCK6 230.00 230KV CKT 1
13G	03ALL	'TO->FROM'	'CLEARWATER - MILAN TAP 138KV CKT 1'	110	110	0.04284	126.3199	'KNOLL 230 - SMOKYHL6 230.00 230KV CKT 1
13G	03ALL	'TO->FROM'	'CLEARWATER - MILAN TAP 138KV CKT 1'	110	110	0.06569	126.3199	'KNOLL 230 - SMOKYHL6 230.00 230KV CKT 1
13G	03ALL	'TO->FROM'	'CLEARWATER - MILAN TAP 138KV CKT 1'	110	110	0.11255	126.3199	'KNOLL 230 - SMOKYHL6 230.00 230KV CKT 1
13G	03ALL	'TO->FROM'	'CLEARWATER - MILAN TAP 138KV CKT 1'	110	110	0.05322	126.3199	'KNOLL 230 - SMOKYHL6 230.00 230KV CKT 1
13G	03ALL	'TO->FROM'	'CLEARWATER - MILAN TAP 138KV CKT 1'	110	110	0.05322	126.3199	'KNOLL 230 - SMOKYHL6 230.00 230KV CKT 1
13G	03ALL	'TO->FROM'	'CLEARWATER - MILAN TAP 138KV CKT 1'	110	110	0.21345	126.3199	'KNOLL 230 - SMOKYHL6 230.00 230KV CKT 1
13G	03ALL	'TO->FROM'	'CLEARWATER - MILAN TAP 138KV CKT 1'	110	110	0.04144	126.3199	'KNOLL 230 - SMOKYHL6 230.00 230KV CKT 1
13G	03ALL	'TO->FROM'	'CLEARWATER - MILAN TAP 138KV CKT 1'	110	110	0.0439	126.3199	'KNOLL 230 - SMOKYHL6 230.00 230KV CKT 1
13G	03ALL	'TO->FROM'	'CLEARWATER - MILAN TAP 138KV CKT 1'	110	110	0.0439	126.3199	'KNOLL 230 - SMOKYHL6 230.00 230KV CKT 1
13G	03ALL	'TO->FROM'	'CLEARWATER - MILAN TAP 138KV CKT 1'	110	110	0.52803	126.3199	'KNOLL 230 - SMOKYHL6 230.00 230KV CKT 1

SEASON	GROUP	DIRECTION	MONITORED ELEMENT	RATE A (MVA)	RATE B (MVA)	TDF	TC%LOADING (%MVA)	CONTINGENCY NAME
13G	03ALL	'TO->FROM'	'CLEARWATER - MILAN TAP 138KV CKT 1'	110	110	0.04087	126.3199	'KNOLL 230 - SMOKYHL6 230.00 230KV CKT 1
13G	03ALL	'TO->FROM'	'CLEARWATER - MILAN TAP 138KV CKT 1'	110	110	0.04764	126.3199	'KNOLL 230 - SMOKYHL6 230.00 230KV CKT 1
13G	03ALL	'TO->FROM'	'CLEARWATER - MILAN TAP 138KV CKT 1'	110	110	0.04009	126.3199	'KNOLL 230 - SMOKYHL6 230.00 230KV CKT 1
13G	03ALL	'FROM->TO'	'GREENSBURG - SUN CITY 115KV CKT 1'	120.7	129.5	0.18078	102.3359	'KNOLL 230 - SMOKYHL6 230.00 230KV CKT 1
13G	03ALL	'FROM->TO'	'GREENSBURG - SUN CITY 115KV CKT 1'	120.7	129.5	0.04858	102.3359	'KNOLL 230 - SMOKYHL6 230.00 230KV CKT 1
13G	03ALL	'FROM->TO'	'GREENSBURG - SUN CITY 115KV CKT 1'	120.7	129.5	0.04858	102.3359	'KNOLL 230 - SMOKYHL6 230.00 230KV CKT 1
13G	03ALL	'FROM->TO'	'GREENSBURG - SUN CITY 115KV CKT 1'	120.7	129.5	0.4015	102.3359	'KNOLL 230 - SMOKYHL6 230.00 230KV CKT 1
13G	03ALL	'FROM->TO'	'GREENSBURG - SUN CITY 115KV CKT 1'	120.7	129.5	0.03305	102.3359	'KNOLL 230 - SMOKYHL6 230.00 230KV CKT 1
13G	03ALL	'FROM->TO'	'GREENSBURG - SUN CITY 115KV CKT 1'	120.7	129.5	0.03774	102.3359	'KNOLL 230 - SMOKYHL6 230.00 230KV CKT 1
13G	03ALL	'FROM->TO'	'GREENSBURG - SUN CITY 115KV CKT 1'	120.7	129.5	0.03774	102.3359	'KNOLL 230 - SMOKYHL6 230.00 230KV CKT 1
13G	03ALL	'FROM->TO'	'GREENSBURG - SUN CITY 115KV CKT 1'	120.7	129.5	0.03312	102.3359	'KNOLL 230 - SMOKYHL6 230.00 230KV CKT 1
13G	03ALL	'FROM->TO'	'GREENSBURG - SUN CITY 115KV CKT 1'	120.7	129.5	0.04093	102.3359	'KNOLL 230 - SMOKYHL6 230.00 230KV CKT 1
13G	03ALL	'FROM->TO'	'GREENSBURG - SUN CITY 115KV CKT 1'	120.7	129.5	0.03449	102.3359	'KNOLL 230 - SMOKYHL6 230.00 230KV CKT 1
13G	03ALL	'TO->FROM'	'GREENSBURG - SSTARTP3 115.00 115KV CKT 1	120.7	129.5	0.18078	110.1906	'KNOLL 230 - SMOKYHL6 230.00 230KV CKT 1
13G	03ALL	'TO->FROM'	'GREENSBURG - SSTARTP3 115.00 115KV CKT 1	120.7	129.5	0.04858	110.1906	'KNOLL 230 - SMOKYHL6 230.00 230KV CKT 1
13G	03ALL	'TO->FROM'	'GREENSBURG - SSTARTP3 115.00 115KV CKT 1	120.7	129.5	0.04858	110.1906	'KNOLL 230 - SMOKYHL6 230.00 230KV CKT 1
13G	03ALL	'TO->FROM'	'GREENSBURG - SSTARTP3 115.00 115KV CKT 1	120.7	129.5	0.4015	110.1906	'KNOLL 230 - SMOKYHL6 230.00 230KV CKT 1
13G	03ALL	'TO->FROM'	'GREENSBURG - SSTARTP3 115.00 115KV CKT 1	120.7	129.5	0.03305	110.1906	'KNOLL 230 - SMOKYHL6 230.00 230KV CKT 1
13G	03ALL	'TO->FROM'	'GREENSBURG - SSTARTP3 115.00 115KV CKT 1	120.7	129.5	0.03774	110.1906	'KNOLL 230 - SMOKYHL6 230.00 230KV CKT 1
13G	03ALL	'TO->FROM'	'GREENSBURG - SSTARTP3 115.00 115KV CKT 1	120.7	129.5	0.03774	110.1906	'KNOLL 230 - SMOKYHL6 230.00 230KV CKT 1
13G	03ALL	'TO->FROM'	'GREENSBURG - SSTARTP3 115.00 115KV CKT 1	120.7	129.5	0.03312	110.1906	'KNOLL 230 - SMOKYHL6 230.00 230KV CKT 1
13G	03ALL	'TO->FROM'	'GREENSBURG - SSTARTP3 115.00 115KV CKT 1	120.7	129.5	0.04093	110.1906	'KNOLL 230 - SMOKYHL6 230.00 230KV CKT 1
13G	03ALL	'TO->FROM'	'GREENSBURG - SSTARTP3 115.00 115KV CKT 1	120.7	129.5	0.03449	110.1906	'KNOLL 230 - SMOKYHL6 230.00 230KV CKT 1
13G	03ALL	'FROM->TO'	'HARPER - MILAN TAP 138KV CKT 1'	95.6	95.6	0.04284	152.6398	'KNOLL 230 - SMOKYHL6 230.00 230KV CKT 1
13G	03ALL	'FROM->TO'	'HARPER - MILAN TAP 138KV CKT 1'	95.6	95.6	0.06569	152.6398	'KNOLL 230 - SMOKYHL6 230.00 230KV CKT 1
13G	03ALL	'FROM->TO'	'HARPER - MILAN TAP 138KV CKT 1'	95.6	95.6	0.11255	152.6398	'KNOLL 230 - SMOKYHL6 230.00 230KV CKT 1
13G	03ALL	'FROM->TO'	'HARPER - MILAN TAP 138KV CKT 1'	95.6	95.6	0.05322	152.6398	'KNOLL 230 - SMOKYHL6 230.00 230KV CKT 1
13G	03ALL	'FROM->TO'	'HARPER - MILAN TAP 138KV CKT 1'	95.6	95.6	0.05322	152.6398	'KNOLL 230 - SMOKYHL6 230.00 230KV CKT 1
13G	03ALL	'FROM->TO'	'HARPER - MILAN TAP 138KV CKT 1'	95.6	95.6	0.21345	152.6398	'KNOLL 230 - SMOKYHL6 230.00 230KV CKT 1
13G	03ALL	'FROM->TO'	'HARPER - MILAN TAP 138KV CKT 1'	95.6	95.6	0.04144	152.6398	'KNOLL 230 - SMOKYHL6 230.00 230KV CKT 1
13G	03ALL	'FROM->TO'	'HARPER - MILAN TAP 138KV CKT 1'	95.6	95.6	0.0439	152.6398	'KNOLL 230 - SMOKYHL6 230.00 230KV CKT 1
13G	03ALL	'FROM->TO'	'HARPER - MILAN TAP 138KV CKT 1'	95.6	95.6	0.0439	152.6398	'KNOLL 230 - SMOKYHL6 230.00 230KV CKT 1
13G	03ALL	'FROM->TO'	'HARPER - MILAN TAP 138KV CKT 1'	95.6	95.6	0.52803	152.6398	'KNOLL 230 - SMOKYHL6 230.00 230KV CKT 1
13G	03ALL	'FROM->TO'	'HARPER - MILAN TAP 138KV CKT 1'	95.6	95.6	0.04087	152.6398	'KNOLL 230 - SMOKYHL6 230.00 230KV CKT 1
13G	03ALL	'FROM->TO'	'HARPER - MILAN TAP 138KV CKT 1'	95.6	95.6	0.04764	152.6398	'KNOLL 230 - SMOKYHL6 230.00 230KV CKT 1
13G	03ALL	'FROM->TO'	'HARPER - MILAN TAP 138KV CKT 1'	95.6	95.6	0.04009	152.6398	'KNOLL 230 - SMOKYHL6 230.00 230KV CKT 1
13G	03ALL	'FROM->TO'	'SMOKYHL6 230.00 - SUMMIT 230KV CKT 1'	319	319	0.10442	103.0583	'POSTROCK6 230.00 - SOUTH HAYS 230KV CKT 1
13G	03ALL	'FROM->TO'	'SMOKYHL6 230.00 - SUMMIT 230KV CKT 1'	319	319	0.06625	103.0583	'POSTROCK6 230.00 - SOUTH HAYS 230KV CKT 1
13G	03ALL	'FROM->TO'	'SMOKYHL6 230.00 - SUMMIT 230KV CKT 1'	319	319	0.09999	103.0583	'POSTROCK6 230.00 - SOUTH HAYS 230KV CKT 1
13G	03ALL	'FROM->TO'	'SMOKYHL6 230.00 - SUMMIT 230KV CKT 1'	319	319	0.12004	103.0583	'POSTROCK6 230.00 - SOUTH HAYS 230KV CKT 1
13G	03ALL	'FROM->TO'	'SMOKYHL6 230.00 - SUMMIT 230KV CKT 1'	319	319	0.12004	103.0583	'POSTROCK6 230.00 - SOUTH HAYS 230KV CKT 1
13G	03ALL	'FROM->TO'	'SMOKYHL6 230.00 - SUMMIT 230KV CKT 1'	319	319	0.07216	103.0583	'POSTROCK6 230.00 - SOUTH HAYS 230KV CKT 1
13G	03ALL	'FROM->TO'	'SMOKYHL6 230.00 - SUMMIT 230KV CKT 1'	319	319	0.09936	103.0583	'POSTROCK6 230.00 - SOUTH HAYS 230KV CKT 1
13G	03ALL	'FROM->TO'	'SMOKYHL6 230.00 - SUMMIT 230KV CKT 1'	319	319	0.11706	103.0583	'POSTROCK6 230.00 - SOUTH HAYS 230KV CKT 1
13G	03ALL	'FROM->TO'	'SMOKYHL6 230.00 - SUMMIT 230KV CKT 1'	319	319	0.11706	103.0583	'POSTROCK6 230.00 - SOUTH HAYS 230KV CKT 1
13G	03ALL	'FROM->TO'	'SMOKYHL6 230.00 - SUMMIT 230KV CKT 1'	319	319	0.63592	103.0583	'POSTROCK6 230.00 - SOUTH HAYS 230KV CKT 1
13G	03ALL	'FROM->TO'	'SMOKYHL6 230.00 - SUMMIT 230KV CKT 1'	319	319	0.09968	103.0583	'POSTROCK6 230.00 - SOUTH HAYS 230KV CKT 1
13G	03ALL	'FROM->TO'	'SMOKYHL6 230.00 - SUMMIT 230KV CKT 1'	319	319	0.13005	103.0583	'POSTROCK6 230.00 - SOUTH HAYS 230KV CKT 1
13G	03ALL	'FROM->TO'	'SMOKYHL6 230.00 - SUMMIT 230KV CKT 1'	319	319	0.10392	103.0583	'POSTROCK6 230.00 - SOUTH HAYS 230KV CKT 1
13G	03ALL	'FROM->TO'	'SMOKYHL6 230.00 - SUMMIT 230KV CKT 1'	319	319	0.25156	111.991	'MULLERGREN - SOUTH HAYS 230KV CKT 1'
13G	03ALL	'FROM->TO'	'SMOKYHL6 230.00 - SUMMIT 230KV CKT 1'	319	319	0.04734	111.991	'MULLERGREN - SOUTH HAYS 230KV CKT 1'
13G	03ALL	'FROM->TO'	'SMOKYHL6 230.00 - SUMMIT 230KV CKT 1'	319	319	0.09647	111.991	'MULLERGREN - SOUTH HAYS 230KV CKT 1'
13G	03ALL	'FROM->TO'	'SMOKYHL6 230.00 - SUMMIT 230KV CKT 1'	319	319	0.1169	111.991	'MULLERGREN - SOUTH HAYS 230KV CKT 1'
13G	03ALL	'FROM->TO'	'SMOKYHL6 230.00 - SUMMIT 230KV CKT 1'	319	319	0.1169	111.991	'MULLERGREN - SOUTH HAYS 230KV CKT 1'
13G	03ALL	'FROM->TO'	'SMOKYHL6 230.00 - SUMMIT 230KV CKT 1'	319	319	0.06668	111.991	'MULLERGREN - SOUTH HAYS 230KV CKT 1'
13G	03ALL	'FROM->TO'	'SMOKYHL6 230.00 - SUMMIT 230KV CKT 1'	319	319	0.09996	111.991	'MULLERGREN - SOUTH HAYS 230KV CKT 1'
13G	03ALL	'FROM->TO'	'SMOKYHL6 230.00 - SUMMIT 230KV CKT 1'	319	319	0.11809	111.991	'MULLERGREN - SOUTH HAYS 230KV CKT 1'
13G	03ALL	'FROM->TO'	'SMOKYHL6 230.00 - SUMMIT 230KV CKT 1'	319	319	0.11809	111.991	'MULLERGREN - SOUTH HAYS 230KV CKT 1'
13G	03ALL	'FROM->TO'	'SMOKYHL6 230.00 - SUMMIT 230KV CKT 1'	319	319	0.64182	111.991	'MULLERGREN - SOUTH HAYS 230KV CKT 1'
13G	03ALL	'FROM->TO'	'SMOKYHL6 230.00 - SUMMIT 230KV CKT 1'	319	319	0.10103	111.991	'MULLERGREN - SOUTH HAYS 230KV CKT 1'
13G	03ALL	'FROM->TO'	'SMOKYHL6 230.00 - SUMMIT 230KV CKT 1'	319	319	0.13078	111.991	'MULLERGREN - SOUTH HAYS 230KV CKT 1'
13G	03ALL	'FROM->TO'	'SMOKYHL6 230.00 - SUMMIT 230KV CKT 1'	319	319	0.10523	111.991	'MULLERGREN - SOUTH HAYS 230KV CKT 1'
13G	03ALL	'TO->FROM'	'CLEARWATER - MILAN TAP 138KV CKT 1'	110	110	0.03043	135.4391	'POST ROCK - SPEARVILLE 345KV CKT 1'
13G	03ALL	'TO->FROM'	'CLEARWATER - MILAN TAP 138KV CKT 1'	110	110	0.06372	135.4391	'POST ROCK - SPEARVILLE 345KV CKT 1'

SEASON	GROUP	DIRECTION	MONITORED ELEMENT	RATE A (MVA)	RATE B (MVA)	TDF	TC%LOADING (%MVA)	CONTINGENCY NAME
13G	03ALL	'TO->FROM'	'CLEARWATER - MILAN TAP 138KV CKT 1'	110	110	0.11669	135.4391	'POST ROCK - SPEARVILLE 345KV CKT 1'
13G	03ALL	'TO->FROM'	'CLEARWATER - MILAN TAP 138KV CKT 1'	110	110	0.0586	135.4391	'POST ROCK - SPEARVILLE 345KV CKT 1'
13G	03ALL	'TO->FROM'	'CLEARWATER - MILAN TAP 138KV CKT 1'	110	110	0.0586	135.4391	'POST ROCK - SPEARVILLE 345KV CKT 1'
13G	03ALL	'TO->FROM'	'CLEARWATER - MILAN TAP 138KV CKT 1'	110	110	0.21627	135.4391	'POST ROCK - SPEARVILLE 345KV CKT 1'
13G	03ALL	'TO->FROM'	'CLEARWATER - MILAN TAP 138KV CKT 1'	110	110	0.04354	135.4391	'POST ROCK - SPEARVILLE 345KV CKT 1'
13G	03ALL	'TO->FROM'	'CLEARWATER - MILAN TAP 138KV CKT 1'	110	110	0.04902	135.4391	'POST ROCK - SPEARVILLE 345KV CKT 1'
13G	03ALL	'TO->FROM'	'CLEARWATER - MILAN TAP 138KV CKT 1'	110	110	0.04902	135.4391	'POST ROCK - SPEARVILLE 345KV CKT 1'
13G	03ALL	'TO->FROM'	'CLEARWATER - MILAN TAP 138KV CKT 1'	110	110	0.52856	135.4391	'POST ROCK - SPEARVILLE 345KV CKT 1'
13G	03ALL	'TO->FROM'	'CLEARWATER - MILAN TAP 138KV CKT 1'	110	110	0.04272	135.4391	'POST ROCK - SPEARVILLE 345KV CKT 1'
13G	03ALL	'TO->FROM'	'CLEARWATER - MILAN TAP 138KV CKT 1'	110	110	0.05441	135.4391	'POST ROCK - SPEARVILLE 345KV CKT 1'
13G	03ALL	'TO->FROM'	'CLEARWATER - MILAN TAP 138KV CKT 1'	110	110	0.04355	135.4391	'POST ROCK - SPEARVILLE 345KV CKT 1'
13G	03ALL	'FROM->TO'	'GREENSBURG - SUN CITY 115KV CKT 1'	120.7	129.5	0.19169	120.8179	'POST ROCK - SPEARVILLE 345KV CKT 1'
13G	03ALL	'FROM->TO'	'GREENSBURG - SUN CITY 115KV CKT 1'	120.7	129.5	0.06233	120.8179	'POST ROCK - SPEARVILLE 345KV CKT 1'
13G	03ALL	'FROM->TO'	'GREENSBURG - SUN CITY 115KV CKT 1'	120.7	129.5	0.06233	120.8179	'POST ROCK - SPEARVILLE 345KV CKT 1'
13G	03ALL	'FROM->TO'	'GREENSBURG - SUN CITY 115KV CKT 1'	120.7	129.5	0.4092	120.8179	'POST ROCK - SPEARVILLE 345KV CKT 1'
13G	03ALL	'FROM->TO'	'GREENSBURG - SUN CITY 115KV CKT 1'	120.7	129.5	0.0403	120.8179	'POST ROCK - SPEARVILLE 345KV CKT 1'
13G	03ALL	'FROM->TO'	'GREENSBURG - SUN CITY 115KV CKT 1'	120.7	129.5	0.05077	120.8179	'POST ROCK - SPEARVILLE 345KV CKT 1'
13G	03ALL	'FROM->TO'	'GREENSBURG - SUN CITY 115KV CKT 1'	120.7	129.5	0.05077	120.8179	'POST ROCK - SPEARVILLE 345KV CKT 1'
13G	03ALL	'FROM->TO'	'GREENSBURG - SUN CITY 115KV CKT 1'	120.7	129.5	0.03994	120.8179	'POST ROCK - SPEARVILLE 345KV CKT 1'
13G	03ALL	'FROM->TO'	'GREENSBURG - SUN CITY 115KV CKT 1'	120.7	129.5	0.05727	120.8179	'POST ROCK - SPEARVILLE 345KV CKT 1'
13G	03ALL	'FROM->TO'	'GREENSBURG - SUN CITY 115KV CKT 1'	120.7	129.5	0.0442	120.8179	'POST ROCK - SPEARVILLE 345KV CKT 1'
13G	03ALL	'TO->FROM'	'GREENSBURG - SSTARTP3 115.00 115KV CKT 1	120.7	129.5	0.19169	128.7055	'POST ROCK - SPEARVILLE 345KV CKT 1'
13G	03ALL	'TO->FROM'	'GREENSBURG - SSTARTP3 115.00 115KV CKT 1	120.7	129.5	0.06233	128.7055	'POST ROCK - SPEARVILLE 345KV CKT 1'
13G	03ALL	'TO->FROM'	'GREENSBURG - SSTARTP3 115.00 115KV CKT 1	120.7	129.5	0.06233	128.7055	'POST ROCK - SPEARVILLE 345KV CKT 1'
13G	03ALL	'TO->FROM'	'GREENSBURG - SSTARTP3 115.00 115KV CKT 1	120.7	129.5	0.4092	128.7055	'POST ROCK - SPEARVILLE 345KV CKT 1'
13G	03ALL	'TO->FROM'	'GREENSBURG - SSTARTP3 115.00 115KV CKT 1	120.7	129.5	0.0403	128.7055	'POST ROCK - SPEARVILLE 345KV CKT 1'
13G	03ALL	'TO->FROM'	'GREENSBURG - SSTARTP3 115.00 115KV CKT 1	120.7	129.5	0.05077	128.7055	'POST ROCK - SPEARVILLE 345KV CKT 1'
13G	03ALL	'TO->FROM'	'GREENSBURG - SSTARTP3 115.00 115KV CKT 1	120.7	129.5	0.05077	128.7055	'POST ROCK - SPEARVILLE 345KV CKT 1'
13G	03ALL	'TO->FROM'	'GREENSBURG - SSTARTP3 115.00 115KV CKT 1	120.7	129.5	0.03994	128.7055	'POST ROCK - SPEARVILLE 345KV CKT 1'
13G	03ALL	'TO->FROM'	'GREENSBURG - SSTARTP3 115.00 115KV CKT 1	120.7	129.5	0.05727	128.7055	'POST ROCK - SPEARVILLE 345KV CKT 1'
13G	03ALL	'TO->FROM'	'GREENSBURG - SSTARTP3 115.00 115KV CKT 1	120.7	129.5	0.0442	128.7055	'POST ROCK - SPEARVILLE 345KV CKT 1'
13G	03ALL	'FROM->TO'	'HARPER - MILAN TAP 138KV CKT 1'	95.6	95.6	0.03043	162.9005	'POST ROCK - SPEARVILLE 345KV CKT 1'
13G	03ALL	'FROM->TO'	'HARPER - MILAN TAP 138KV CKT 1'	95.6	95.6	0.06372	162.9005	'POST ROCK - SPEARVILLE 345KV CKT 1'
13G	03ALL	'FROM->TO'	'HARPER - MILAN TAP 138KV CKT 1'	95.6	95.6	0.11669	162.9005	'POST ROCK - SPEARVILLE 345KV CKT 1'
13G	03ALL	'FROM->TO'	'HARPER - MILAN TAP 138KV CKT 1'	95.6	95.6	0.0586	162.9005	'POST ROCK - SPEARVILLE 345KV CKT 1'
13G	03ALL	'FROM->TO'	'HARPER - MILAN TAP 138KV CKT 1'	95.6	95.6	0.0586	162.9005	'POST ROCK - SPEARVILLE 345KV CKT 1'
13G	03ALL	'FROM->TO'	'HARPER - MILAN TAP 138KV CKT 1'	95.6	95.6	0.21627	162.9005	'POST ROCK - SPEARVILLE 345KV CKT 1'
13G	03ALL	'FROM->TO'	'HARPER - MILAN TAP 138KV CKT 1'	95.6	95.6	0.04354	162.9005	'POST ROCK - SPEARVILLE 345KV CKT 1'
13G	03ALL	'FROM->TO'	'HARPER - MILAN TAP 138KV CKT 1'	95.6	95.6	0.04902	162.9005	'POST ROCK - SPEARVILLE 345KV CKT 1'
13G	03ALL	'FROM->TO'	'HARPER - MILAN TAP 138KV CKT 1'	95.6	95.6	0.04902	162.9005	'POST ROCK - SPEARVILLE 345KV CKT 1'
13G	03ALL	'FROM->TO'	'HARPER - MILAN TAP 138KV CKT 1'	95.6	95.6	0.52856	162.9005	'POST ROCK - SPEARVILLE 345KV CKT 1'
13G	03ALL	'FROM->TO'	'HARPER - MILAN TAP 138KV CKT 1'	95.6	95.6	0.04272	162.9005	'POST ROCK - SPEARVILLE 345KV CKT 1'
13G	03ALL	'FROM->TO'	'HARPER - MILAN TAP 138KV CKT 1'	95.6	95.6	0.05441	162.9005	'POST ROCK - SPEARVILLE 345KV CKT 1'
13G	03ALL	'FROM->TO'	'HARPER - MILAN TAP 138KV CKT 1'	95.6	95.6	0.04355	162.9005	'POST ROCK - SPEARVILLE 345KV CKT 1'
13G	03ALL	'TO->FROM'	'MEDICINE LODGE - SUN CITY 115KV CKT 1'	120.7	129.5	0.19169	118.1631	'POST ROCK - SPEARVILLE 345KV CKT 1'
13G	03ALL	'TO->FROM'	'MEDICINE LODGE - SUN CITY 115KV CKT 1'	120.7	129.5	0.06233	118.1631	'POST ROCK - SPEARVILLE 345KV CKT 1'
13G	03ALL	'TO->FROM'	'MEDICINE LODGE - SUN CITY 115KV CKT 1'	120.7	129.5	0.06233	118.1631	'POST ROCK - SPEARVILLE 345KV CKT 1'
13G	03ALL	'TO->FROM'	'MEDICINE LODGE - SUN CITY 115KV CKT 1'	120.7	129.5	0.4092	118.1631	'POST ROCK - SPEARVILLE 345KV CKT 1'
13G	03ALL	'TO->FROM'	'MEDICINE LODGE - SUN CITY 115KV CKT 1'	120.7	129.5	0.0403	118.1631	'POST ROCK - SPEARVILLE 345KV CKT 1'
13G	03ALL	'TO->FROM'	'MEDICINE LODGE - SUN CITY 115KV CKT 1'	120.7	129.5	0.05077	118.1631	'POST ROCK - SPEARVILLE 345KV CKT 1'
13G	03ALL	'TO->FROM'	'MEDICINE LODGE - SUN CITY 115KV CKT 1'	120.7	129.5	0.05077	118.1631	'POST ROCK - SPEARVILLE 345KV CKT 1'
13G	03ALL	'TO->FROM'	'MEDICINE LODGE - SUN CITY 115KV CKT 1'	120.7	129.5	0.03994	118.1631	'POST ROCK - SPEARVILLE 345KV CKT 1'
13G	03ALL	'TO->FROM'	'MEDICINE LODGE - SUN CITY 115KV CKT 1'	120.7	129.5	0.05727	118.1631	'POST ROCK - SPEARVILLE 345KV CKT 1'
13G	03ALL	'TO->FROM'	'MEDICINE LODGE - SUN CITY 115KV CKT 1'	120.7	129.5	0.0442	118.1631	'POST ROCK - SPEARVILLE 345KV CKT 1'
13G	03ALL	'TO->FROM'	'BARBER 3 115.00 - MEDICINE LODGE 115KV CKT 1'	79.7	79.7	0.12518	117.2868	'POST ROCK - SPEARVILLE 345KV CKT 1'
13G	03ALL	'TO->FROM'	'BARBER 3 115.00 - MEDICINE LODGE 115KV CKT 1'	79.7	79.7	0.04622	117.2868	'POST ROCK - SPEARVILLE 345KV CKT 1'
13G	03ALL	'TO->FROM'	'BARBER 3 115.00 - MEDICINE LODGE 115KV CKT 1'	79.7	79.7	0.04622	117.2868	'POST ROCK - SPEARVILLE 345KV CKT 1'
13G	03ALL	'TO->FROM'	'BARBER 3 115.00 - MEDICINE LODGE 115KV CKT 1'	79.7	79.7	0.25845	117.2868	'POST ROCK - SPEARVILLE 345KV CKT 1'
13G	03ALL	'TO->FROM'	'BARBER 3 115.00 - MEDICINE LODGE 115KV CKT 1'	79.7	79.7	0.03139	117.2868	'POST ROCK - SPEARVILLE 345KV CKT 1'
13G	03ALL	'TO->FROM'	'BARBER 3 115.00 - MEDICINE LODGE 115KV CKT 1'	79.7	79.7	0.03799	117.2868	'POST ROCK - SPEARVILLE 345KV CKT 1'
13G	03ALL	'TO->FROM'	'BARBER 3 115.00 - MEDICINE LODGE 115KV CKT 1'	79.7	79.7	0.03799	117.2868	'POST ROCK - SPEARVILLE 345KV CKT 1'
13G	03ALL	'TO->FROM'	'BARBER 3 115.00 - MEDICINE LODGE 115KV CKT 1'	79.7	79.7	0.031	117.2868	'POST ROCK - SPEARVILLE 345KV CKT 1'
13G	03ALL	'TO->FROM'	'BARBER 3 115.00 - MEDICINE LODGE 115KV CKT 1'	79.7	79.7	0.04262	117.2868	'POST ROCK - SPEARVILLE 345KV CKT 1'
13G	03ALL	'TO->FROM'	'BARBER 3 115.00 - MEDICINE LODGE 115KV CKT 1'	79.7	79.7	0.03331	117.2868	'POST ROCK - SPEARVILLE 345KV CKT 1'

SEASON	GROUP	DIRECTION	MONITORED ELEMENT	RATE A (MVA)	RATE B (MVA)	TDF	TC%LOADING (%MVA)	CONTINGENCY NAME
13G	03ALL	'TO->FROM'	'MULLERGREN - SPEARVILLE 230KV CKT 1'	330.3	355.3	0.2897	118.4309	'POST ROCK - SPEARVILLE 345KV CKT 1'
13G	03ALL	'TO->FROM'	'MULLERGREN - SPEARVILLE 230KV CKT 1'	330.3	355.3	0.38703	118.4309	'POST ROCK - SPEARVILLE 345KV CKT 1'
13G	03ALL	'TO->FROM'	'MULLERGREN - SPEARVILLE 230KV CKT 1'	330.3	355.3	0.38703	118.4309	'POST ROCK - SPEARVILLE 345KV CKT 1'
13G	03ALL	'TO->FROM'	'MULLERGREN - SPEARVILLE 230KV CKT 1'	330.3	355.3	0.18372	118.4309	'POST ROCK - SPEARVILLE 345KV CKT 1'
13G	03ALL	'TO->FROM'	'MULLERGREN - SPEARVILLE 230KV CKT 1'	330.3	355.3	0.17039	118.4309	'POST ROCK - SPEARVILLE 345KV CKT 1'
13G	03ALL	'TO->FROM'	'MULLERGREN - SPEARVILLE 230KV CKT 1'	330.3	355.3	0.28052	118.4309	'POST ROCK - SPEARVILLE 345KV CKT 1'
13G	03ALL	'TO->FROM'	'MULLERGREN - SPEARVILLE 230KV CKT 1'	330.3	355.3	0.28052	118.4309	'POST ROCK - SPEARVILLE 345KV CKT 1'
13G	03ALL	'TO->FROM'	'MULLERGREN - SPEARVILLE 230KV CKT 1'	330.3	355.3	0.1669	118.4309	'POST ROCK - SPEARVILLE 345KV CKT 1'
13G	03ALL	'TO->FROM'	'MULLERGREN - SPEARVILLE 230KV CKT 1'	330.3	355.3	0.34044	118.4309	'POST ROCK - SPEARVILLE 345KV CKT 1'
13G	03ALL	'TO->FROM'	'MULLERGREN - SPEARVILLE 230KV CKT 1'	330.3	355.3	0.22028	118.4309	'POST ROCK - SPEARVILLE 345KV CKT 1'
13G	03ALL	'FROM->TO'	'SMOKYHL6 230.00 - SUMMIT 230KV CKT 1'	319	319	0.24964	126.4742	'AXTELL - POST ROCK 345KV CKT 1'
13G	03ALL	'FROM->TO'	'SMOKYHL6 230.00 - SUMMIT 230KV CKT 1'	319	319	0.12655	126.4742	'AXTELL - POST ROCK 345KV CKT 1'
13G	03ALL	'FROM->TO'	'SMOKYHL6 230.00 - SUMMIT 230KV CKT 1'	319	319	0.14627	126.4742	'AXTELL - POST ROCK 345KV CKT 1'
13G	03ALL	'FROM->TO'	'SMOKYHL6 230.00 - SUMMIT 230KV CKT 1'	319	319	0.1729	126.4742	'AXTELL - POST ROCK 345KV CKT 1'
13G	03ALL	'FROM->TO'	'SMOKYHL6 230.00 - SUMMIT 230KV CKT 1'	319	319	0.1729	126.4742	'AXTELL - POST ROCK 345KV CKT 1'
13G	03ALL	'FROM->TO'	'SMOKYHL6 230.00 - SUMMIT 230KV CKT 1'	319	319	0.11454	126.4742	'AXTELL - POST ROCK 345KV CKT 1'
13G	03ALL	'FROM->TO'	'SMOKYHL6 230.00 - SUMMIT 230KV CKT 1'	319	319	0.12657	126.4742	'AXTELL - POST ROCK 345KV CKT 1'
13G	03ALL	'FROM->TO'	'SMOKYHL6 230.00 - SUMMIT 230KV CKT 1'	319	319	0.15709	126.4742	'AXTELL - POST ROCK 345KV CKT 1'
13G	03ALL	'FROM->TO'	'SMOKYHL6 230.00 - SUMMIT 230KV CKT 1'	319	319	0.15709	126.4742	'AXTELL - POST ROCK 345KV CKT 1'
13G	03ALL	'FROM->TO'	'SMOKYHL6 230.00 - SUMMIT 230KV CKT 1'	319	319	0.66233	126.4742	'AXTELL - POST ROCK 345KV CKT 1'
13G	03ALL	'FROM->TO'	'SMOKYHL6 230.00 - SUMMIT 230KV CKT 1'	319	319	0.04013	126.4742	'AXTELL - POST ROCK 345KV CKT 1'
13G	03ALL	'FROM->TO'	'SMOKYHL6 230.00 - SUMMIT 230KV CKT 1'	319	319	0.12531	126.4742	'AXTELL - POST ROCK 345KV CKT 1'
13G	03ALL	'FROM->TO'	'SMOKYHL6 230.00 - SUMMIT 230KV CKT 1'	319	319	0.17963	126.4742	'AXTELL - POST ROCK 345KV CKT 1'
13G	03ALL	'FROM->TO'	'SMOKYHL6 230.00 - SUMMIT 230KV CKT 1'	319	319	0.13434	126.4742	'AXTELL - POST ROCK 345KV CKT 1'
13G	03ALL	'TO->FROM'	'CLEARWATER - MILAN TAP 138KV CKT 1'	110	110	0.04578	132.5517	'AXTELL - POST ROCK 345KV CKT 1'
13G	03ALL	'TO->FROM'	'CLEARWATER - MILAN TAP 138KV CKT 1'	110	110	0.06801	132.5517	'AXTELL - POST ROCK 345KV CKT 1'
13G	03ALL	'TO->FROM'	'CLEARWATER - MILAN TAP 138KV CKT 1'	110	110	0.11534	132.5517	'AXTELL - POST ROCK 345KV CKT 1'
13G	03ALL	'TO->FROM'	'CLEARWATER - MILAN TAP 138KV CKT 1'	110	110	0.05648	132.5517	'AXTELL - POST ROCK 345KV CKT 1'
13G	03ALL	'TO->FROM'	'CLEARWATER - MILAN TAP 138KV CKT 1'	110	110	0.05648	132.5517	'AXTELL - POST ROCK 345KV CKT 1'
13G	03ALL	'TO->FROM'	'CLEARWATER - MILAN TAP 138KV CKT 1'	110	110	0.2162	132.5517	'AXTELL - POST ROCK 345KV CKT 1'
13G	03ALL	'TO->FROM'	'CLEARWATER - MILAN TAP 138KV CKT 1'	110	110	0.04176	132.5517	'AXTELL - POST ROCK 345KV CKT 1'
13G	03ALL	'TO->FROM'	'CLEARWATER - MILAN TAP 138KV CKT 1'	110	110	0.04607	132.5517	'AXTELL - POST ROCK 345KV CKT 1'
13G	03ALL	'TO->FROM'	'CLEARWATER - MILAN TAP 138KV CKT 1'	110	110	0.04607	132.5517	'AXTELL - POST ROCK 345KV CKT 1'
13G	03ALL	'TO->FROM'	'CLEARWATER - MILAN TAP 138KV CKT 1'	110	110	0.5305	132.5517	'AXTELL - POST ROCK 345KV CKT 1'
13G	03ALL	'TO->FROM'	'CLEARWATER - MILAN TAP 138KV CKT 1'	110	110	0.041	132.5517	'AXTELL - POST ROCK 345KV CKT 1'
13G	03ALL	'TO->FROM'	'CLEARWATER - MILAN TAP 138KV CKT 1'	110	110	0.05095	132.5517	'AXTELL - POST ROCK 345KV CKT 1'
13G	03ALL	'TO->FROM'	'CLEARWATER - MILAN TAP 138KV CKT 1'	110	110	0.04112	132.5517	'AXTELL - POST ROCK 345KV CKT 1'
13G	03ALL	'FROM->TO'	'GREENSBURG - SUN CITY 115KV CKT 1'	120.7	129.5	0.18182	106.3071	'AXTELL - POST ROCK 345KV CKT 1'
13G	03ALL	'FROM->TO'	'GREENSBURG - SUN CITY 115KV CKT 1'	120.7	129.5	0.04978	106.3071	'AXTELL - POST ROCK 345KV CKT 1'
13G	03ALL	'FROM->TO'	'GREENSBURG - SUN CITY 115KV CKT 1'	120.7	129.5	0.04978	106.3071	'AXTELL - POST ROCK 345KV CKT 1'
13G	03ALL	'FROM->TO'	'GREENSBURG - SUN CITY 115KV CKT 1'	120.7	129.5	0.40269	106.3071	'AXTELL - POST ROCK 345KV CKT 1'
13G	03ALL	'FROM->TO'	'GREENSBURG - SUN CITY 115KV CKT 1'	120.7	129.5	0.03256	106.3071	'AXTELL - POST ROCK 345KV CKT 1'
13G	03ALL	'FROM->TO'	'GREENSBURG - SUN CITY 115KV CKT 1'	120.7	129.5	0.0383	106.3071	'AXTELL - POST ROCK 345KV CKT 1'
13G	03ALL	'FROM->TO'	'GREENSBURG - SUN CITY 115KV CKT 1'	120.7	129.5	0.0383	106.3071	'AXTELL - POST ROCK 345KV CKT 1'
13G	03ALL	'FROM->TO'	'GREENSBURG - SUN CITY 115KV CKT 1'	120.7	129.5	0.0325	106.3071	'AXTELL - POST ROCK 345KV CKT 1'
13G	03ALL	'FROM->TO'	'GREENSBURG - SUN CITY 115KV CKT 1'	120.7	129.5	0.04213	106.3071	'AXTELL - POST ROCK 345KV CKT 1'
13G	03ALL	'FROM->TO'	'GREENSBURG - SUN CITY 115KV CKT 1'	120.7	129.5	0.03443	106.3071	'AXTELL - POST ROCK 345KV CKT 1'
13G	03ALL	'TO->FROM'	'GREENSBURG - SSTARTP3 115.00 115KV CKT 1	120.7	129.5	0.18182	114.2167	'AXTELL - POST ROCK 345KV CKT 1'
13G	03ALL	'TO->FROM'	'GREENSBURG - SSTARTP3 115.00 115KV CKT 1	120.7	129.5	0.04978	114.2167	'AXTELL - POST ROCK 345KV CKT 1'
13G	03ALL	'TO->FROM'	'GREENSBURG - SSTARTP3 115.00 115KV CKT 1	120.7	129.5	0.04978	114.2167	'AXTELL - POST ROCK 345KV CKT 1'
13G	03ALL	'TO->FROM'	'GREENSBURG - SSTARTP3 115.00 115KV CKT 1	120.7	129.5	0.40269	114.2167	'AXTELL - POST ROCK 345KV CKT 1'
13G	03ALL	'TO->FROM'	'GREENSBURG - SSTARTP3 115.00 115KV CKT 1	120.7	129.5	0.03256	114.2167	'AXTELL - POST ROCK 345KV CKT 1'
13G	03ALL	'TO->FROM'	'GREENSBURG - SSTARTP3 115.00 115KV CKT 1	120.7	129.5	0.0383	114.2167	'AXTELL - POST ROCK 345KV CKT 1'
13G	03ALL	'TO->FROM'	'GREENSBURG - SSTARTP3 115.00 115KV CKT 1	120.7	129.5	0.0383	114.2167	'AXTELL - POST ROCK 345KV CKT 1'
13G	03ALL	'TO->FROM'	'GREENSBURG - SSTARTP3 115.00 115KV CKT 1	120.7	129.5	0.0325	114.2167	'AXTELL - POST ROCK 345KV CKT 1'
13G	03ALL	'TO->FROM'	'GREENSBURG - SSTARTP3 115.00 115KV CKT 1	120.7	129.5	0.04213	114.2167	'AXTELL - POST ROCK 345KV CKT 1'
13G	03ALL	'TO->FROM'	'GREENSBURG - SSTARTP3 115.00 115KV CKT 1	120.7	129.5	0.03443	114.2167	'AXTELL - POST ROCK 345KV CKT 1'
13G	03ALL	'FROM->TO'	'HARPER - MILAN TAP 138KV CKT 1'	95.6	95.6	0.04578	159.6942	'AXTELL - POST ROCK 345KV CKT 1'
13G	03ALL	'FROM->TO'	'HARPER - MILAN TAP 138KV CKT 1'	95.6	95.6	0.06801	159.6942	'AXTELL - POST ROCK 345KV CKT 1'
13G	03ALL	'FROM->TO'	'HARPER - MILAN TAP 138KV CKT 1'	95.6	95.6	0.11534	159.6942	'AXTELL - POST ROCK 345KV CKT 1'
13G	03ALL	'FROM->TO'	'HARPER - MILAN TAP 138KV CKT 1'	95.6	95.6	0.05648	159.6942	'AXTELL - POST ROCK 345KV CKT 1'
13G	03ALL	'FROM->TO'	'HARPER - MILAN TAP 138KV CKT 1'	95.6	95.6	0.05648	159.6942	'AXTELL - POST ROCK 345KV CKT 1'
13G	03ALL	'FROM->TO'	'HARPER - MILAN TAP 138KV CKT 1'	95.6	95.6	0.2162	159.6942	'AXTELL - POST ROCK 345KV CKT 1'
13G	03ALL	'FROM->TO'	'HARPER - MILAN TAP 138KV CKT 1'	95.6	95.6	0.04176	159.6942	'AXTELL - POST ROCK 345KV CKT 1'

SEASON	GROUP	DIRECTION	MONITORED ELEMENT	RATE A (MVA)	RATE B (MVA)	TDF	TC%LOADING (%MVA)	CONTINGENCY NAME
13G	03ALL	'FROM->TO'	'HARPER - MILAN TAP 138KV CKT 1'	95.6	95.6	0.04607	159.6942	'AXTELL - POST ROCK 345KV CKT 1'
13G	03ALL	'FROM->TO'	'HARPER - MILAN TAP 138KV CKT 1'	95.6	95.6	0.04607	159.6942	'AXTELL - POST ROCK 345KV CKT 1'
13G	03ALL	'FROM->TO'	'HARPER - MILAN TAP 138KV CKT 1'	95.6	95.6	0.5305	159.6942	'AXTELL - POST ROCK 345KV CKT 1'
13G	03ALL	'FROM->TO'	'HARPER - MILAN TAP 138KV CKT 1'	95.6	95.6	0.041	159.6942	'AXTELL - POST ROCK 345KV CKT 1'
13G	03ALL	'FROM->TO'	'HARPER - MILAN TAP 138KV CKT 1'	95.6	95.6	0.05095	159.6942	'AXTELL - POST ROCK 345KV CKT 1'
13G	03ALL	'FROM->TO'	'HARPER - MILAN TAP 138KV CKT 1'	95.6	95.6	0.04112	159.6942	'AXTELL - POST ROCK 345KV CKT 1'
13G	03ALL	'TO->FROM'	'MEDICINE LODGE - SUN CITY 115KV CKT 1'	120.7	129.5	0.18182	103.7065	'AXTELL - POST ROCK 345KV CKT 1'
13G	03ALL	'TO->FROM'	'MEDICINE LODGE - SUN CITY 115KV CKT 1'	120.7	129.5	0.04978	103.7065	'AXTELL - POST ROCK 345KV CKT 1'
13G	03ALL	'TO->FROM'	'MEDICINE LODGE - SUN CITY 115KV CKT 1'	120.7	129.5	0.04978	103.7065	'AXTELL - POST ROCK 345KV CKT 1'
13G	03ALL	'TO->FROM'	'MEDICINE LODGE - SUN CITY 115KV CKT 1'	120.7	129.5	0.40269	103.7065	'AXTELL - POST ROCK 345KV CKT 1'
13G	03ALL	'TO->FROM'	'MEDICINE LODGE - SUN CITY 115KV CKT 1'	120.7	129.5	0.03256	103.7065	'AXTELL - POST ROCK 345KV CKT 1'
13G	03ALL	'TO->FROM'	'MEDICINE LODGE - SUN CITY 115KV CKT 1'	120.7	129.5	0.0383	103.7065	'AXTELL - POST ROCK 345KV CKT 1'
13G	03ALL	'TO->FROM'	'MEDICINE LODGE - SUN CITY 115KV CKT 1'	120.7	129.5	0.0383	103.7065	'AXTELL - POST ROCK 345KV CKT 1'
13G	03ALL	'TO->FROM'	'MEDICINE LODGE - SUN CITY 115KV CKT 1'	120.7	129.5	0.0325	103.7065	'AXTELL - POST ROCK 345KV CKT 1'
13G	03ALL	'TO->FROM'	'MEDICINE LODGE - SUN CITY 115KV CKT 1'	120.7	129.5	0.04213	103.7065	'AXTELL - POST ROCK 345KV CKT 1'
13G	03ALL	'TO->FROM'	'MEDICINE LODGE - SUN CITY 115KV CKT 1'	120.7	129.5	0.03443	103.7065	'AXTELL - POST ROCK 345KV CKT 1'
13G	03ALL	'TO->FROM'	'BARBER 3 115.00 - MEDICINE LODGE 115KV CKT 1'	79.7	79.7	0.11998	104.5772	'AXTELL - POST ROCK 345KV CKT 1'
13G	03ALL	'TO->FROM'	'BARBER 3 115.00 - MEDICINE LODGE 115KV CKT 1'	79.7	79.7	0.0395	104.5772	'AXTELL - POST ROCK 345KV CKT 1'
13G	03ALL	'TO->FROM'	'BARBER 3 115.00 - MEDICINE LODGE 115KV CKT 1'	79.7	79.7	0.0395	104.5772	'AXTELL - POST ROCK 345KV CKT 1'
13G	03ALL	'TO->FROM'	'BARBER 3 115.00 - MEDICINE LODGE 115KV CKT 1'	79.7	79.7	0.25524	104.5772	'AXTELL - POST ROCK 345KV CKT 1'
13G	03ALL	'TO->FROM'	'BARBER 3 115.00 - MEDICINE LODGE 115KV CKT 1'	79.7	79.7	0.03109	104.5772	'AXTELL - POST ROCK 345KV CKT 1'
13G	03ALL	'TO->FROM'	'BARBER 3 115.00 - MEDICINE LODGE 115KV CKT 1'	79.7	79.7	0.03109	104.5772	'AXTELL - POST ROCK 345KV CKT 1'
13G	03ALL	'TO->FROM'	'BARBER 3 115.00 - MEDICINE LODGE 115KV CKT 1'	79.7	79.7	0.03427	104.5772	'AXTELL - POST ROCK 345KV CKT 1'
13G	03ALL	'FROM->TO'	'SMOKYHL6 230.00 - SUMMIT 230KV CKT 1'	319	319	0.18897	106.9048	'HUNTSVILLE - ST_JOHN 115KV CKT 1'
13G	03ALL	'FROM->TO'	'SMOKYHL6 230.00 - SUMMIT 230KV CKT 1'	319	319	0.09988	106.9048	'HUNTSVILLE - ST_JOHN 115KV CKT 1'
13G	03ALL	'FROM->TO'	'SMOKYHL6 230.00 - SUMMIT 230KV CKT 1'	319	319	0.11025	106.9048	'HUNTSVILLE - ST_JOHN 115KV CKT 1'
13G	03ALL	'FROM->TO'	'SMOKYHL6 230.00 - SUMMIT 230KV CKT 1'	319	319	0.12646	106.9048	'HUNTSVILLE - ST_JOHN 115KV CKT 1'
13G	03ALL	'FROM->TO'	'SMOKYHL6 230.00 - SUMMIT 230KV CKT 1'	319	319	0.12646	106.9048	'HUNTSVILLE - ST_JOHN 115KV CKT 1'
13G	03ALL	'FROM->TO'	'SMOKYHL6 230.00 - SUMMIT 230KV CKT 1'	319	319	0.08983	106.9048	'HUNTSVILLE - ST_JOHN 115KV CKT 1'
13G	03ALL	'FROM->TO'	'SMOKYHL6 230.00 - SUMMIT 230KV CKT 1'	319	319	0.10349	106.9048	'HUNTSVILLE - ST_JOHN 115KV CKT 1'
13G	03ALL	'FROM->TO'	'SMOKYHL6 230.00 - SUMMIT 230KV CKT 1'	319	319	0.11858	106.9048	'HUNTSVILLE - ST_JOHN 115KV CKT 1'
13G	03ALL	'FROM->TO'	'SMOKYHL6 230.00 - SUMMIT 230KV CKT 1'	319	319	0.11858	106.9048	'HUNTSVILLE - ST_JOHN 115KV CKT 1'
13G	03ALL	'FROM->TO'	'SMOKYHL6 230.00 - SUMMIT 230KV CKT 1'	319	319	0.62641	106.9048	'HUNTSVILLE - ST_JOHN 115KV CKT 1'
13G	03ALL	'FROM->TO'	'SMOKYHL6 230.00 - SUMMIT 230KV CKT 1'	319	319	0.03454	106.9048	'HUNTSVILLE - ST_JOHN 115KV CKT 1'
13G	03ALL	'FROM->TO'	'SMOKYHL6 230.00 - SUMMIT 230KV CKT 1'	319	319	0.10338	106.9048	'HUNTSVILLE - ST_JOHN 115KV CKT 1'
13G	03ALL	'FROM->TO'	'SMOKYHL6 230.00 - SUMMIT 230KV CKT 1'	319	319	0.13115	106.9048	'HUNTSVILLE - ST_JOHN 115KV CKT 1'
13G	03ALL	'FROM->TO'	'SMOKYHL6 230.00 - SUMMIT 230KV CKT 1'	319	319	0.10584	106.9048	'HUNTSVILLE - ST_JOHN 115KV CKT 1'
13G	03ALL	'TO->FROM'	'CLEARWATER - MILAN TAP 138KV CKT 1'	110	110	0.04179	131.9652	'HUNTSVILLE - ST_JOHN 115KV CKT 1'
13G	03ALL	'TO->FROM'	'CLEARWATER - MILAN TAP 138KV CKT 1'	110	110	0.08012	131.9652	'HUNTSVILLE - ST_JOHN 115KV CKT 1'
13G	03ALL	'TO->FROM'	'CLEARWATER - MILAN TAP 138KV CKT 1'	110	110	0.12095	131.9652	'HUNTSVILLE - ST_JOHN 115KV CKT 1'
13G	03ALL	'TO->FROM'	'CLEARWATER - MILAN TAP 138KV CKT 1'	110	110	0.05594	131.9652	'HUNTSVILLE - ST_JOHN 115KV CKT 1'
13G	03ALL	'TO->FROM'	'CLEARWATER - MILAN TAP 138KV CKT 1'	110	110	0.05594	131.9652	'HUNTSVILLE - ST_JOHN 115KV CKT 1'
13G	03ALL	'TO->FROM'	'CLEARWATER - MILAN TAP 138KV CKT 1'	110	110	0.23139	131.9652	'HUNTSVILLE - ST_JOHN 115KV CKT 1'
13G	03ALL	'TO->FROM'	'CLEARWATER - MILAN TAP 138KV CKT 1'	110	110	0.0439	131.9652	'HUNTSVILLE - ST_JOHN 115KV CKT 1'
13G	03ALL	'TO->FROM'	'CLEARWATER - MILAN TAP 138KV CKT 1'	110	110	0.04561	131.9652	'HUNTSVILLE - ST_JOHN 115KV CKT 1'
13G	03ALL	'TO->FROM'	'CLEARWATER - MILAN TAP 138KV CKT 1'	110	110	0.04561	131.9652	'HUNTSVILLE - ST_JOHN 115KV CKT 1'
13G	03ALL	'TO->FROM'	'CLEARWATER - MILAN TAP 138KV CKT 1'	110	110	0.55362	131.9652	'HUNTSVILLE - ST_JOHN 115KV CKT 1'
13G	03ALL	'TO->FROM'	'CLEARWATER - MILAN TAP 138KV CKT 1'	110	110	0.04314	131.9652	'HUNTSVILLE - ST_JOHN 115KV CKT 1'
13G	03ALL	'TO->FROM'	'CLEARWATER - MILAN TAP 138KV CKT 1'	110	110	0.04932	131.9652	'HUNTSVILLE - ST_JOHN 115KV CKT 1'
13G	03ALL	'TO->FROM'	'CLEARWATER - MILAN TAP 138KV CKT 1'	110	110	0.04184	131.9652	'HUNTSVILLE - ST_JOHN 115KV CKT 1'
13G	03ALL	'TO->FROM'	'GREENSBURG - SSTARTP3 115.00 115KV CKT 1	120.7	129.5	0.17148	103.1551	'HUNTSVILLE - ST_JOHN 115KV CKT 1'
13G	03ALL	'TO->FROM'	'GREENSBURG - SSTARTP3 115.00 115KV CKT 1	120.7	129.5	0.04108	103.1551	'HUNTSVILLE - ST_JOHN 115KV CKT 1'
13G	03ALL	'TO->FROM'	'GREENSBURG - SSTARTP3 115.00 115KV CKT 1	120.7	129.5	0.04108	103.1551	'HUNTSVILLE - ST_JOHN 115KV CKT 1'
13G	03ALL	'TO->FROM'	'GREENSBURG - SSTARTP3 115.00 115KV CKT 1	120.7	129.5	0.38884	103.1551	'HUNTSVILLE - ST_JOHN 115KV CKT 1'
13G	03ALL	'TO->FROM'	'GREENSBURG - SSTARTP3 115.00 115KV CKT 1	120.7	129.5	0.03109	103.1551	'HUNTSVILLE - ST_JOHN 115KV CKT 1'
13G	03ALL	'TO->FROM'	'GREENSBURG - SSTARTP3 115.00 115KV CKT 1	120.7	129.5	0.03109	103.1551	'HUNTSVILLE - ST_JOHN 115KV CKT 1'
13G	03ALL	'TO->FROM'	'GREENSBURG - SSTARTP3 115.00 115KV CKT 1	120.7	129.5	0.03367	103.1551	'HUNTSVILLE - ST_JOHN 115KV CKT 1'
13G	03ALL	'FROM->TO'	'HARPER - MILAN TAP 138KV CKT 1'	95.6	95.6	0.04179	159.1692	'HUNTSVILLE - ST_JOHN 115KV CKT 1'
13G	03ALL	'FROM->TO'	'HARPER - MILAN TAP 138KV CKT 1'	95.6	95.6	0.08012	159.1692	'HUNTSVILLE - ST_JOHN 115KV CKT 1'
13G	03ALL	'FROM->TO'	'HARPER - MILAN TAP 138KV CKT 1'	95.6	95.6	0.12095	159.1692	'HUNTSVILLE - ST_JOHN 115KV CKT 1'
13G	03ALL	'FROM->TO'	'HARPER - MILAN TAP 138KV CKT 1'	95.6	95.6	0.05594	159.1692	'HUNTSVILLE - ST_JOHN 115KV CKT 1'
13G	03ALL	'FROM->TO'	'HARPER - MILAN TAP 138KV CKT 1'	95.6	95.6	0.05594	159.1692	'HUNTSVILLE - ST_JOHN 115KV CKT 1'
13G	03ALL	'FROM->TO'	'HARPER - MILAN TAP 138KV CKT 1'	95.6	95.6	0.23139	159.1692	'HUNTSVILLE - ST_JOHN 115KV CKT 1'
13G	03ALL	'FROM->TO'	'HARPER - MILAN TAP 138KV CKT 1'	95.6	95.6	0.0439	159.1692	'HUNTSVILLE - ST_JOHN 115KV CKT 1'

SEASON	GROUP	DIRECTION	MONITORED ELEMENT	RATE A (MVA)	RATE B (MVA)	TDF	TC%LOADING (%MVA)	CONTINGENCY NAME
13G	03ALL	'FROM->TO'	'HARPER - MILAN TAP 138KV CKT 1'	95.6	95.6	0.04561	159.1692	'HUNTSVILLE - ST_JOHN 115KV CKT 1'
13G	03ALL	'FROM->TO'	'HARPER - MILAN TAP 138KV CKT 1'	95.6	95.6	0.04561	159.1692	'HUNTSVILLE - ST_JOHN 115KV CKT 1'
13G	03ALL	'FROM->TO'	'HARPER - MILAN TAP 138KV CKT 1'	95.6	95.6	0.55362	159.1692	'HUNTSVILLE - ST_JOHN 115KV CKT 1'
13G	03ALL	'FROM->TO'	'HARPER - MILAN TAP 138KV CKT 1'	95.6	95.6	0.04314	159.1692	'HUNTSVILLE - ST_JOHN 115KV CKT 1'
13G	03ALL	'FROM->TO'	'HARPER - MILAN TAP 138KV CKT 1'	95.6	95.6	0.04932	159.1692	'HUNTSVILLE - ST_JOHN 115KV CKT 1'
13G	03ALL	'FROM->TO'	'HARPER - MILAN TAP 138KV CKT 1'	95.6	95.6	0.04184	159.1692	'HUNTSVILLE - ST_JOHN 115KV CKT 1'
13G	03ALL	'FROM->TO'	'SMOKYHL6 230.00 - SUMMIT 230KV CKT 1'	319	319	0.18897	106.7144	'HUNTSVILLE - HUTCHINSON ENERGY CENTER 115KV CKT 1
13G	03ALL	'FROM->TO'	'SMOKYHL6 230.00 - SUMMIT 230KV CKT 1'	319	319	0.09988	106.7144	'HUNTSVILLE - HUTCHINSON ENERGY CENTER 115KV CKT 1
13G	03ALL	'FROM->TO'	'SMOKYHL6 230.00 - SUMMIT 230KV CKT 1'	319	319	0.11025	106.7144	'HUNTSVILLE - HUTCHINSON ENERGY CENTER 115KV CKT 1
13G	03ALL	'FROM->TO'	'SMOKYHL6 230.00 - SUMMIT 230KV CKT 1'	319	319	0.12646	106.7144	'HUNTSVILLE - HUTCHINSON ENERGY CENTER 115KV CKT 1
13G	03ALL	'FROM->TO'	'SMOKYHL6 230.00 - SUMMIT 230KV CKT 1'	319	319	0.12646	106.7144	'HUNTSVILLE - HUTCHINSON ENERGY CENTER 115KV CKT 1
13G	03ALL	'FROM->TO'	'SMOKYHL6 230.00 - SUMMIT 230KV CKT 1'	319	319	0.08983	106.7144	'HUNTSVILLE - HUTCHINSON ENERGY CENTER 115KV CKT 1
13G	03ALL	'FROM->TO'	'SMOKYHL6 230.00 - SUMMIT 230KV CKT 1'	319	319	0.10349	106.7144	'HUNTSVILLE - HUTCHINSON ENERGY CENTER 115KV CKT 1
13G	03ALL	'FROM->TO'	'SMOKYHL6 230.00 - SUMMIT 230KV CKT 1'	319	319	0.11858	106.7144	'HUNTSVILLE - HUTCHINSON ENERGY CENTER 115KV CKT 1
13G	03ALL	'FROM->TO'	'SMOKYHL6 230.00 - SUMMIT 230KV CKT 1'	319	319	0.11858	106.7144	'HUNTSVILLE - HUTCHINSON ENERGY CENTER 115KV CKT 1
13G	03ALL	'FROM->TO'	'SMOKYHL6 230.00 - SUMMIT 230KV CKT 1'	319	319	0.62641	106.7144	'HUNTSVILLE - HUTCHINSON ENERGY CENTER 115KV CKT 1
13G	03ALL	'FROM->TO'	'SMOKYHL6 230.00 - SUMMIT 230KV CKT 1'	319	319	0.03454	106.7144	'HUNTSVILLE - HUTCHINSON ENERGY CENTER 115KV CKT 1
13G	03ALL	'FROM->TO'	'SMOKYHL6 230.00 - SUMMIT 230KV CKT 1'	319	319	0.10338	106.7144	'HUNTSVILLE - HUTCHINSON ENERGY CENTER 115KV CKT 1
13G	03ALL	'FROM->TO'	'SMOKYHL6 230.00 - SUMMIT 230KV CKT 1'	319	319	0.13115	106.7144	'HUNTSVILLE - HUTCHINSON ENERGY CENTER 115KV CKT 1
13G	03ALL	'FROM->TO'	'SMOKYHL6 230.00 - SUMMIT 230KV CKT 1'	319	319	0.10584	106.7144	'HUNTSVILLE - HUTCHINSON ENERGY CENTER 115KV CKT 1
13G	03ALL	'TO->FROM'	'CLEARWATER - MILAN TAP 138KV CKT 1'	110	110	0.04179	131.0004	'HUNTSVILLE - HUTCHINSON ENERGY CENTER 115KV CKT 1
13G	03ALL	'TO->FROM'	'CLEARWATER - MILAN TAP 138KV CKT 1'	110	110	0.08012	131.0004	'HUNTSVILLE - HUTCHINSON ENERGY CENTER 115KV CKT 1
13G	03ALL	'TO->FROM'	'CLEARWATER - MILAN TAP 138KV CKT 1'	110	110	0.12095	131.0004	'HUNTSVILLE - HUTCHINSON ENERGY CENTER 115KV CKT 1
13G	03ALL	'TO->FROM'	'CLEARWATER - MILAN TAP 138KV CKT 1'	110	110	0.05594	131.0004	'HUNTSVILLE - HUTCHINSON ENERGY CENTER 115KV CKT 1
13G	03ALL	'TO->FROM'	'CLEARWATER - MILAN TAP 138KV CKT 1'	110	110	0.05594	131.0004	'HUNTSVILLE - HUTCHINSON ENERGY CENTER 115KV CKT 1
13G	03ALL	'TO->FROM'	'CLEARWATER - MILAN TAP 138KV CKT 1'	110	110	0.23139	131.0004	'HUNTSVILLE - HUTCHINSON ENERGY CENTER 115KV CKT 1
13G	03ALL	'TO->FROM'	'CLEARWATER - MILAN TAP 138KV CKT 1'	110	110	0.0439	131.0004	'HUNTSVILLE - HUTCHINSON ENERGY CENTER 115KV CKT 1
13G	03ALL	'TO->FROM'	'CLEARWATER - MILAN TAP 138KV CKT 1'	110	110	0.04561	131.0004	'HUNTSVILLE - HUTCHINSON ENERGY CENTER 115KV CKT 1
13G	03ALL	'TO->FROM'	'CLEARWATER - MILAN TAP 138KV CKT 1'	110	110	0.04561	131.0004	'HUNTSVILLE - HUTCHINSON ENERGY CENTER 115KV CKT 1
13G	03ALL	'TO->FROM'	'CLEARWATER - MILAN TAP 138KV CKT 1'	110	110	0.55362	131.0004	'HUNTSVILLE - HUTCHINSON ENERGY CENTER 115KV CKT 1
13G	03ALL	'TO->FROM'	'CLEARWATER - MILAN TAP 138KV CKT 1'	110	110	0.04314	131.0004	'HUNTSVILLE - HUTCHINSON ENERGY CENTER 115KV CKT 1
13G	03ALL	'TO->FROM'	'CLEARWATER - MILAN TAP 138KV CKT 1'	110	110	0.04932	131.0004	'HUNTSVILLE - HUTCHINSON ENERGY CENTER 115KV CKT 1
13G	03ALL	'TO->FROM'	'CLEARWATER - MILAN TAP 138KV CKT 1'	110	110	0.04184	131.0004	'HUNTSVILLE - HUTCHINSON ENERGY CENTER 115KV CKT 1
13G	03ALL	'TO->FROM'	'GREENSBURG - SSTARTP3 115.00 115KV CKT 1	120.7	129.5	0.17148	103.5295	'HUNTSVILLE - HUTCHINSON ENERGY CENTER 115KV CKT 1
13G	03ALL	'TO->FROM'	'GREENSBURG - SSTARTP3 115.00 115KV CKT 1	120.7	129.5	0.04108	103.5295	'HUNTSVILLE - HUTCHINSON ENERGY CENTER 115KV CKT 1
13G	03ALL	'TO->FROM'	'GREENSBURG - SSTARTP3 115.00 115KV CKT 1	120.7	129.5	0.04108	103.5295	'HUNTSVILLE - HUTCHINSON ENERGY CENTER 115KV CKT 1
13G	03ALL	'TO->FROM'	'GREENSBURG - SSTARTP3 115.00 115KV CKT 1	120.7	129.5	0.38884	103.5295	'HUNTSVILLE - HUTCHINSON ENERGY CENTER 115KV CKT 1
13G	03ALL	'TO->FROM'	'GREENSBURG - SSTARTP3 115.00 115KV CKT 1	120.7	129.5	0.03109	103.5295	'HUNTSVILLE - HUTCHINSON ENERGY CENTER 115KV CKT 1
13G	03ALL	'TO->FROM'	'GREENSBURG - SSTARTP3 115.00 115KV CKT 1	120.7	129.5	0.03109	103.5295	'HUNTSVILLE - HUTCHINSON ENERGY CENTER 115KV CKT 1
13G	03ALL	'TO->FROM'	'GREENSBURG - SSTARTP3 115.00 115KV CKT 1	120.7	129.5	0.03367	103.5295	'HUNTSVILLE - HUTCHINSON ENERGY CENTER 115KV CKT 1
13G	03ALL	'FROM->TO'	'HARPER - MILAN TAP 138KV CKT 1'	95.6	95.6	0.04179	158.0638	'HUNTSVILLE - HUTCHINSON ENERGY CENTER 115KV CKT 1
13G	03ALL	'FROM->TO'	'HARPER - MILAN TAP 138KV CKT 1'	95.6	95.6	0.08012	158.0638	'HUNTSVILLE - HUTCHINSON ENERGY CENTER 115KV CKT 1
13G	03ALL	'FROM->TO'	'HARPER - MILAN TAP 138KV CKT 1'	95.6	95.6	0.12095	158.0638	'HUNTSVILLE - HUTCHINSON ENERGY CENTER 115KV CKT 1
13G	03ALL	'FROM->TO'	'HARPER - MILAN TAP 138KV CKT 1'	95.6	95.6	0.05594	158.0638	'HUNTSVILLE - HUTCHINSON ENERGY CENTER 115KV CKT 1
13G	03ALL	'FROM->TO'	'HARPER - MILAN TAP 138KV CKT 1'	95.6	95.6	0.05594	158.0638	'HUNTSVILLE - HUTCHINSON ENERGY CENTER 115KV CKT 1
13G	03ALL	'FROM->TO'	'HARPER - MILAN TAP 138KV CKT 1'	95.6	95.6	0.23139	158.0638	'HUNTSVILLE - HUTCHINSON ENERGY CENTER 115KV CKT 1
13G	03ALL	'FROM->TO'	'HARPER - MILAN TAP 138KV CKT 1'	95.6	95.6	0.0439	158.0638	'HUNTSVILLE - HUTCHINSON ENERGY CENTER 115KV CKT 1
13G	03ALL	'FROM->TO'	'HARPER - MILAN TAP 138KV CKT 1'	95.6	95.6	0.04561	158.0638	'HUNTSVILLE - HUTCHINSON ENERGY CENTER 115KV CKT 1
13G	03ALL	'FROM->TO'	'HARPER - MILAN TAP 138KV CKT 1'	95.6	95.6	0.04561	158.0638	'HUNTSVILLE - HUTCHINSON ENERGY CENTER 115KV CKT 1
13G	03ALL	'FROM->TO'	'HARPER - MILAN TAP 138KV CKT 1'	95.6	95.6	0.55362	158.0638	'HUNTSVILLE - HUTCHINSON ENERGY CENTER 115KV CKT 1
13G	03ALL	'FROM->TO'	'HARPER - MILAN TAP 138KV CKT 1'	95.6	95.6	0.04314	158.0638	'HUNTSVILLE - HUTCHINSON ENERGY CENTER 115KV CKT 1
13G	03ALL	'FROM->TO'	'HARPER - MILAN TAP 138KV CKT 1'	95.6	95.6	0.04932	158.0638	'HUNTSVILLE - HUTCHINSON ENERGY CENTER 115KV CKT 1
13G	03ALL	'FROM->TO'	'HARPER - MILAN TAP 138KV CKT 1'	95.6	95.6	0.04184	158.0638	'HUNTSVILLE - HUTCHINSON ENERGY CENTER 115KV CKT 1
13G	03ALL	'FROM->TO'	'SMOKYHL6 230.00 - SUMMIT 230KV CKT 1'	319	319	0.18897	108.217	'ST JOHN - ST_JOHN 115KV CKT 1'
13G	03ALL	'FROM->TO'	'SMOKYHL6 230.00 - SUMMIT 230KV CKT 1'	319	319	0.09988	108.217	'ST JOHN - ST_JOHN 115KV CKT 1'
13G	03ALL	'FROM->TO'	'SMOKYHL6 230.00 - SUMMIT 230KV CKT 1'	319	319	0.11025	108.217	'ST JOHN - ST_JOHN 115KV CKT 1'
13G	03ALL	'FROM->TO'	'SMOKYHL6 230.00 - SUMMIT 230KV CKT 1'	319	319	0.12646	108.217	'ST JOHN - ST_JOHN 115KV CKT 1'
13G	03ALL	'FROM->TO'	'SMOKYHL6 230.00 - SUMMIT 230KV CKT 1'	319	319	0.12646	108.217	'ST JOHN - ST_JOHN 115KV CKT 1'
13G	03ALL	'FROM->TO'	'SMOKYHL6 230.00 - SUMMIT 230KV CKT 1'	319	319	0.08983	108.217	'ST JOHN - ST_JOHN 115KV CKT 1'
13G	03ALL	'FROM->TO'	'SMOKYHL6 230.00 - SUMMIT 230KV CKT 1'	319	319	0.10349	108.217	'ST JOHN - ST_JOHN 115KV CKT 1'
13G	03ALL	'FROM->TO'	'SMOKYHL6 230.00 - SUMMIT 230KV CKT 1'	319	319	0.11858	108.217	'ST JOHN - ST_JOHN 115KV CKT 1'
13G	03ALL	'FROM->TO'	'SMOKYHL6 230.00 - SUMMIT 230KV CKT 1'	319	319	0.11858	108.217	'ST JOHN - ST_JOHN 115KV CKT 1'
13G	03ALL	'FROM->TO'	'SMOKYHL6 230.00 - SUMMIT 230KV CKT 1'	319	319	0.62641	108.217	'ST JOHN - ST_JOHN 115KV CKT 1'
13G	03ALL	'FROM->TO'	'SMOKYHL6 230.00 - SUMMIT 230KV CKT 1'	319	319	0.03454	108.217	'ST JOHN - ST_JOHN 115KV CKT 1'

SEASON	GROUP	DIRECTION	MONITORED ELEMENT	RATE A (MVA)	RATE B (MVA)	TDF	TC%LOADING (%MVA)	CONTINGENCY NAME
13G	03ALL	'FROM->TO'	'SMOKYHL6 230.00 - SUMMIT 230KV CKT 1'	319	319	0.10338	108.217	'ST JOHN - ST_JOHN 115KV CKT 1'
13G	03ALL	'FROM->TO'	'SMOKYHL6 230.00 - SUMMIT 230KV CKT 1'	319	319	0.13115	108.217	'ST JOHN - ST_JOHN 115KV CKT 1'
13G	03ALL	'FROM->TO'	'SMOKYHL6 230.00 - SUMMIT 230KV CKT 1'	319	319	0.10584	108.217	'ST JOHN - ST_JOHN 115KV CKT 1'
13G	03ALL	'TO->FROM'	'CLEARWATER - MILAN TAP 138KV CKT 1'	110	110	0.04179	138.1548	'ST JOHN - ST_JOHN 115KV CKT 1'
13G	03ALL	'TO->FROM'	'CLEARWATER - MILAN TAP 138KV CKT 1'	110	110	0.08012	138.1548	'ST JOHN - ST_JOHN 115KV CKT 1'
13G	03ALL	'TO->FROM'	'CLEARWATER - MILAN TAP 138KV CKT 1'	110	110	0.12095	138.1548	'ST JOHN - ST_JOHN 115KV CKT 1'
13G	03ALL	'TO->FROM'	'CLEARWATER - MILAN TAP 138KV CKT 1'	110	110	0.05594	138.1548	'ST JOHN - ST_JOHN 115KV CKT 1'
13G	03ALL	'TO->FROM'	'CLEARWATER - MILAN TAP 138KV CKT 1'	110	110	0.05594	138.1548	'ST JOHN - ST_JOHN 115KV CKT 1'
13G	03ALL	'TO->FROM'	'CLEARWATER - MILAN TAP 138KV CKT 1'	110	110	0.23139	138.1548	'ST JOHN - ST_JOHN 115KV CKT 1'
13G	03ALL	'TO->FROM'	'CLEARWATER - MILAN TAP 138KV CKT 1'	110	110	0.0439	138.1548	'ST JOHN - ST_JOHN 115KV CKT 1'
13G	03ALL	'TO->FROM'	'CLEARWATER - MILAN TAP 138KV CKT 1'	110	110	0.04561	138.1548	'ST JOHN - ST_JOHN 115KV CKT 1'
13G	03ALL	'TO->FROM'	'CLEARWATER - MILAN TAP 138KV CKT 1'	110	110	0.04561	138.1548	'ST JOHN - ST_JOHN 115KV CKT 1'
13G	03ALL	'TO->FROM'	'CLEARWATER - MILAN TAP 138KV CKT 1'	110	110	0.55362	138.1548	'ST JOHN - ST_JOHN 115KV CKT 1'
13G	03ALL	'TO->FROM'	'CLEARWATER - MILAN TAP 138KV CKT 1'	110	110	0.04314	138.1548	'ST JOHN - ST_JOHN 115KV CKT 1'
13G	03ALL	'TO->FROM'	'CLEARWATER - MILAN TAP 138KV CKT 1'	110	110	0.04932	138.1548	'ST JOHN - ST_JOHN 115KV CKT 1'
13G	03ALL	'TO->FROM'	'CLEARWATER - MILAN TAP 138KV CKT 1'	110	110	0.04184	138.1548	'ST JOHN - ST_JOHN 115KV CKT 1'
13G	03ALL	'TO->FROM'	'GREENSBURG - SSTARTP3 115.00 115KV CKT 1	120.7	129.5	0.17148	100.6998	'ST JOHN - ST_JOHN 115KV CKT 1'
13G	03ALL	'TO->FROM'	'GREENSBURG - SSTARTP3 115.00 115KV CKT 1	120.7	129.5	0.04108	100.6998	'ST JOHN - ST_JOHN 115KV CKT 1'
13G	03ALL	'TO->FROM'	'GREENSBURG - SSTARTP3 115.00 115KV CKT 1	120.7	129.5	0.04108	100.6998	'ST JOHN - ST_JOHN 115KV CKT 1'
13G	03ALL	'TO->FROM'	'GREENSBURG - SSTARTP3 115.00 115KV CKT 1	120.7	129.5	0.38884	100.6998	'ST JOHN - ST_JOHN 115KV CKT 1'
13G	03ALL	'TO->FROM'	'GREENSBURG - SSTARTP3 115.00 115KV CKT 1	120.7	129.5	0.03109	100.6998	'ST JOHN - ST_JOHN 115KV CKT 1'
13G	03ALL	'TO->FROM'	'GREENSBURG - SSTARTP3 115.00 115KV CKT 1	120.7	129.5	0.03109	100.6998	'ST JOHN - ST_JOHN 115KV CKT 1'
13G	03ALL	'TO->FROM'	'GREENSBURG - SSTARTP3 115.00 115KV CKT 1	120.7	129.5	0.03367	100.6998	'ST JOHN - ST_JOHN 115KV CKT 1'
13G	03ALL	'FROM->TO'	'HARPER - MILAN TAP 138KV CKT 1'	95.6	95.6	0.04179	166.2179	'ST JOHN - ST_JOHN 115KV CKT 1'
13G	03ALL	'FROM->TO'	'HARPER - MILAN TAP 138KV CKT 1'	95.6	95.6	0.08012	166.2179	'ST JOHN - ST_JOHN 115KV CKT 1'
13G	03ALL	'FROM->TO'	'HARPER - MILAN TAP 138KV CKT 1'	95.6	95.6	0.12095	166.2179	'ST JOHN - ST_JOHN 115KV CKT 1'
13G	03ALL	'FROM->TO'	'HARPER - MILAN TAP 138KV CKT 1'	95.6	95.6	0.05594	166.2179	'ST JOHN - ST_JOHN 115KV CKT 1'
13G	03ALL	'FROM->TO'	'HARPER - MILAN TAP 138KV CKT 1'	95.6	95.6	0.05594	166.2179	'ST JOHN - ST_JOHN 115KV CKT 1'
13G	03ALL	'FROM->TO'	'HARPER - MILAN TAP 138KV CKT 1'	95.6	95.6	0.23139	166.2179	'ST JOHN - ST_JOHN 115KV CKT 1'
13G	03ALL	'FROM->TO'	'HARPER - MILAN TAP 138KV CKT 1'	95.6	95.6	0.0439	166.2179	'ST JOHN - ST_JOHN 115KV CKT 1'
13G	03ALL	'FROM->TO'	'HARPER - MILAN TAP 138KV CKT 1'	95.6	95.6	0.04561	166.2179	'ST JOHN - ST_JOHN 115KV CKT 1'
13G	03ALL	'FROM->TO'	'HARPER - MILAN TAP 138KV CKT 1'	95.6	95.6	0.04561	166.2179	'ST JOHN - ST_JOHN 115KV CKT 1'
13G	03ALL	'FROM->TO'	'HARPER - MILAN TAP 138KV CKT 1'	95.6	95.6	0.55362	166.2179	'ST JOHN - ST_JOHN 115KV CKT 1'
13G	03ALL	'FROM->TO'	'HARPER - MILAN TAP 138KV CKT 1'	95.6	95.6	0.04314	166.2179	'ST JOHN - ST_JOHN 115KV CKT 1'
13G	03ALL	'FROM->TO'	'HARPER - MILAN TAP 138KV CKT 1'	95.6	95.6	0.04932	166.2179	'ST JOHN - ST_JOHN 115KV CKT 1'
13G	03ALL	'FROM->TO'	'HARPER - MILAN TAP 138KV CKT 1'	95.6	95.6	0.04184	166.2179	'ST JOHN - ST_JOHN 115KV CKT 1'
13G	03ALL	'FROM->TO'	'SMOKYHL6 230.00 - SUMMIT 230KV CKT 1'	319	319	0.20579	113.5236	'BUCKNER7 345.00 - HOLCOMB 345KV CKT 1'
13G	03ALL	'FROM->TO'	'SMOKYHL6 230.00 - SUMMIT 230KV CKT 1'	319	319	0.09781	113.5236	'BUCKNER7 345.00 - HOLCOMB 345KV CKT 1'
13G	03ALL	'FROM->TO'	'SMOKYHL6 230.00 - SUMMIT 230KV CKT 1'	319	319	0.12484	113.5236	'BUCKNER7 345.00 - HOLCOMB 345KV CKT 1'
13G	03ALL	'FROM->TO'	'SMOKYHL6 230.00 - SUMMIT 230KV CKT 1'	319	319	0.1587	113.5236	'BUCKNER7 345.00 - HOLCOMB 345KV CKT 1'
13G	03ALL	'FROM->TO'	'SMOKYHL6 230.00 - SUMMIT 230KV CKT 1'	319	319	0.1587	113.5236	'BUCKNER7 345.00 - HOLCOMB 345KV CKT 1'
13G	03ALL	'FROM->TO'	'SMOKYHL6 230.00 - SUMMIT 230KV CKT 1'	319	319	0.09638	113.5236	'BUCKNER7 345.00 - HOLCOMB 345KV CKT 1'
13G	03ALL	'FROM->TO'	'SMOKYHL6 230.00 - SUMMIT 230KV CKT 1'	319	319	0.07032	113.5236	'BUCKNER7 345.00 - HOLCOMB 345KV CKT 1'
13G	03ALL	'FROM->TO'	'SMOKYHL6 230.00 - SUMMIT 230KV CKT 1'	319	319	0.16777	113.5236	'BUCKNER7 345.00 - HOLCOMB 345KV CKT 1'
13G	03ALL	'FROM->TO'	'SMOKYHL6 230.00 - SUMMIT 230KV CKT 1'	319	319	0.16777	113.5236	'BUCKNER7 345.00 - HOLCOMB 345KV CKT 1'
13G	03ALL	'FROM->TO'	'SMOKYHL6 230.00 - SUMMIT 230KV CKT 1'	319	319	0.64015	113.5236	'BUCKNER7 345.00 - HOLCOMB 345KV CKT 1'
13G	03ALL	'FROM->TO'	'SMOKYHL6 230.00 - SUMMIT 230KV CKT 1'	319	319	0.03114	113.5236	'BUCKNER7 345.00 - HOLCOMB 345KV CKT 1'
13G	03ALL	'FROM->TO'	'SMOKYHL6 230.00 - SUMMIT 230KV CKT 1'	319	319	0.07129	113.5236	'BUCKNER7 345.00 - HOLCOMB 345KV CKT 1'
13G	03ALL	'FROM->TO'	'SMOKYHL6 230.00 - SUMMIT 230KV CKT 1'	319	319	0.16777	113.5236	'BUCKNER7 345.00 - HOLCOMB 345KV CKT 1'
13G	03ALL	'FROM->TO'	'SMOKYHL6 230.00 - SUMMIT 230KV CKT 1'	319	319	0.06347	113.5236	'BUCKNER7 345.00 - HOLCOMB 345KV CKT 1'
13G	03ALL	'TO->FROM'	'CLEARWATER - MILAN TAP 138KV CKT 1'	110	110	0.04096	128.9728	'BUCKNER7 345.00 - HOLCOMB 345KV CKT 1'
13G	03ALL	'TO->FROM'	'CLEARWATER - MILAN TAP 138KV CKT 1'	110	110	0.0643	128.9728	'BUCKNER7 345.00 - HOLCOMB 345KV CKT 1'
13G	03ALL	'TO->FROM'	'CLEARWATER - MILAN TAP 138KV CKT 1'	110	110	0.11422	128.9728	'BUCKNER7 345.00 - HOLCOMB 345KV CKT 1'
13G	03ALL	'TO->FROM'	'CLEARWATER - MILAN TAP 138KV CKT 1'	110	110	0.05808	128.9728	'BUCKNER7 345.00 - HOLCOMB 345KV CKT 1'
13G	03ALL	'TO->FROM'	'CLEARWATER - MILAN TAP 138KV CKT 1'	110	110	0.05808	128.9728	'BUCKNER7 345.00 - HOLCOMB 345KV CKT 1'
13G	03ALL	'TO->FROM'	'CLEARWATER - MILAN TAP 138KV CKT 1'	110	110	0.21526	128.9728	'BUCKNER7 345.00 - HOLCOMB 345KV CKT 1'
13G	03ALL	'TO->FROM'	'CLEARWATER - MILAN TAP 138KV CKT 1'	110	110	0.05333	128.9728	'BUCKNER7 345.00 - HOLCOMB 345KV CKT 1'
13G	03ALL	'TO->FROM'	'CLEARWATER - MILAN TAP 138KV CKT 1'	110	110	0.05333	128.9728	'BUCKNER7 345.00 - HOLCOMB 345KV CKT 1'
13G	03ALL	'TO->FROM'	'CLEARWATER - MILAN TAP 138KV CKT 1'	110	110	0.53028	128.9728	'BUCKNER7 345.00 - HOLCOMB 345KV CKT 1'
13G	03ALL	'TO->FROM'	'CLEARWATER - MILAN TAP 138KV CKT 1'	110	110	0.05333	128.9728	'BUCKNER7 345.00 - HOLCOMB 345KV CKT 1'
13G	03ALL	'FROM->TO'	'GREENSBURG - SUN CITY 115KV CKT 1'	120.7	129.5	0.18243	105.1526	'BUCKNER7 345.00 - HOLCOMB 345KV CKT 1'
13G	03ALL	'FROM->TO'	'GREENSBURG - SUN CITY 115KV CKT 1'	120.7	129.5	0.05301	105.1526	'BUCKNER7 345.00 - HOLCOMB 345KV CKT 1'
13G	03ALL	'FROM->TO'	'GREENSBURG - SUN CITY 115KV CKT 1'	120.7	129.5	0.05301	105.1526	'BUCKNER7 345.00 - HOLCOMB 345KV CKT 1'
13G	03ALL	'FROM->TO'	'GREENSBURG - SUN CITY 115KV CKT 1'	120.7	129.5	0.40321	105.1526	'BUCKNER7 345.00 - HOLCOMB 345KV CKT 1'

SEASON	GROUP	DIRECTION	MONITORED ELEMENT	RATE A (MVA)	RATE B (MVA)	TDF	TC%LOADING (%MVA)	CONTINGENCY NAME
13G	03ALL	'FROM->TO'	'GREENSBURG - SUN CITY 115KV CKT 1'	120.7	129.5	0.04609	105.1526	'BUCKNER7 345.00 - HOLCOMB 345KV CKT 1'
13G	03ALL	'FROM->TO'	'GREENSBURG - SUN CITY 115KV CKT 1'	120.7	129.5	0.04609	105.1526	'BUCKNER7 345.00 - HOLCOMB 345KV CKT 1'
13G	03ALL	'FROM->TO'	'GREENSBURG - SUN CITY 115KV CKT 1'	120.7	129.5	0.04609	105.1526	'BUCKNER7 345.00 - HOLCOMB 345KV CKT 1'
13G	03ALL	'TO->FROM'	'GREENSBURG - SSTARTP3 115.00 115KV CKT 1	120.7	129.5	0.18243	113.0237	'BUCKNER7 345.00 - HOLCOMB 345KV CKT 1'
13G	03ALL	'TO->FROM'	'GREENSBURG - SSTARTP3 115.00 115KV CKT 1	120.7	129.5	0.05301	113.0237	'BUCKNER7 345.00 - HOLCOMB 345KV CKT 1'
13G	03ALL	'TO->FROM'	'GREENSBURG - SSTARTP3 115.00 115KV CKT 1	120.7	129.5	0.05301	113.0237	'BUCKNER7 345.00 - HOLCOMB 345KV CKT 1'
13G	03ALL	'TO->FROM'	'GREENSBURG - SSTARTP3 115.00 115KV CKT 1	120.7	129.5	0.40321	113.0237	'BUCKNER7 345.00 - HOLCOMB 345KV CKT 1'
13G	03ALL	'TO->FROM'	'GREENSBURG - SSTARTP3 115.00 115KV CKT 1	120.7	129.5	0.04609	113.0237	'BUCKNER7 345.00 - HOLCOMB 345KV CKT 1'
13G	03ALL	'TO->FROM'	'GREENSBURG - SSTARTP3 115.00 115KV CKT 1	120.7	129.5	0.04609	113.0237	'BUCKNER7 345.00 - HOLCOMB 345KV CKT 1'
13G	03ALL	'TO->FROM'	'GREENSBURG - SSTARTP3 115.00 115KV CKT 1	120.7	129.5	0.04609	113.0237	'BUCKNER7 345.00 - HOLCOMB 345KV CKT 1'
13G	03ALL	'FROM->TO'	'HARPER - MILAN TAP 138KV CKT 1'	95.6	95.6	0.04096	155.659	'BUCKNER7 345.00 - HOLCOMB 345KV CKT 1'
13G	03ALL	'FROM->TO'	'HARPER - MILAN TAP 138KV CKT 1'	95.6	95.6	0.0643	155.659	'BUCKNER7 345.00 - HOLCOMB 345KV CKT 1'
13G	03ALL	'FROM->TO'	'HARPER - MILAN TAP 138KV CKT 1'	95.6	95.6	0.11422	155.659	'BUCKNER7 345.00 - HOLCOMB 345KV CKT 1'
13G	03ALL	'FROM->TO'	'HARPER - MILAN TAP 138KV CKT 1'	95.6	95.6	0.05808	155.659	'BUCKNER7 345.00 - HOLCOMB 345KV CKT 1'
13G	03ALL	'FROM->TO'	'HARPER - MILAN TAP 138KV CKT 1'	95.6	95.6	0.05808	155.659	'BUCKNER7 345.00 - HOLCOMB 345KV CKT 1'
13G	03ALL	'FROM->TO'	'HARPER - MILAN TAP 138KV CKT 1'	95.6	95.6	0.21526	155.659	'BUCKNER7 345.00 - HOLCOMB 345KV CKT 1'
13G	03ALL	'FROM->TO'	'HARPER - MILAN TAP 138KV CKT 1'	95.6	95.6	0.05333	155.659	'BUCKNER7 345.00 - HOLCOMB 345KV CKT 1'
13G	03ALL	'FROM->TO'	'HARPER - MILAN TAP 138KV CKT 1'	95.6	95.6	0.05333	155.659	'BUCKNER7 345.00 - HOLCOMB 345KV CKT 1'
13G	03ALL	'FROM->TO'	'HARPER - MILAN TAP 138KV CKT 1'	95.6	95.6	0.53028	155.659	'BUCKNER7 345.00 - HOLCOMB 345KV CKT 1'
13G	03ALL	'FROM->TO'	'HARPER - MILAN TAP 138KV CKT 1'	95.6	95.6	0.05333	155.659	'BUCKNER7 345.00 - HOLCOMB 345KV CKT 1'
13G	03ALL	'TO->FROM'	'MEDICINE LODGE - SUN CITY 115KV CKT 1'	120.7	129.5	0.18243	102.5627	'BUCKNER7 345.00 - HOLCOMB 345KV CKT 1'
13G	03ALL	'TO->FROM'	'MEDICINE LODGE - SUN CITY 115KV CKT 1'	120.7	129.5	0.05301	102.5627	'BUCKNER7 345.00 - HOLCOMB 345KV CKT 1'
13G	03ALL	'TO->FROM'	'MEDICINE LODGE - SUN CITY 115KV CKT 1'	120.7	129.5	0.05301	102.5627	'BUCKNER7 345.00 - HOLCOMB 345KV CKT 1'
13G	03ALL	'TO->FROM'	'MEDICINE LODGE - SUN CITY 115KV CKT 1'	120.7	129.5	0.40321	102.5627	'BUCKNER7 345.00 - HOLCOMB 345KV CKT 1'
13G	03ALL	'TO->FROM'	'MEDICINE LODGE - SUN CITY 115KV CKT 1'	120.7	129.5	0.04609	102.5627	'BUCKNER7 345.00 - HOLCOMB 345KV CKT 1'
13G	03ALL	'TO->FROM'	'MEDICINE LODGE - SUN CITY 115KV CKT 1'	120.7	129.5	0.04609	102.5627	'BUCKNER7 345.00 - HOLCOMB 345KV CKT 1'
13G	03ALL	'TO->FROM'	'MEDICINE LODGE - SUN CITY 115KV CKT 1'	120.7	129.5	0.04609	102.5627	'BUCKNER7 345.00 - HOLCOMB 345KV CKT 1'
13G	03ALL	'TO->FROM'	'BARBER 3 115.00 - MEDICINE LODGE 115KV CKT 1'	79.7	79.7	0.11998	102.3779	'BUCKNER7 345.00 - HOLCOMB 345KV CKT 1'
13G	03ALL	'TO->FROM'	'BARBER 3 115.00 - MEDICINE LODGE 115KV CKT 1'	79.7	79.7	0.04151	102.3779	'BUCKNER7 345.00 - HOLCOMB 345KV CKT 1'
13G	03ALL	'TO->FROM'	'BARBER 3 115.00 - MEDICINE LODGE 115KV CKT 1'	79.7	79.7	0.04151	102.3779	'BUCKNER7 345.00 - HOLCOMB 345KV CKT 1'
13G	03ALL	'TO->FROM'	'BARBER 3 115.00 - MEDICINE LODGE 115KV CKT 1'	79.7	79.7	0.25525	102.3779	'BUCKNER7 345.00 - HOLCOMB 345KV CKT 1'
13G	03ALL	'TO->FROM'	'BARBER 3 115.00 - MEDICINE LODGE 115KV CKT 1'	79.7	79.7	0.03684	102.3779	'BUCKNER7 345.00 - HOLCOMB 345KV CKT 1'
13G	03ALL	'TO->FROM'	'BARBER 3 115.00 - MEDICINE LODGE 115KV CKT 1'	79.7	79.7	0.03684	102.3779	'BUCKNER7 345.00 - HOLCOMB 345KV CKT 1'
13G	03ALL	'TO->FROM'	'BARBER 3 115.00 - MEDICINE LODGE 115KV CKT 1'	79.7	79.7	0.03684	102.3779	'BUCKNER7 345.00 - HOLCOMB 345KV CKT 1'
13G	03ALL	'FROM->TO'	'SMOKYHL6 230.00 - SUMMIT 230KV CKT 1'	319	319	0.18615	107.953	'MINGO - SETAB 345KV CKT 1'
13G	03ALL	'FROM->TO'	'SMOKYHL6 230.00 - SUMMIT 230KV CKT 1'	319	319	0.09081	107.953	'MINGO - SETAB 345KV CKT 1'
13G	03ALL	'FROM->TO'	'SMOKYHL6 230.00 - SUMMIT 230KV CKT 1'	319	319	0.10714	107.953	'MINGO - SETAB 345KV CKT 1'
13G	03ALL	'FROM->TO'	'SMOKYHL6 230.00 - SUMMIT 230KV CKT 1'	319	319	0.1261	107.953	'MINGO - SETAB 345KV CKT 1'
13G	03ALL	'FROM->TO'	'SMOKYHL6 230.00 - SUMMIT 230KV CKT 1'	319	319	0.1261	107.953	'MINGO - SETAB 345KV CKT 1'
13G	03ALL	'FROM->TO'	'SMOKYHL6 230.00 - SUMMIT 230KV CKT 1'	319	319	0.0809	107.953	'MINGO - SETAB 345KV CKT 1'
13G	03ALL	'FROM->TO'	'SMOKYHL6 230.00 - SUMMIT 230KV CKT 1'	319	319	0.10834	107.953	'MINGO - SETAB 345KV CKT 1'
13G	03ALL	'FROM->TO'	'SMOKYHL6 230.00 - SUMMIT 230KV CKT 1'	319	319	0.12122	107.953	'MINGO - SETAB 345KV CKT 1'
13G	03ALL	'FROM->TO'	'SMOKYHL6 230.00 - SUMMIT 230KV CKT 1'	319	319	0.12122	107.953	'MINGO - SETAB 345KV CKT 1'
13G	03ALL	'FROM->TO'	'SMOKYHL6 230.00 - SUMMIT 230KV CKT 1'	319	319	0.62635	107.953	'MINGO - SETAB 345KV CKT 1'
13G	03ALL	'FROM->TO'	'SMOKYHL6 230.00 - SUMMIT 230KV CKT 1'	319	319	0.10783	107.953	'MINGO - SETAB 345KV CKT 1'
13G	03ALL	'FROM->TO'	'SMOKYHL6 230.00 - SUMMIT 230KV CKT 1'	319	319	0.13163	107.953	'MINGO - SETAB 345KV CKT 1'
13G	03ALL	'FROM->TO'	'SMOKYHL6 230.00 - SUMMIT 230KV CKT 1'	319	319	0.11064	107.953	'MINGO - SETAB 345KV CKT 1'
13G	03ALL	'TO->FROM'	'CLEARWATER - MILAN TAP 138KV CKT 1'	110	110	0.03603	126.9029	'MINGO - SETAB 345KV CKT 1'
13G	03ALL	'TO->FROM'	'CLEARWATER - MILAN TAP 138KV CKT 1'	110	110	0.06286	126.9029	'MINGO - SETAB 345KV CKT 1'
13G	03ALL	'TO->FROM'	'CLEARWATER - MILAN TAP 138KV CKT 1'	110	110	0.11112	126.9029	'MINGO - SETAB 345KV CKT 1'
13G	03ALL	'TO->FROM'	'CLEARWATER - MILAN TAP 138KV CKT 1'	110	110	0.05102	126.9029	'MINGO - SETAB 345KV CKT 1'
13G	03ALL	'TO->FROM'	'CLEARWATER - MILAN TAP 138KV CKT 1'	110	110	0.05102	126.9029	'MINGO - SETAB 345KV CKT 1'
13G	03ALL	'TO->FROM'	'CLEARWATER - MILAN TAP 138KV CKT 1'	110	110	0.21232	126.9029	'MINGO - SETAB 345KV CKT 1'
13G	03ALL	'TO->FROM'	'CLEARWATER - MILAN TAP 138KV CKT 1'	110	110	0.04318	126.9029	'MINGO - SETAB 345KV CKT 1'
13G	03ALL	'TO->FROM'	'CLEARWATER - MILAN TAP 138KV CKT 1'	110	110	0.04351	126.9029	'MINGO - SETAB 345KV CKT 1'
13G	03ALL	'TO->FROM'	'CLEARWATER - MILAN TAP 138KV CKT 1'	110	110	0.04351	126.9029	'MINGO - SETAB 345KV CKT 1'
13G	03ALL	'TO->FROM'	'CLEARWATER - MILAN TAP 138KV CKT 1'	110	110	0.52775	126.9029	'MINGO - SETAB 345KV CKT 1'
13G	03ALL	'TO->FROM'	'CLEARWATER - MILAN TAP 138KV CKT 1'	110	110	0.04227	126.9029	'MINGO - SETAB 345KV CKT 1'
13G	03ALL	'TO->FROM'	'CLEARWATER - MILAN TAP 138KV CKT 1'	110	110	0.04549	126.9029	'MINGO - SETAB 345KV CKT 1'
13G	03ALL	'TO->FROM'	'CLEARWATER - MILAN TAP 138KV CKT 1'	110	110	0.04146	126.9029	'MINGO - SETAB 345KV CKT 1'
13G	03ALL	'FROM->TO'	'GREENSBURG - SUN CITY 115KV CKT 1'	120.7	129.5	0.18097	104.845	'MINGO - SETAB 345KV CKT 1'
13G	03ALL	'FROM->TO'	'GREENSBURG - SUN CITY 115KV CKT 1'	120.7	129.5	0.04814	104.845	'MINGO - SETAB 345KV CKT 1'
13G	03ALL	'FROM->TO'	'GREENSBURG - SUN CITY 115KV CKT 1'	120.7	129.5	0.04814	104.845	'MINGO - SETAB 345KV CKT 1'
13G	03ALL	'FROM->TO'	'GREENSBURG - SUN CITY 115KV CKT 1'	120.7	129.5	0.40158	104.845	'MINGO - SETAB 345KV CKT 1'

SEASON	GROUP	DIRECTION	MONITORED ELEMENT	RATE A (MVA)	RATE B (MVA)	TDF	TC%LOADING (%MVA)	CONTINGENCY NAME
13G	03ALL	'FROM->TO'	'GREENSBURG - SUN CITY 115KV CKT 1'	120.7	129.5	0.03738	104.845	'MINGO - SETAB 345KV CKT 1'
13G	03ALL	'FROM->TO'	'GREENSBURG - SUN CITY 115KV CKT 1'	120.7	129.5	0.03955	104.845	'MINGO - SETAB 345KV CKT 1'
13G	03ALL	'FROM->TO'	'GREENSBURG - SUN CITY 115KV CKT 1'	120.7	129.5	0.03955	104.845	'MINGO - SETAB 345KV CKT 1'
13G	03ALL	'FROM->TO'	'GREENSBURG - SUN CITY 115KV CKT 1'	120.7	129.5	0.037	104.845	'MINGO - SETAB 345KV CKT 1'
13G	03ALL	'FROM->TO'	'GREENSBURG - SUN CITY 115KV CKT 1'	120.7	129.5	0.04066	104.845	'MINGO - SETAB 345KV CKT 1'
13G	03ALL	'FROM->TO'	'GREENSBURG - SUN CITY 115KV CKT 1'	120.7	129.5	0.03838	104.845	'MINGO - SETAB 345KV CKT 1'
13G	03ALL	'TO->FROM'	'GREENSBURG - SSTARTP3 115.00 115KV CKT 1	120.7	129.5	0.18097	112.7084	'MINGO - SETAB 345KV CKT 1'
13G	03ALL	'TO->FROM'	'GREENSBURG - SSTARTP3 115.00 115KV CKT 1	120.7	129.5	0.04814	112.7084	'MINGO - SETAB 345KV CKT 1'
13G	03ALL	'TO->FROM'	'GREENSBURG - SSTARTP3 115.00 115KV CKT 1	120.7	129.5	0.04814	112.7084	'MINGO - SETAB 345KV CKT 1'
13G	03ALL	'TO->FROM'	'GREENSBURG - SSTARTP3 115.00 115KV CKT 1	120.7	129.5	0.40158	112.7084	'MINGO - SETAB 345KV CKT 1'
13G	03ALL	'TO->FROM'	'GREENSBURG - SSTARTP3 115.00 115KV CKT 1	120.7	129.5	0.03738	112.7084	'MINGO - SETAB 345KV CKT 1'
13G	03ALL	'TO->FROM'	'GREENSBURG - SSTARTP3 115.00 115KV CKT 1	120.7	129.5	0.03955	112.7084	'MINGO - SETAB 345KV CKT 1'
13G	03ALL	'TO->FROM'	'GREENSBURG - SSTARTP3 115.00 115KV CKT 1	120.7	129.5	0.03955	112.7084	'MINGO - SETAB 345KV CKT 1'
13G	03ALL	'TO->FROM'	'GREENSBURG - SSTARTP3 115.00 115KV CKT 1	120.7	129.5	0.037	112.7084	'MINGO - SETAB 345KV CKT 1'
13G	03ALL	'TO->FROM'	'GREENSBURG - SSTARTP3 115.00 115KV CKT 1	120.7	129.5	0.04066	112.7084	'MINGO - SETAB 345KV CKT 1'
13G	03ALL	'TO->FROM'	'GREENSBURG - SSTARTP3 115.00 115KV CKT 1	120.7	129.5	0.03838	112.7084	'MINGO - SETAB 345KV CKT 1'
13G	03ALL	'FROM->TO'	'HARPER - MILAN TAP 138KV CKT 1'	95.6	95.6	0.03603	153.2977	'MINGO - SETAB 345KV CKT 1'
13G	03ALL	'FROM->TO'	'HARPER - MILAN TAP 138KV CKT 1'	95.6	95.6	0.06286	153.2977	'MINGO - SETAB 345KV CKT 1'
13G	03ALL	'FROM->TO'	'HARPER - MILAN TAP 138KV CKT 1'	95.6	95.6	0.11112	153.2977	'MINGO - SETAB 345KV CKT 1'
13G	03ALL	'FROM->TO'	'HARPER - MILAN TAP 138KV CKT 1'	95.6	95.6	0.05102	153.2977	'MINGO - SETAB 345KV CKT 1'
13G	03ALL	'FROM->TO'	'HARPER - MILAN TAP 138KV CKT 1'	95.6	95.6	0.05102	153.2977	'MINGO - SETAB 345KV CKT 1'
13G	03ALL	'FROM->TO'	'HARPER - MILAN TAP 138KV CKT 1'	95.6	95.6	0.21232	153.2977	'MINGO - SETAB 345KV CKT 1'
13G	03ALL	'FROM->TO'	'HARPER - MILAN TAP 138KV CKT 1'	95.6	95.6	0.04318	153.2977	'MINGO - SETAB 345KV CKT 1'
13G	03ALL	'FROM->TO'	'HARPER - MILAN TAP 138KV CKT 1'	95.6	95.6	0.04351	153.2977	'MINGO - SETAB 345KV CKT 1'
13G	03ALL	'FROM->TO'	'HARPER - MILAN TAP 138KV CKT 1'	95.6	95.6	0.04351	153.2977	'MINGO - SETAB 345KV CKT 1'
13G	03ALL	'FROM->TO'	'HARPER - MILAN TAP 138KV CKT 1'	95.6	95.6	0.52775	153.2977	'MINGO - SETAB 345KV CKT 1'
13G	03ALL	'FROM->TO'	'HARPER - MILAN TAP 138KV CKT 1'	95.6	95.6	0.04227	153.2977	'MINGO - SETAB 345KV CKT 1'
13G	03ALL	'FROM->TO'	'HARPER - MILAN TAP 138KV CKT 1'	95.6	95.6	0.04549	153.2977	'MINGO - SETAB 345KV CKT 1'
13G	03ALL	'FROM->TO'	'HARPER - MILAN TAP 138KV CKT 1'	95.6	95.6	0.04146	153.2977	'MINGO - SETAB 345KV CKT 1'
13G	03ALL	'TO->FROM'	'MEDICINE LODGE - SUN CITY 115KV CKT 1'	120.7	129.5	0.18097	102.2634	'MINGO - SETAB 345KV CKT 1'
13G	03ALL	'TO->FROM'	'MEDICINE LODGE - SUN CITY 115KV CKT 1'	120.7	129.5	0.04814	102.2634	'MINGO - SETAB 345KV CKT 1'
13G	03ALL	'TO->FROM'	'MEDICINE LODGE - SUN CITY 115KV CKT 1'	120.7	129.5	0.04814	102.2634	'MINGO - SETAB 345KV CKT 1'
13G	03ALL	'TO->FROM'	'MEDICINE LODGE - SUN CITY 115KV CKT 1'	120.7	129.5	0.40158	102.2634	'MINGO - SETAB 345KV CKT 1'
13G	03ALL	'TO->FROM'	'MEDICINE LODGE - SUN CITY 115KV CKT 1'	120.7	129.5	0.03738	102.2634	'MINGO - SETAB 345KV CKT 1'
13G	03ALL	'TO->FROM'	'MEDICINE LODGE - SUN CITY 115KV CKT 1'	120.7	129.5	0.03955	102.2634	'MINGO - SETAB 345KV CKT 1'
13G	03ALL	'TO->FROM'	'MEDICINE LODGE - SUN CITY 115KV CKT 1'	120.7	129.5	0.03955	102.2634	'MINGO - SETAB 345KV CKT 1'
13G	03ALL	'TO->FROM'	'MEDICINE LODGE - SUN CITY 115KV CKT 1'	120.7	129.5	0.037	102.2634	'MINGO - SETAB 345KV CKT 1'
13G	03ALL	'TO->FROM'	'MEDICINE LODGE - SUN CITY 115KV CKT 1'	120.7	129.5	0.04066	102.2634	'MINGO - SETAB 345KV CKT 1'
13G	03ALL	'TO->FROM'	'MEDICINE LODGE - SUN CITY 115KV CKT 1'	120.7	129.5	0.03838	102.2634	'MINGO - SETAB 345KV CKT 1'
13G	03ALL	'TO->FROM'	'BARBER 3 115.00 - MEDICINE LODGE 115KV CKT 1'	79.7	79.7	0.11844	101.4092	'MINGO - SETAB 345KV CKT 1'
13G	03ALL	'TO->FROM'	'BARBER 3 115.00 - MEDICINE LODGE 115KV CKT 1'	79.7	79.7	0.03724	101.4092	'MINGO - SETAB 345KV CKT 1'
13G	03ALL	'TO->FROM'	'BARBER 3 115.00 - MEDICINE LODGE 115KV CKT 1'	79.7	79.7	0.03724	101.4092	'MINGO - SETAB 345KV CKT 1'
13G	03ALL	'TO->FROM'	'BARBER 3 115.00 - MEDICINE LODGE 115KV CKT 1'	79.7	79.7	0.25367	101.4092	'MINGO - SETAB 345KV CKT 1'
13G	03ALL	'TO->FROM'	'BARBER 3 115.00 - MEDICINE LODGE 115KV CKT 1'	79.7	79.7	0.03102	101.4092	'MINGO - SETAB 345KV CKT 1'
13G	03ALL	'TO->FROM'	'BARBER 3 115.00 - MEDICINE LODGE 115KV CKT 1'	79.7	79.7	0.03102	101.4092	'MINGO - SETAB 345KV CKT 1'
13G	03ALL	'TO->FROM'	'BARBER 3 115.00 - MEDICINE LODGE 115KV CKT 1'	79.7	79.7	0.03209	101.4092	'MINGO - SETAB 345KV CKT 1'
13G	03ALL	'TO->FROM'	'BARBER 3 115.00 - MEDICINE LODGE 115KV CKT 1'	79.7	79.7	0.0299	101.4092	'MINGO - SETAB 345KV CKT 1'
13G	03ALL	'FROM->TO'	'SMOKYHL6 230.00 - SUMMIT 230KV CKT 1'	319	319	0.18906	108.4888	'MINGO - RED WILLOW 345KV CKT 1'
13G	03ALL	'FROM->TO'	'SMOKYHL6 230.00 - SUMMIT 230KV CKT 1'	319	319	0.09768	108.4888	'MINGO - RED WILLOW 345KV CKT 1'
13G	03ALL	'FROM->TO'	'SMOKYHL6 230.00 - SUMMIT 230KV CKT 1'	319	319	0.1114	108.4888	'MINGO - RED WILLOW 345KV CKT 1'
13G	03ALL	'FROM->TO'	'SMOKYHL6 230.00 - SUMMIT 230KV CKT 1'	319	319	0.13017	108.4888	'MINGO - RED WILLOW 345KV CKT 1'
13G	03ALL	'FROM->TO'	'SMOKYHL6 230.00 - SUMMIT 230KV CKT 1'	319	319	0.13017	108.4888	'MINGO - RED WILLOW 345KV CKT 1'
13G	03ALL	'FROM->TO'	'SMOKYHL6 230.00 - SUMMIT 230KV CKT 1'	319	319	0.08443	108.4888	'MINGO - RED WILLOW 345KV CKT 1'
13G	03ALL	'FROM->TO'	'SMOKYHL6 230.00 - SUMMIT 230KV CKT 1'	319	319	0.11659	108.4888	'MINGO - RED WILLOW 345KV CKT 1'
13G	03ALL	'FROM->TO'	'SMOKYHL6 230.00 - SUMMIT 230KV CKT 1'	319	319	0.1264	108.4888	'MINGO - RED WILLOW 345KV CKT 1'
13G	03ALL	'FROM->TO'	'SMOKYHL6 230.00 - SUMMIT 230KV CKT 1'	319	319	0.1264	108.4888	'MINGO - RED WILLOW 345KV CKT 1'
13G	03ALL	'FROM->TO'	'SMOKYHL6 230.00 - SUMMIT 230KV CKT 1'	319	319	0.62767	108.4888	'MINGO - RED WILLOW 345KV CKT 1'
13G	03ALL	'FROM->TO'	'SMOKYHL6 230.00 - SUMMIT 230KV CKT 1'	319	319	0.11729	108.4888	'MINGO - RED WILLOW 345KV CKT 1'
13G	03ALL	'FROM->TO'	'SMOKYHL6 230.00 - SUMMIT 230KV CKT 1'	319	319	0.13579	108.4888	'MINGO - RED WILLOW 345KV CKT 1'
13G	03ALL	'FROM->TO'	'SMOKYHL6 230.00 - SUMMIT 230KV CKT 1'	319	319	0.11683	108.4888	'MINGO - RED WILLOW 345KV CKT 1'
13G	03ALL	'TO->FROM'	'CLEARWATER - MILAN TAP 138KV CKT 1'	110	110	0.03745	126.7472	'MINGO - RED WILLOW 345KV CKT 1'
13G	03ALL	'TO->FROM'	'CLEARWATER - MILAN TAP 138KV CKT 1'	110	110	0.06629	126.7472	'MINGO - RED WILLOW 345KV CKT 1'
13G	03ALL	'TO->FROM'	'CLEARWATER - MILAN TAP 138KV CKT 1'	110	110	0.11276	126.7472	'MINGO - RED WILLOW 345KV CKT 1'
13G	03ALL	'TO->FROM'	'CLEARWATER - MILAN TAP 138KV CKT 1'	110	110	0.05257	126.7472	'MINGO - RED WILLOW 345KV CKT 1'

SEASON	GROUP	DIRECTION	MONITORED ELEMENT	RATE A (MVA)	RATE B (MVA)	TDF	TC%LOADING (%MVA)	CONTINGENCY NAME
13G	03ALL	'TO->FROM'	'CLEARWATER - MILAN TAP 138KV CKT 1'	110	110	0.05257	126.7472	'MINGO - RED WILLOW 345KV CKT 1'
13G	03ALL	'TO->FROM'	'CLEARWATER - MILAN TAP 138KV CKT 1'	110	110	0.21374	126.7472	'MINGO - RED WILLOW 345KV CKT 1'
13G	03ALL	'TO->FROM'	'CLEARWATER - MILAN TAP 138KV CKT 1'	110	110	0.04623	126.7472	'MINGO - RED WILLOW 345KV CKT 1'
13G	03ALL	'TO->FROM'	'CLEARWATER - MILAN TAP 138KV CKT 1'	110	110	0.0453	126.7472	'MINGO - RED WILLOW 345KV CKT 1'
13G	03ALL	'TO->FROM'	'CLEARWATER - MILAN TAP 138KV CKT 1'	110	110	0.0453	126.7472	'MINGO - RED WILLOW 345KV CKT 1'
13G	03ALL	'TO->FROM'	'CLEARWATER - MILAN TAP 138KV CKT 1'	110	110	0.52855	126.7472	'MINGO - RED WILLOW 345KV CKT 1'
13G	03ALL	'TO->FROM'	'CLEARWATER - MILAN TAP 138KV CKT 1'	110	110	0.04603	126.7472	'MINGO - RED WILLOW 345KV CKT 1'
13G	03ALL	'TO->FROM'	'CLEARWATER - MILAN TAP 138KV CKT 1'	110	110	0.04703	126.7472	'MINGO - RED WILLOW 345KV CKT 1'
13G	03ALL	'TO->FROM'	'CLEARWATER - MILAN TAP 138KV CKT 1'	110	110	0.0435	126.7472	'MINGO - RED WILLOW 345KV CKT 1'
13G	03ALL	'FROM->TO'	'GREENSBURG - SUN CITY 115KV CKT 1'	120.7	129.5	0.18151	103.1768	'MINGO - RED WILLOW 345KV CKT 1'
13G	03ALL	'FROM->TO'	'GREENSBURG - SUN CITY 115KV CKT 1'	120.7	129.5	0.0486	103.1768	'MINGO - RED WILLOW 345KV CKT 1'
13G	03ALL	'FROM->TO'	'GREENSBURG - SUN CITY 115KV CKT 1'	120.7	129.5	0.0486	103.1768	'MINGO - RED WILLOW 345KV CKT 1'
13G	03ALL	'FROM->TO'	'GREENSBURG - SUN CITY 115KV CKT 1'	120.7	129.5	0.40217	103.1768	'MINGO - RED WILLOW 345KV CKT 1'
13G	03ALL	'FROM->TO'	'GREENSBURG - SUN CITY 115KV CKT 1'	120.7	129.5	0.03807	103.1768	'MINGO - RED WILLOW 345KV CKT 1'
13G	03ALL	'FROM->TO'	'GREENSBURG - SUN CITY 115KV CKT 1'	120.7	129.5	0.03965	103.1768	'MINGO - RED WILLOW 345KV CKT 1'
13G	03ALL	'FROM->TO'	'GREENSBURG - SUN CITY 115KV CKT 1'	120.7	129.5	0.03965	103.1768	'MINGO - RED WILLOW 345KV CKT 1'
13G	03ALL	'FROM->TO'	'GREENSBURG - SUN CITY 115KV CKT 1'	120.7	129.5	0.03848	103.1768	'MINGO - RED WILLOW 345KV CKT 1'
13G	03ALL	'FROM->TO'	'GREENSBURG - SUN CITY 115KV CKT 1'	120.7	129.5	0.04102	103.1768	'MINGO - RED WILLOW 345KV CKT 1'
13G	03ALL	'FROM->TO'	'GREENSBURG - SUN CITY 115KV CKT 1'	120.7	129.5	0.03823	103.1768	'MINGO - RED WILLOW 345KV CKT 1'
13G	03ALL	'TO->FROM'	'GREENSBURG - SSTARTP3 115.00 115KV CKT 1	120.7	129.5	0.18151	111.0244	'MINGO - RED WILLOW 345KV CKT 1'
13G	03ALL	'TO->FROM'	'GREENSBURG - SSTARTP3 115.00 115KV CKT 1	120.7	129.5	0.0486	111.0244	'MINGO - RED WILLOW 345KV CKT 1'
13G	03ALL	'TO->FROM'	'GREENSBURG - SSTARTP3 115.00 115KV CKT 1	120.7	129.5	0.0486	111.0244	'MINGO - RED WILLOW 345KV CKT 1'
13G	03ALL	'TO->FROM'	'GREENSBURG - SSTARTP3 115.00 115KV CKT 1	120.7	129.5	0.40217	111.0244	'MINGO - RED WILLOW 345KV CKT 1'
13G	03ALL	'TO->FROM'	'GREENSBURG - SSTARTP3 115.00 115KV CKT 1	120.7	129.5	0.03807	111.0244	'MINGO - RED WILLOW 345KV CKT 1'
13G	03ALL	'TO->FROM'	'GREENSBURG - SSTARTP3 115.00 115KV CKT 1	120.7	129.5	0.03965	111.0244	'MINGO - RED WILLOW 345KV CKT 1'
13G	03ALL	'TO->FROM'	'GREENSBURG - SSTARTP3 115.00 115KV CKT 1	120.7	129.5	0.03965	111.0244	'MINGO - RED WILLOW 345KV CKT 1'
13G	03ALL	'TO->FROM'	'GREENSBURG - SSTARTP3 115.00 115KV CKT 1	120.7	129.5	0.03848	111.0244	'MINGO - RED WILLOW 345KV CKT 1'
13G	03ALL	'TO->FROM'	'GREENSBURG - SSTARTP3 115.00 115KV CKT 1	120.7	129.5	0.04102	111.0244	'MINGO - RED WILLOW 345KV CKT 1'
13G	03ALL	'TO->FROM'	'GREENSBURG - SSTARTP3 115.00 115KV CKT 1	120.7	129.5	0.03823	111.0244	'MINGO - RED WILLOW 345KV CKT 1'
13G	03ALL	'FROM->TO'	'HARPER - MILAN TAP 138KV CKT 1'	95.6	95.6	0.03745	153.1462	'MINGO - RED WILLOW 345KV CKT 1'
13G	03ALL	'FROM->TO'	'HARPER - MILAN TAP 138KV CKT 1'	95.6	95.6	0.06629	153.1462	'MINGO - RED WILLOW 345KV CKT 1'
13G	03ALL	'FROM->TO'	'HARPER - MILAN TAP 138KV CKT 1'	95.6	95.6	0.11276	153.1462	'MINGO - RED WILLOW 345KV CKT 1'
13G	03ALL	'FROM->TO'	'HARPER - MILAN TAP 138KV CKT 1'	95.6	95.6	0.05257	153.1462	'MINGO - RED WILLOW 345KV CKT 1'
13G	03ALL	'FROM->TO'	'HARPER - MILAN TAP 138KV CKT 1'	95.6	95.6	0.05257	153.1462	'MINGO - RED WILLOW 345KV CKT 1'
13G	03ALL	'FROM->TO'	'HARPER - MILAN TAP 138KV CKT 1'	95.6	95.6	0.21374	153.1462	'MINGO - RED WILLOW 345KV CKT 1'
13G	03ALL	'FROM->TO'	'HARPER - MILAN TAP 138KV CKT 1'	95.6	95.6	0.04623	153.1462	'MINGO - RED WILLOW 345KV CKT 1'
13G	03ALL	'FROM->TO'	'HARPER - MILAN TAP 138KV CKT 1'	95.6	95.6	0.0453	153.1462	'MINGO - RED WILLOW 345KV CKT 1'
13G	03ALL	'FROM->TO'	'HARPER - MILAN TAP 138KV CKT 1'	95.6	95.6	0.0453	153.1462	'MINGO - RED WILLOW 345KV CKT 1'
13G	03ALL	'FROM->TO'	'HARPER - MILAN TAP 138KV CKT 1'	95.6	95.6	0.52855	153.1462	'MINGO - RED WILLOW 345KV CKT 1'
13G	03ALL	'FROM->TO'	'HARPER - MILAN TAP 138KV CKT 1'	95.6	95.6	0.04603	153.1462	'MINGO - RED WILLOW 345KV CKT 1'
13G	03ALL	'FROM->TO'	'HARPER - MILAN TAP 138KV CKT 1'	95.6	95.6	0.04703	153.1462	'MINGO - RED WILLOW 345KV CKT 1'
13G	03ALL	'FROM->TO'	'HARPER - MILAN TAP 138KV CKT 1'	95.6	95.6	0.0435	153.1462	'MINGO - RED WILLOW 345KV CKT 1'
13G	03ALL	'TO->FROM'	'MEDICINE LODGE - SUN CITY 115KV CKT 1'	120.7	129.5	0.18151	100.6114	'MINGO - RED WILLOW 345KV CKT 1'
13G	03ALL	'TO->FROM'	'MEDICINE LODGE - SUN CITY 115KV CKT 1'	120.7	129.5	0.0486	100.6114	'MINGO - RED WILLOW 345KV CKT 1'
13G	03ALL	'TO->FROM'	'MEDICINE LODGE - SUN CITY 115KV CKT 1'	120.7	129.5	0.0486	100.6114	'MINGO - RED WILLOW 345KV CKT 1'
13G	03ALL	'TO->FROM'	'MEDICINE LODGE - SUN CITY 115KV CKT 1'	120.7	129.5	0.40217	100.6114	'MINGO - RED WILLOW 345KV CKT 1'
13G	03ALL	'TO->FROM'	'MEDICINE LODGE - SUN CITY 115KV CKT 1'	120.7	129.5	0.03807	100.6114	'MINGO - RED WILLOW 345KV CKT 1'
13G	03ALL	'TO->FROM'	'MEDICINE LODGE - SUN CITY 115KV CKT 1'	120.7	129.5	0.03965	100.6114	'MINGO - RED WILLOW 345KV CKT 1'
13G	03ALL	'TO->FROM'	'MEDICINE LODGE - SUN CITY 115KV CKT 1'	120.7	129.5	0.03965	100.6114	'MINGO - RED WILLOW 345KV CKT 1'
13G	03ALL	'TO->FROM'	'MEDICINE LODGE - SUN CITY 115KV CKT 1'	120.7	129.5	0.03848	100.6114	'MINGO - RED WILLOW 345KV CKT 1'
13G	03ALL	'TO->FROM'	'MEDICINE LODGE - SUN CITY 115KV CKT 1'	120.7	129.5	0.04102	100.6114	'MINGO - RED WILLOW 345KV CKT 1'
13G	03ALL	'TO->FROM'	'MEDICINE LODGE - SUN CITY 115KV CKT 1'	120.7	129.5	0.03823	100.6114	'MINGO - RED WILLOW 345KV CKT 1'
13G	03ALL	'TO->FROM'	'BARBER 3 115.00 - MEDICINE LODGE 115KV CKT 1'	79.7	79.7	0.11914	100	'MINGO - RED WILLOW 345KV CKT 1'
13G	03ALL	'TO->FROM'	'BARBER 3 115.00 - MEDICINE LODGE 115KV CKT 1'	79.7	79.7	0.03788	100	'MINGO - RED WILLOW 345KV CKT 1'
13G	03ALL	'TO->FROM'	'BARBER 3 115.00 - MEDICINE LODGE 115KV CKT 1'	79.7	79.7	0.03788	100	'MINGO - RED WILLOW 345KV CKT 1'
13G	03ALL	'TO->FROM'	'BARBER 3 115.00 - MEDICINE LODGE 115KV CKT 1'	79.7	79.7	0.25433	100	'MINGO - RED WILLOW 345KV CKT 1'
13G	03ALL	'TO->FROM'	'BARBER 3 115.00 - MEDICINE LODGE 115KV CKT 1'	79.7	79.7	0.03102	100	'MINGO - RED WILLOW 345KV CKT 1'
13G	03ALL	'TO->FROM'	'BARBER 3 115.00 - MEDICINE LODGE 115KV CKT 1'	79.7	79.7	0.03155	100	'MINGO - RED WILLOW 345KV CKT 1'
13G	03ALL	'TO->FROM'	'BARBER 3 115.00 - MEDICINE LODGE 115KV CKT 1'	79.7	79.7	0.03155	100	'MINGO - RED WILLOW 345KV CKT 1'
13G	03ALL	'TO->FROM'	'BARBER 3 115.00 - MEDICINE LODGE 115KV CKT 1'	79.7	79.7	0.03117	100	'MINGO - RED WILLOW 345KV CKT 1'
13G	03ALL	'TO->FROM'	'BARBER 3 115.00 - MEDICINE LODGE 115KV CKT 1'	79.7	79.7	0.03268	100	'MINGO - RED WILLOW 345KV CKT 1'
13G	03ALL	'TO->FROM'	'BARBER 3 115.00 - MEDICINE LODGE 115KV CKT 1'	79.7	79.7	0.03037	100	'MINGO - RED WILLOW 345KV CKT 1'
13G	03ALL	'FROM->TO'	'SMOKYHL6 230.00 - SUMMIT 230KV CKT 1'	319	319	0.20579	102.3001	'BUCKNER7 345.00 - SPEARVILLE 345KV CKT 1
13G	03ALL	'FROM->TO'	'SMOKYHL6 230.00 - SUMMIT 230KV CKT 1'	319	319	0.09781	102.3001	'BUCKNER7 345.00 - SPEARVILLE 345KV CKT 1

SEASON	GROUP	DIRECTION	MONITORED ELEMENT	RATE A (MVA)	RATE B (MVA)	TDF	TC%LOADING (%MVA)	CONTINGENCY NAME
13G	03ALL	'FROM->TO'	'SMOKYHL6 230.00 - SUMMIT 230KV CKT 1'	319	319	0.12484	102.3001	'BUCKNER7 345.00 - SPEARVILLE 345KV CKT 1
13G	03ALL	'FROM->TO'	'SMOKYHL6 230.00 - SUMMIT 230KV CKT 1'	319	319	0.1587	102.3001	'BUCKNER7 345.00 - SPEARVILLE 345KV CKT 1
13G	03ALL	'FROM->TO'	'SMOKYHL6 230.00 - SUMMIT 230KV CKT 1'	319	319	0.1587	102.3001	'BUCKNER7 345.00 - SPEARVILLE 345KV CKT 1
13G	03ALL	'FROM->TO'	'SMOKYHL6 230.00 - SUMMIT 230KV CKT 1'	319	319	0.09638	102.3001	'BUCKNER7 345.00 - SPEARVILLE 345KV CKT 1
13G	03ALL	'FROM->TO'	'SMOKYHL6 230.00 - SUMMIT 230KV CKT 1'	319	319	0.07032	102.3001	'BUCKNER7 345.00 - SPEARVILLE 345KV CKT 1
13G	03ALL	'FROM->TO'	'SMOKYHL6 230.00 - SUMMIT 230KV CKT 1'	319	319	0.06357	102.3001	'BUCKNER7 345.00 - SPEARVILLE 345KV CKT 1
13G	03ALL	'FROM->TO'	'SMOKYHL6 230.00 - SUMMIT 230KV CKT 1'	319	319	0.06357	102.3001	'BUCKNER7 345.00 - SPEARVILLE 345KV CKT 1
13G	03ALL	'FROM->TO'	'SMOKYHL6 230.00 - SUMMIT 230KV CKT 1'	319	319	0.64015	102.3001	'BUCKNER7 345.00 - SPEARVILLE 345KV CKT 1
13G	03ALL	'FROM->TO'	'SMOKYHL6 230.00 - SUMMIT 230KV CKT 1'	319	319	0.03114	102.3001	'BUCKNER7 345.00 - SPEARVILLE 345KV CKT 1
13G	03ALL	'FROM->TO'	'SMOKYHL6 230.00 - SUMMIT 230KV CKT 1'	319	319	0.07129	102.3001	'BUCKNER7 345.00 - SPEARVILLE 345KV CKT 1
13G	03ALL	'FROM->TO'	'SMOKYHL6 230.00 - SUMMIT 230KV CKT 1'	319	319	0.16777	102.3001	'BUCKNER7 345.00 - SPEARVILLE 345KV CKT 1
13G	03ALL	'FROM->TO'	'SMOKYHL6 230.00 - SUMMIT 230KV CKT 1'	319	319	0.06347	102.3001	'BUCKNER7 345.00 - SPEARVILLE 345KV CKT 1
13G	03ALL	'FROM->TO'	'SMOKYHL6 230.00 - SUMMIT 230KV CKT 1'	319	319	0.17927	113.0393	'JEFFREY ENERGY CENTER - SUMMIT 345KV CKT 1'
13G	03ALL	'FROM->TO'	'SMOKYHL6 230.00 - SUMMIT 230KV CKT 1'	319	319	0.0835	113.0393	'JEFFREY ENERGY CENTER - SUMMIT 345KV CKT 1'
13G	03ALL	'FROM->TO'	'SMOKYHL6 230.00 - SUMMIT 230KV CKT 1'	319	319	0.09802	113.0393	'JEFFREY ENERGY CENTER - SUMMIT 345KV CKT 1'
13G	03ALL	'FROM->TO'	'SMOKYHL6 230.00 - SUMMIT 230KV CKT 1'	319	319	0.11704	113.0393	'JEFFREY ENERGY CENTER - SUMMIT 345KV CKT 1'
13G	03ALL	'FROM->TO'	'SMOKYHL6 230.00 - SUMMIT 230KV CKT 1'	319	319	0.11704	113.0393	'JEFFREY ENERGY CENTER - SUMMIT 345KV CKT 1'
13G	03ALL	'FROM->TO'	'SMOKYHL6 230.00 - SUMMIT 230KV CKT 1'	319	319	0.07241	113.0393	'JEFFREY ENERGY CENTER - SUMMIT 345KV CKT 1'
13G	03ALL	'FROM->TO'	'SMOKYHL6 230.00 - SUMMIT 230KV CKT 1'	319	319	0.09593	113.0393	'JEFFREY ENERGY CENTER - SUMMIT 345KV CKT 1'
13G	03ALL	'FROM->TO'	'SMOKYHL6 230.00 - SUMMIT 230KV CKT 1'	319	319	0.1106	113.0393	'JEFFREY ENERGY CENTER - SUMMIT 345KV CKT 1'
13G	03ALL	'FROM->TO'	'SMOKYHL6 230.00 - SUMMIT 230KV CKT 1'	319	319	0.1106	113.0393	'JEFFREY ENERGY CENTER - SUMMIT 345KV CKT 1'
13G	03ALL	'FROM->TO'	'SMOKYHL6 230.00 - SUMMIT 230KV CKT 1'	319	319	0.61429	113.0393	'JEFFREY ENERGY CENTER - SUMMIT 345KV CKT 1'
13G	03ALL	'FROM->TO'	'SMOKYHL6 230.00 - SUMMIT 230KV CKT 1'	319	319	0.09602	113.0393	'JEFFREY ENERGY CENTER - SUMMIT 345KV CKT 1'
13G	03ALL	'FROM->TO'	'SMOKYHL6 230.00 - SUMMIT 230KV CKT 1'	319	319	0.12248	113.0393	'JEFFREY ENERGY CENTER - SUMMIT 345KV CKT 1'
13G	03ALL	'FROM->TO'	'SMOKYHL6 230.00 - SUMMIT 230KV CKT 1'	319	319	0.09856	113.0393	'JEFFREY ENERGY CENTER - SUMMIT 345KV CKT 1'
13G	03ALL	'FROM->TO'	'SMOKYHL6 230.00 - SUMMIT 230KV CKT 1'	319	319	0.18465	102.7395	'EMPORIA ENERGY CENTER - MORRIS COUNTY 345KV CKT 1'
13G	03ALL	'FROM->TO'	'SMOKYHL6 230.00 - SUMMIT 230KV CKT 1'	319	319	0.0891	102.7395	'EMPORIA ENERGY CENTER - MORRIS COUNTY 345KV CKT 1'
13G	03ALL	'FROM->TO'	'SMOKYHL6 230.00 - SUMMIT 230KV CKT 1'	319	319	0.10274	102.7395	'EMPORIA ENERGY CENTER - MORRIS COUNTY 345KV CKT 1'
13G	03ALL	'FROM->TO'	'SMOKYHL6 230.00 - SUMMIT 230KV CKT 1'	319	319	0.12161	102.7395	'EMPORIA ENERGY CENTER - MORRIS COUNTY 345KV CKT 1'
13G	03ALL	'FROM->TO'	'SMOKYHL6 230.00 - SUMMIT 230KV CKT 1'	319	319	0.12161	102.7395	'EMPORIA ENERGY CENTER - MORRIS COUNTY 345KV CKT 1'
13G	03ALL	'FROM->TO'	'SMOKYHL6 230.00 - SUMMIT 230KV CKT 1'	319	319	0.07767	102.7395	'EMPORIA ENERGY CENTER - MORRIS COUNTY 345KV CKT 1'
13G	03ALL	'FROM->TO'	'SMOKYHL6 230.00 - SUMMIT 230KV CKT 1'	319	319	0.09939	102.7395	'EMPORIA ENERGY CENTER - MORRIS COUNTY 345KV CKT 1'
13G	03ALL	'FROM->TO'	'SMOKYHL6 230.00 - SUMMIT 230KV CKT 1'	319	319	0.11452	102.7395	'EMPORIA ENERGY CENTER - MORRIS COUNTY 345KV CKT 1'
13G	03ALL	'FROM->TO'	'SMOKYHL6 230.00 - SUMMIT 230KV CKT 1'	319	319	0.11452	102.7395	'EMPORIA ENERGY CENTER - MORRIS COUNTY 345KV CKT 1'
13G	03ALL	'FROM->TO'	'SMOKYHL6 230.00 - SUMMIT 230KV CKT 1'	319	319	0.62481	102.7395	'EMPORIA ENERGY CENTER - MORRIS COUNTY 345KV CKT 1'
13G	03ALL	'FROM->TO'	'SMOKYHL6 230.00 - SUMMIT 230KV CKT 1'	319	319	0.09938	102.7395	'EMPORIA ENERGY CENTER - MORRIS COUNTY 345KV CKT 1'
13G	03ALL	'FROM->TO'	'SMOKYHL6 230.00 - SUMMIT 230KV CKT 1'	319	319	0.12678	102.7395	'EMPORIA ENERGY CENTER - MORRIS COUNTY 345KV CKT 1'
13G	03ALL	'FROM->TO'	'SMOKYHL6 230.00 - SUMMIT 230KV CKT 1'	319	319	0.10211	102.7395	'EMPORIA ENERGY CENTER - MORRIS COUNTY 345KV CKT 1'
13G	03ALL	'TO->FROM'	'CLEARWATER - MILAN TAP 138KV CKT 1'	110	110	0.03589	126.5288	'EMPORIA ENERGY CENTER - WICHITA 345KV CKT 1'
13G	03ALL	'TO->FROM'	'CLEARWATER - MILAN TAP 138KV CKT 1'	110	110	0.06226	126.5288	'EMPORIA ENERGY CENTER - WICHITA 345KV CKT 1'
13G	03ALL	'TO->FROM'	'CLEARWATER - MILAN TAP 138KV CKT 1'	110	110	0.10853	126.5288	'EMPORIA ENERGY CENTER - WICHITA 345KV CKT 1'
13G	03ALL	'TO->FROM'	'CLEARWATER - MILAN TAP 138KV CKT 1'	110	110	0.04863	126.5288	'EMPORIA ENERGY CENTER - WICHITA 345KV CKT 1'
13G	03ALL	'TO->FROM'	'CLEARWATER - MILAN TAP 138KV CKT 1'	110	110	0.04863	126.5288	'EMPORIA ENERGY CENTER - WICHITA 345KV CKT 1'
13G	03ALL	'TO->FROM'	'CLEARWATER - MILAN TAP 138KV CKT 1'	110	110	0.21012	126.5288	'EMPORIA ENERGY CENTER - WICHITA 345KV CKT 1'
13G	03ALL	'TO->FROM'	'CLEARWATER - MILAN TAP 138KV CKT 1'	110	110	0.03775	126.5288	'EMPORIA ENERGY CENTER - WICHITA 345KV CKT 1'
13G	03ALL	'TO->FROM'	'CLEARWATER - MILAN TAP 138KV CKT 1'	110	110	0.0396	126.5288	'EMPORIA ENERGY CENTER - WICHITA 345KV CKT 1'
13G	03ALL	'TO->FROM'	'CLEARWATER - MILAN TAP 138KV CKT 1'	110	110	0.0396	126.5288	'EMPORIA ENERGY CENTER - WICHITA 345KV CKT 1'
13G	03ALL	'TO->FROM'	'CLEARWATER - MILAN TAP 138KV CKT 1'	110	110	0.52617	126.5288	'EMPORIA ENERGY CENTER - WICHITA 345KV CKT 1'
13G	03ALL	'TO->FROM'	'CLEARWATER - MILAN TAP 138KV CKT 1'	110	110	0.03719	126.5288	'EMPORIA ENERGY CENTER - WICHITA 345KV CKT 1'
13G	03ALL	'TO->FROM'	'CLEARWATER - MILAN TAP 138KV CKT 1'	110	110	0.04287	126.5288	'EMPORIA ENERGY CENTER - WICHITA 345KV CKT 1'
13G	03ALL	'TO->FROM'	'CLEARWATER - MILAN TAP 138KV CKT 1'	110	110	0.03626	126.5288	'EMPORIA ENERGY CENTER - WICHITA 345KV CKT 1'
13G	03ALL	'FROM->TO'	'HARPER - MILAN TAP 138KV CKT 1'	95.6	95.6	0.03589	152.8695	'EMPORIA ENERGY CENTER - WICHITA 345KV CKT 1'
13G	03ALL	'FROM->TO'	'HARPER - MILAN TAP 138KV CKT 1'	95.6	95.6	0.06226	152.8695	'EMPORIA ENERGY CENTER - WICHITA 345KV CKT 1'
13G	03ALL	'FROM->TO'	'HARPER - MILAN TAP 138KV CKT 1'	95.6	95.6	0.10853	152.8695	'EMPORIA ENERGY CENTER - WICHITA 345KV CKT 1'
13G	03ALL	'FROM->TO'	'HARPER - MILAN TAP 138KV CKT 1'	95.6	95.6	0.04863	152.8695	'EMPORIA ENERGY CENTER - WICHITA 345KV CKT 1'
13G	03ALL	'FROM->TO'	'HARPER - MILAN TAP 138KV CKT 1'	95.6	95.6	0.04863	152.8695	'EMPORIA ENERGY CENTER - WICHITA 345KV CKT 1'
13G	03ALL	'FROM->TO'	'HARPER - MILAN TAP 138KV CKT 1'	95.6	95.6	0.21012	152.8695	'EMPORIA ENERGY CENTER - WICHITA 345KV CKT 1'
13G	03ALL	'FROM->TO'	'HARPER - MILAN TAP 138KV CKT 1'	95.6	95.6	0.03775	152.8695	'EMPORIA ENERGY CENTER - WICHITA 345KV CKT 1'
13G	03ALL	'FROM->TO'	'HARPER - MILAN TAP 138KV CKT 1'	95.6	95.6	0.0396	152.8695	'EMPORIA ENERGY CENTER - WICHITA 345KV CKT 1'
13G	03ALL	'FROM->TO'	'HARPER - MILAN TAP 138KV CKT 1'	95.6	95.6	0.0396	152.8695	'EMPORIA ENERGY CENTER - WICHITA 345KV CKT 1'
13G	03ALL	'FROM->TO'	'HARPER - MILAN TAP 138KV CKT 1'	95.6	95.6	0.52617	152.8695	'EMPORIA ENERGY CENTER - WICHITA 345KV CKT 1'
13G	03ALL	'FROM->TO'	'HARPER - MILAN TAP 138KV CKT 1'	95.6	95.6	0.03719	152.8695	'EMPORIA ENERGY CENTER - WICHITA 345KV CKT 1'
13G	03ALL	'FROM->TO'	'HARPER - MILAN TAP 138KV CKT 1'	95.6	95.6	0.04287	152.8695	'EMPORIA ENERGY CENTER - WICHITA 345KV CKT 1'
13G	03ALL	'FROM->TO'	'HARPER - MILAN TAP 138KV CKT 1'	95.6	95.6	0.03626	152.8695	'EMPORIA ENERGY CENTER - WICHITA 345KV CKT 1'

SEASON	GROUP	DIRECTION	MONITORED ELEMENT	RATE A (MVA)	RATE B (MVA)	TDF	TC%LOADING (%MVA)	CONTINGENCY NAME
13G	03ALL	'FROM->TO'	'MOUNDRIDGE (MOUND10X) 138/115/13.8KV TRANSFORMER CKT 1'	100	110	0.0306	100.4725	'EMPORIA ENERGY CENTER - WICHITA 345KV CKT 1'
13G	03ALL	'FROM->TO'	'MOUNDRIDGE (MOUND10X) 138/115/13.8KV TRANSFORMER CKT 1'	100	110	0.03281	100.4725	'EMPORIA ENERGY CENTER - WICHITA 345KV CKT 1'
13G	03ALL	'FROM->TO'	'MOUNDRIDGE (MOUND10X) 138/115/13.8KV TRANSFORMER CKT 1'	100	110	0.06373	100.4725	'EMPORIA ENERGY CENTER - WICHITA 345KV CKT 1'
13G	03ALL	'FROM->TO'	'MOUNDRIDGE (MOUND10X) 138/115/13.8KV TRANSFORMER CKT 1'	100	110	0.03647	100.4725	'EMPORIA ENERGY CENTER - WICHITA 345KV CKT 1'
13G	03ALL	'FROM->TO'	'MOUNDRIDGE (MOUND10X) 138/115/13.8KV TRANSFORMER CKT 1'	100	110	0.0306	100.1899	'EMPORIA ENERGY CENTER - WICHITA 345KV CKT 1'
13G	03ALL	'FROM->TO'	'MOUNDRIDGE (MOUND10X) 138/115/13.8KV TRANSFORMER CKT 1'	100	110	0.03281	100.1899	'EMPORIA ENERGY CENTER - WICHITA 345KV CKT 1'
13G	03ALL	'FROM->TO'	'MOUNDRIDGE (MOUND10X) 138/115/13.8KV TRANSFORMER CKT 1'	100	110	0.06373	100.1899	'EMPORIA ENERGY CENTER - WICHITA 345KV CKT 1'
13G	03ALL	'FROM->TO'	'MOUNDRIDGE (MOUND10X) 138/115/13.8KV TRANSFORMER CKT 1'	100	110	0.03647	100.1899	'EMPORIA ENERGY CENTER - WICHITA 345KV CKT 1'
13G	03ALL	'TO->FROM'	'CLEARWATER - MILAN TAP 138KV CKT 1'	110	110	0.03624	126.2624	'RENO COUNTY - SUMMIT 345KV CKT 1'
13G	03ALL	'TO->FROM'	'CLEARWATER - MILAN TAP 138KV CKT 1'	110	110	0.06242	126.2624	'RENO COUNTY - SUMMIT 345KV CKT 1'
13G	03ALL	'TO->FROM'	'CLEARWATER - MILAN TAP 138KV CKT 1'	110	110	0.10877	126.2624	'RENO COUNTY - SUMMIT 345KV CKT 1'
13G	03ALL	'TO->FROM'	'CLEARWATER - MILAN TAP 138KV CKT 1'	110	110	0.04885	126.2624	'RENO COUNTY - SUMMIT 345KV CKT 1'
13G	03ALL	'TO->FROM'	'CLEARWATER - MILAN TAP 138KV CKT 1'	110	110	0.04885	126.2624	'RENO COUNTY - SUMMIT 345KV CKT 1'
13G	03ALL	'TO->FROM'	'CLEARWATER - MILAN TAP 138KV CKT 1'	110	110	0.21042	126.2624	'RENO COUNTY - SUMMIT 345KV CKT 1'
13G	03ALL	'TO->FROM'	'CLEARWATER - MILAN TAP 138KV CKT 1'	110	110	0.03789	126.2624	'RENO COUNTY - SUMMIT 345KV CKT 1'
13G	03ALL	'TO->FROM'	'CLEARWATER - MILAN TAP 138KV CKT 1'	110	110	0.03979	126.2624	'RENO COUNTY - SUMMIT 345KV CKT 1'
13G	03ALL	'TO->FROM'	'CLEARWATER - MILAN TAP 138KV CKT 1'	110	110	0.03979	126.2624	'RENO COUNTY - SUMMIT 345KV CKT 1'
13G	03ALL	'TO->FROM'	'CLEARWATER - MILAN TAP 138KV CKT 1'	110	110	0.52671	126.2624	'RENO COUNTY - SUMMIT 345KV CKT 1'
13G	03ALL	'TO->FROM'	'CLEARWATER - MILAN TAP 138KV CKT 1'	110	110	0.03733	126.2624	'RENO COUNTY - SUMMIT 345KV CKT 1'
13G	03ALL	'TO->FROM'	'CLEARWATER - MILAN TAP 138KV CKT 1'	110	110	0.0431	126.2624	'RENO COUNTY - SUMMIT 345KV CKT 1'
13G	03ALL	'TO->FROM'	'CLEARWATER - MILAN TAP 138KV CKT 1'	110	110	0.03643	126.2624	'RENO COUNTY - SUMMIT 345KV CKT 1'
13G	03ALL	'FROM->TO'	'HARPER - MILAN TAP 138KV CKT 1'	95.6	95.6	0.03624	152.5834	'RENO COUNTY - SUMMIT 345KV CKT 1'
13G	03ALL	'FROM->TO'	'HARPER - MILAN TAP 138KV CKT 1'	95.6	95.6	0.06242	152.5834	'RENO COUNTY - SUMMIT 345KV CKT 1'
13G	03ALL	'FROM->TO'	'HARPER - MILAN TAP 138KV CKT 1'	95.6	95.6	0.10877	152.5834	'RENO COUNTY - SUMMIT 345KV CKT 1'
13G	03ALL	'FROM->TO'	'HARPER - MILAN TAP 138KV CKT 1'	95.6	95.6	0.04885	152.5834	'RENO COUNTY - SUMMIT 345KV CKT 1'
13G	03ALL	'FROM->TO'	'HARPER - MILAN TAP 138KV CKT 1'	95.6	95.6	0.04885	152.5834	'RENO COUNTY - SUMMIT 345KV CKT 1'
13G	03ALL	'FROM->TO'	'HARPER - MILAN TAP 138KV CKT 1'	95.6	95.6	0.21042	152.5834	'RENO COUNTY - SUMMIT 345KV CKT 1'
13G	03ALL	'FROM->TO'	'HARPER - MILAN TAP 138KV CKT 1'	95.6	95.6	0.03789	152.5834	'RENO COUNTY - SUMMIT 345KV CKT 1'
13G	03ALL	'FROM->TO'	'HARPER - MILAN TAP 138KV CKT 1'	95.6	95.6	0.03979	152.5834	'RENO COUNTY - SUMMIT 345KV CKT 1'
13G	03ALL	'FROM->TO'	'HARPER - MILAN TAP 138KV CKT 1'	95.6	95.6	0.03979	152.5834	'RENO COUNTY - SUMMIT 345KV CKT 1'
13G	03ALL	'FROM->TO'	'HARPER - MILAN TAP 138KV CKT 1'	95.6	95.6	0.52671	152.5834	'RENO COUNTY - SUMMIT 345KV CKT 1'
13G	03ALL	'FROM->TO'	'HARPER - MILAN TAP 138KV CKT 1'	95.6	95.6	0.03733	152.5834	'RENO COUNTY - SUMMIT 345KV CKT 1'
13G	03ALL	'FROM->TO'	'HARPER - MILAN TAP 138KV CKT 1'	95.6	95.6	0.0431	152.5834	'RENO COUNTY - SUMMIT 345KV CKT 1'
13G	03ALL	'FROM->TO'	'HARPER - MILAN TAP 138KV CKT 1'	95.6	95.6	0.03643	152.5834	'RENO COUNTY - SUMMIT 345KV CKT 1'
13G	03ALL	'FROM->TO'	'CIRCLE (CIRCLE1X) 230/115/13.8KV TRANSFORMER CKT 1'	280	308	0.12801	102.3212	'RENO COUNTY - SUMMIT 345KV CKT 1'
13G	03ALL	'FROM->TO'	'CIRCLE (CIRCLE1X) 230/115/13.8KV TRANSFORMER CKT 1'	280	308	0.12189	102.3212	'RENO COUNTY - SUMMIT 345KV CKT 1'
13G	03ALL	'FROM->TO'	'CIRCLE (CIRCLE1X) 230/115/13.8KV TRANSFORMER CKT 1'	280	308	0.08458	102.3212	'RENO COUNTY - SUMMIT 345KV CKT 1'
13G	03ALL	'FROM->TO'	'CIRCLE (CIRCLE1X) 230/115/13.8KV TRANSFORMER CKT 1'	280	308	0.10965	102.3212	'RENO COUNTY - SUMMIT 345KV CKT 1'
13G	03ALL	'FROM->TO'	'CIRCLE (CIRCLE1X) 230/115/13.8KV TRANSFORMER CKT 1'	280	308	0.37738	102.3212	'RENO COUNTY - SUMMIT 345KV CKT 1'
13G	03ALL	'FROM->TO'	'CIRCLE (CIRCLE1X) 230/115/13.8KV TRANSFORMER CKT 1'	280	308	0.10965	102.3212	'RENO COUNTY - SUMMIT 345KV CKT 1'
13G	03ALL	'FROM->TO'	'CIRCLE (CIRCLE1X) 230/115/13.8KV TRANSFORMER CKT 1'	280	308	0.05126	102.3212	'RENO COUNTY - SUMMIT 345KV CKT 1'
13G	03ALL	'FROM->TO'	'CIRCLE (CIRCLE1X) 230/115/13.8KV TRANSFORMER CKT 1'	280	308	0.08451	102.3212	'RENO COUNTY - SUMMIT 345KV CKT 1'
13G	03ALL	'FROM->TO'	'CIRCLE (CIRCLE1X) 230/115/13.8KV TRANSFORMER CKT 1'	280	308	0.05332	102.3212	'RENO COUNTY - SUMMIT 345KV CKT 1'
13G	03ALL	'FROM->TO'	'CIRCLE (CIRCLE1X) 230/115/13.8KV TRANSFORMER CKT 1'	280	308	0.09274	102.3212	'RENO COUNTY - SUMMIT 345KV CKT 1'
13G	03ALL	'FROM->TO'	'CIRCLE (CIRCLE1X) 230/115/13.8KV TRANSFORMER CKT 1'	280	308	0.09274	102.3212	'RENO COUNTY - SUMMIT 345KV CKT 1'
13G	03ALL	'FROM->TO'	'CIRCLE (CIRCLE1X) 230/115/13.8KV TRANSFORMER CKT 1'	280	308	0.1283	102.3212	'RENO COUNTY - SUMMIT 345KV CKT 1'
13G	03ALL	'FROM->TO'	'CIRCLE (CIRCLE1X) 230/115/13.8KV TRANSFORMER CKT 1'	280	308	0.0836	102.3212	'RENO COUNTY - SUMMIT 345KV CKT 1'
13G	03ALL	'FROM->TO'	'CIRCLE (CIRCLE1X) 230/115/13.8KV TRANSFORMER CKT 1'	280	308	0.10267	102.3212	'RENO COUNTY - SUMMIT 345KV CKT 1'
13G	03ALL	'FROM->TO'	'CIRCLE (CIRCLE1X) 230/115/13.8KV TRANSFORMER CKT 1'	280	308	0.08266	102.3212	'RENO COUNTY - SUMMIT 345KV CKT 1'
13G	03ALL	'FROM->TO'	'CIRCLE (CIRCLE1X) 230/115/13.8KV TRANSFORMER CKT 1'	280	308	0.12801	104.2066	'RENO COUNTY - SUMMIT 345KV CKT 1'
13G	03ALL	'FROM->TO'	'CIRCLE (CIRCLE1X) 230/115/13.8KV TRANSFORMER CKT 1'	280	308	0.12189	104.2066	'RENO COUNTY - SUMMIT 345KV CKT 1'
13G	03ALL	'FROM->TO'	'CIRCLE (CIRCLE1X) 230/115/13.8KV TRANSFORMER CKT 1'	280	308	0.08458	104.2066	'RENO COUNTY - SUMMIT 345KV CKT 1'
13G	03ALL	'FROM->TO'	'CIRCLE (CIRCLE1X) 230/115/13.8KV TRANSFORMER CKT 1'	280	308	0.10965	104.2066	'RENO COUNTY - SUMMIT 345KV CKT 1'
13G	03ALL	'FROM->TO'	'CIRCLE (CIRCLE1X) 230/115/13.8KV TRANSFORMER CKT 1'	280	308	0.37738	104.2066	'RENO COUNTY - SUMMIT 345KV CKT 1'
13G	03ALL	'FROM->TO'	'CIRCLE (CIRCLE1X) 230/115/13.8KV TRANSFORMER CKT 1'	280	308	0.10965	104.2066	'RENO COUNTY - SUMMIT 345KV CKT 1'
13G	03ALL	'FROM->TO'	'CIRCLE (CIRCLE1X) 230/115/13.8KV TRANSFORMER CKT 1'	280	308	0.05126	104.2066	'RENO COUNTY - SUMMIT 345KV CKT 1'
13G	03ALL	'FROM->TO'	'CIRCLE (CIRCLE1X) 230/115/13.8KV TRANSFORMER CKT 1'	280	308	0.08451	104.2066	'RENO COUNTY - SUMMIT 345KV CKT 1'
13G	03ALL	'FROM->TO'	'CIRCLE (CIRCLE1X) 230/115/13.8KV TRANSFORMER CKT 1'	280	308	0.05332	104.2066	'RENO COUNTY - SUMMIT 345KV CKT 1'
13G	03ALL	'FROM->TO'	'CIRCLE (CIRCLE1X) 230/115/13.8KV TRANSFORMER CKT 1'	280	308	0.09274	104.2066	'RENO COUNTY - SUMMIT 345KV CKT 1'
13G	03ALL	'FROM->TO'	'CIRCLE (CIRCLE1X) 230/115/13.8KV TRANSFORMER CKT 1'	280	308	0.09274	104.2066	'RENO COUNTY - SUMMIT 345KV CKT 1'
13G	03ALL	'FROM->TO'	'CIRCLE (CIRCLE1X) 230/115/13.8KV TRANSFORMER CKT 1'	280	308	0.1283	104.2066	'RENO COUNTY - SUMMIT 345KV CKT 1'
13G	03ALL	'FROM->TO'	'CIRCLE (CIRCLE1X) 230/115/13.8KV TRANSFORMER CKT 1'	280	308	0.0836	104.2066	'RENO COUNTY - SUMMIT 345KV CKT 1'
13G	03ALL	'FROM->TO'	'CIRCLE (CIRCLE1X) 230/115/13.8KV TRANSFORMER CKT 1'	280	308	0.10267	104.2066	'RENO COUNTY - SUMMIT 345KV CKT 1'
13G	03ALL	'FROM->TO'	'CIRCLE (CIRCLE1X) 230/115/13.8KV TRANSFORMER CKT 1'	280	308	0.08266	104.2066	'RENO COUNTY - SUMMIT 345KV CKT 1'

SEASON	GROUP	DIRECTION	MONITORED ELEMENT	RATE A (MVA)	RATE B (MVA)	TDF	TC%LOADING (%MVA)	CONTINGENCY NAME
13G	03ALL	'TO->FROM'	'CLEARWATER - MILAN TAP 138KV CKT 1'	110	110	0.04369	138.1589	'RENO COUNTY - WICHITA 345KV CKT 1'
13G	03ALL	'TO->FROM'	'CLEARWATER - MILAN TAP 138KV CKT 1'	110	110	0.07066	138.1589	'RENO COUNTY - WICHITA 345KV CKT 1'
13G	03ALL	'TO->FROM'	'CLEARWATER - MILAN TAP 138KV CKT 1'	110	110	0.11474	138.1589	'RENO COUNTY - WICHITA 345KV CKT 1'
13G	03ALL	'TO->FROM'	'CLEARWATER - MILAN TAP 138KV CKT 1'	110	110	0.05529	138.1589	'RENO COUNTY - WICHITA 345KV CKT 1'
13G	03ALL	'TO->FROM'	'CLEARWATER - MILAN TAP 138KV CKT 1'	110	110	0.03144	138.1589	'RENO COUNTY - WICHITA 345KV CKT 1'
13G	03ALL	'TO->FROM'	'CLEARWATER - MILAN TAP 138KV CKT 1'	110	110	0.05529	138.1589	'RENO COUNTY - WICHITA 345KV CKT 1'
13G	03ALL	'TO->FROM'	'CLEARWATER - MILAN TAP 138KV CKT 1'	110	110	0.21603	138.1589	'RENO COUNTY - WICHITA 345KV CKT 1'
13G	03ALL	'TO->FROM'	'CLEARWATER - MILAN TAP 138KV CKT 1'	110	110	0.04304	138.1589	'RENO COUNTY - WICHITA 345KV CKT 1'
13G	03ALL	'TO->FROM'	'CLEARWATER - MILAN TAP 138KV CKT 1'	110	110	0.04532	138.1589	'RENO COUNTY - WICHITA 345KV CKT 1'
13G	03ALL	'TO->FROM'	'CLEARWATER - MILAN TAP 138KV CKT 1'	110	110	0.04532	138.1589	'RENO COUNTY - WICHITA 345KV CKT 1'
13G	03ALL	'TO->FROM'	'CLEARWATER - MILAN TAP 138KV CKT 1'	110	110	0.52951	138.1589	'RENO COUNTY - WICHITA 345KV CKT 1'
13G	03ALL	'TO->FROM'	'CLEARWATER - MILAN TAP 138KV CKT 1'	110	110	0.04242	138.1589	'RENO COUNTY - WICHITA 345KV CKT 1'
13G	03ALL	'TO->FROM'	'CLEARWATER - MILAN TAP 138KV CKT 1'	110	110	0.04918	138.1589	'RENO COUNTY - WICHITA 345KV CKT 1'
13G	03ALL	'TO->FROM'	'CLEARWATER - MILAN TAP 138KV CKT 1'	110	110	0.04138	138.1589	'RENO COUNTY - WICHITA 345KV CKT 1'
13G	03ALL	'FROM->TO'	'HARPER - MILAN TAP 138KV CKT 1'	95.6	95.6	0.04369	166.2388	'RENO COUNTY - WICHITA 345KV CKT 1'
13G	03ALL	'FROM->TO'	'HARPER - MILAN TAP 138KV CKT 1'	95.6	95.6	0.07066	166.2388	'RENO COUNTY - WICHITA 345KV CKT 1'
13G	03ALL	'FROM->TO'	'HARPER - MILAN TAP 138KV CKT 1'	95.6	95.6	0.11474	166.2388	'RENO COUNTY - WICHITA 345KV CKT 1'
13G	03ALL	'FROM->TO'	'HARPER - MILAN TAP 138KV CKT 1'	95.6	95.6	0.05529	166.2388	'RENO COUNTY - WICHITA 345KV CKT 1'
13G	03ALL	'FROM->TO'	'HARPER - MILAN TAP 138KV CKT 1'	95.6	95.6	0.03144	166.2388	'RENO COUNTY - WICHITA 345KV CKT 1'
13G	03ALL	'FROM->TO'	'HARPER - MILAN TAP 138KV CKT 1'	95.6	95.6	0.05529	166.2388	'RENO COUNTY - WICHITA 345KV CKT 1'
13G	03ALL	'FROM->TO'	'HARPER - MILAN TAP 138KV CKT 1'	95.6	95.6	0.21603	166.2388	'RENO COUNTY - WICHITA 345KV CKT 1'
13G	03ALL	'FROM->TO'	'HARPER - MILAN TAP 138KV CKT 1'	95.6	95.6	0.04304	166.2388	'RENO COUNTY - WICHITA 345KV CKT 1'
13G	03ALL	'FROM->TO'	'HARPER - MILAN TAP 138KV CKT 1'	95.6	95.6	0.04532	166.2388	'RENO COUNTY - WICHITA 345KV CKT 1'
13G	03ALL	'FROM->TO'	'HARPER - MILAN TAP 138KV CKT 1'	95.6	95.6	0.04532	166.2388	'RENO COUNTY - WICHITA 345KV CKT 1'
13G	03ALL	'FROM->TO'	'HARPER - MILAN TAP 138KV CKT 1'	95.6	95.6	0.52951	166.2388	'RENO COUNTY - WICHITA 345KV CKT 1'
13G	03ALL	'FROM->TO'	'HARPER - MILAN TAP 138KV CKT 1'	95.6	95.6	0.04242	166.2388	'RENO COUNTY - WICHITA 345KV CKT 1'
13G	03ALL	'FROM->TO'	'HARPER - MILAN TAP 138KV CKT 1'	95.6	95.6	0.04918	166.2388	'RENO COUNTY - WICHITA 345KV CKT 1'
13G	03ALL	'FROM->TO'	'HARPER - MILAN TAP 138KV CKT 1'	95.6	95.6	0.04138	166.2388	'RENO COUNTY - WICHITA 345KV CKT 1'
13G	03ALL	'TO->FROM'	'BARBER 3 115.00 - MEDICINE LODGE 115KV CKT 1'	79.7	79.7	0.1181	101.1339	'RENO COUNTY - WICHITA 345KV CKT 1'
13G	03ALL	'TO->FROM'	'BARBER 3 115.00 - MEDICINE LODGE 115KV CKT 1'	79.7	79.7	0.03712	101.1339	'RENO COUNTY - WICHITA 345KV CKT 1'
13G	03ALL	'TO->FROM'	'BARBER 3 115.00 - MEDICINE LODGE 115KV CKT 1'	79.7	79.7	0.03712	101.1339	'RENO COUNTY - WICHITA 345KV CKT 1'
13G	03ALL	'TO->FROM'	'BARBER 3 115.00 - MEDICINE LODGE 115KV CKT 1'	79.7	79.7	0.25376	101.1339	'RENO COUNTY - WICHITA 345KV CKT 1'
13G	03ALL	'TO->FROM'	'BARBER 3 115.00 - MEDICINE LODGE 115KV CKT 1'	79.7	79.7	0.03164	101.1339	'RENO COUNTY - WICHITA 345KV CKT 1'
13G	03ALL	'FROM->TO'	'MOUNDRIDGE (MOUND10X) 138/115/13.8KV TRANSFORMER CKT 1'	100	110	0.06703	165.4553	'RENO COUNTY - WICHITA 345KV CKT 1'
13G	03ALL	'FROM->TO'	'MOUNDRIDGE (MOUND10X) 138/115/13.8KV TRANSFORMER CKT 1'	100	110	0.07178	165.4553	'RENO COUNTY - WICHITA 345KV CKT 1'
13G	03ALL	'FROM->TO'	'MOUNDRIDGE (MOUND10X) 138/115/13.8KV TRANSFORMER CKT 1'	100	110	0.05021	165.4553	'RENO COUNTY - WICHITA 345KV CKT 1'
13G	03ALL	'FROM->TO'	'MOUNDRIDGE (MOUND10X) 138/115/13.8KV TRANSFORMER CKT 1'	100	110	0.05699	165.4553	'RENO COUNTY - WICHITA 345KV CKT 1'
13G	03ALL	'FROM->TO'	'MOUNDRIDGE (MOUND10X) 138/115/13.8KV TRANSFORMER CKT 1'	100	110	0.13671	165.4553	'RENO COUNTY - WICHITA 345KV CKT 1'
13G	03ALL	'FROM->TO'	'MOUNDRIDGE (MOUND10X) 138/115/13.8KV TRANSFORMER CKT 1'	100	110	0.05699	165.4553	'RENO COUNTY - WICHITA 345KV CKT 1'
13G	03ALL	'FROM->TO'	'MOUNDRIDGE (MOUND10X) 138/115/13.8KV TRANSFORMER CKT 1'	100	110	0.04267	165.4553	'RENO COUNTY - WICHITA 345KV CKT 1'
13G	03ALL	'FROM->TO'	'MOUNDRIDGE (MOUND10X) 138/115/13.8KV TRANSFORMER CKT 1'	100	110	0.04598	165.4553	'RENO COUNTY - WICHITA 345KV CKT 1'
13G	03ALL	'FROM->TO'	'MOUNDRIDGE (MOUND10X) 138/115/13.8KV TRANSFORMER CKT 1'	100	110	0.04739	165.4553	'RENO COUNTY - WICHITA 345KV CKT 1'
13G	03ALL	'FROM->TO'	'MOUNDRIDGE (MOUND10X) 138/115/13.8KV TRANSFORMER CKT 1'	100	110	0.04929	165.4553	'RENO COUNTY - WICHITA 345KV CKT 1'
13G	03ALL	'FROM->TO'	'MOUNDRIDGE (MOUND10X) 138/115/13.8KV TRANSFORMER CKT 1'	100	110	0.04929	165.4553	'RENO COUNTY - WICHITA 345KV CKT 1'
13G	03ALL	'FROM->TO'	'MOUNDRIDGE (MOUND10X) 138/115/13.8KV TRANSFORMER CKT 1'	100	110	0.08692	165.4553	'RENO COUNTY - WICHITA 345KV CKT 1'
13G	03ALL	'FROM->TO'	'MOUNDRIDGE (MOUND10X) 138/115/13.8KV TRANSFORMER CKT 1'	100	110	0.04561	165.4553	'RENO COUNTY - WICHITA 345KV CKT 1'
13G	03ALL	'FROM->TO'	'MOUNDRIDGE (MOUND10X) 138/115/13.8KV TRANSFORMER CKT 1'	100	110	0.05424	165.4553	'RENO COUNTY - WICHITA 345KV CKT 1'
13G	03ALL	'FROM->TO'	'MOUNDRIDGE (MOUND10X) 138/115/13.8KV TRANSFORMER CKT 1'	100	110	0.04425	165.4553	'RENO COUNTY - WICHITA 345KV CKT 1'
13G	03ALL	'FROM->TO'	'MOUNDRIDGE (MOUND10X) 138/115/13.8KV TRANSFORMER CKT 1'	100	110	0.06703	165.2269	'RENO COUNTY - WICHITA 345KV CKT 1'
13G	03ALL	'FROM->TO'	'MOUNDRIDGE (MOUND10X) 138/115/13.8KV TRANSFORMER CKT 1'	100	110	0.07178	165.2269	'RENO COUNTY - WICHITA 345KV CKT 1'
13G	03ALL	'FROM->TO'	'MOUNDRIDGE (MOUND10X) 138/115/13.8KV TRANSFORMER CKT 1'	100	110	0.05021	165.2269	'RENO COUNTY - WICHITA 345KV CKT 1'
13G	03ALL	'FROM->TO'	'MOUNDRIDGE (MOUND10X) 138/115/13.8KV TRANSFORMER CKT 1'	100	110	0.05699	165.2269	'RENO COUNTY - WICHITA 345KV CKT 1'
13G	03ALL	'FROM->TO'	'MOUNDRIDGE (MOUND10X) 138/115/13.8KV TRANSFORMER CKT 1'	100	110	0.13671	165.2269	'RENO COUNTY - WICHITA 345KV CKT 1'
13G	03ALL	'FROM->TO'	'MOUNDRIDGE (MOUND10X) 138/115/13.8KV TRANSFORMER CKT 1'	100	110	0.05699	165.2269	'RENO COUNTY - WICHITA 345KV CKT 1'
13G	03ALL	'FROM->TO'	'MOUNDRIDGE (MOUND10X) 138/115/13.8KV TRANSFORMER CKT 1'	100	110	0.04267	165.2269	'RENO COUNTY - WICHITA 345KV CKT 1'
13G	03ALL	'FROM->TO'	'MOUNDRIDGE (MOUND10X) 138/115/13.8KV TRANSFORMER CKT 1'	100	110	0.04598	165.2269	'RENO COUNTY - WICHITA 345KV CKT 1'
13G	03ALL	'FROM->TO'	'MOUNDRIDGE (MOUND10X) 138/115/13.8KV TRANSFORMER CKT 1'	100	110	0.04739	165.2269	'RENO COUNTY - WICHITA 345KV CKT 1'
13G	03ALL	'FROM->TO'	'MOUNDRIDGE (MOUND10X) 138/115/13.8KV TRANSFORMER CKT 1'	100	110	0.04929	165.2269	'RENO COUNTY - WICHITA 345KV CKT 1'
13G	03ALL	'FROM->TO'	'MOUNDRIDGE (MOUND10X) 138/115/13.8KV TRANSFORMER CKT 1'	100	110	0.04929	165.2269	'RENO COUNTY - WICHITA 345KV CKT 1'
13G	03ALL	'FROM->TO'	'MOUNDRIDGE (MOUND10X) 138/115/13.8KV TRANSFORMER CKT 1'	100	110	0.08692	165.2269	'RENO COUNTY - WICHITA 345KV CKT 1'
13G	03ALL	'FROM->TO'	'MOUNDRIDGE (MOUND10X) 138/115/13.8KV TRANSFORMER CKT 1'	100	110	0.04561	165.2269	'RENO COUNTY - WICHITA 345KV CKT 1'
13G	03ALL	'FROM->TO'	'MOUNDRIDGE (MOUND10X) 138/115/13.8KV TRANSFORMER CKT 1'	100	110	0.05424	165.2269	'RENO COUNTY - WICHITA 345KV CKT 1'
13G	03ALL	'FROM->TO'	'MOUNDRIDGE (MOUND10X) 138/115/13.8KV TRANSFORMER CKT 1'	100	110	0.04425	165.2269	'RENO COUNTY - WICHITA 345KV CKT 1'
13G	03ALL	'FROM->TO'	'SMOKYHL6 230.00 - SUMMIT 230KV CKT 1'	319	319	0.18558	109.5289	'IATAN - STRANGER CREEK 345KV CKT 1'

SEASON	GROUP	DIRECTION	MONITORED ELEMENT	RATE A (MVA)	RATE B (MVA)	TDF	TC%LOADING (%MVA)	CONTINGENCY NAME
13G	03ALL	'FROM->TO'	'SMOKYHL6 230.00 - SUMMIT 230KV CKT 1'	319	319	0.0896	109.5289	'IATAN - STRANGER CREEK 345KV CKT 1'
13G	03ALL	'FROM->TO'	'SMOKYHL6 230.00 - SUMMIT 230KV CKT 1'	319	319	0.10339	109.5289	'IATAN - STRANGER CREEK 345KV CKT 1'
13G	03ALL	'FROM->TO'	'SMOKYHL6 230.00 - SUMMIT 230KV CKT 1'	319	319	0.12254	109.5289	'IATAN - STRANGER CREEK 345KV CKT 1'
13G	03ALL	'FROM->TO'	'SMOKYHL6 230.00 - SUMMIT 230KV CKT 1'	319	319	0.12254	109.5289	'IATAN - STRANGER CREEK 345KV CKT 1'
13G	03ALL	'FROM->TO'	'SMOKYHL6 230.00 - SUMMIT 230KV CKT 1'	319	319	0.0778	109.5289	'IATAN - STRANGER CREEK 345KV CKT 1'
13G	03ALL	'FROM->TO'	'SMOKYHL6 230.00 - SUMMIT 230KV CKT 1'	319	319	0.10055	109.5289	'IATAN - STRANGER CREEK 345KV CKT 1'
13G	03ALL	'FROM->TO'	'SMOKYHL6 230.00 - SUMMIT 230KV CKT 1'	319	319	0.11557	109.5289	'IATAN - STRANGER CREEK 345KV CKT 1'
13G	03ALL	'FROM->TO'	'SMOKYHL6 230.00 - SUMMIT 230KV CKT 1'	319	319	0.11557	109.5289	'IATAN - STRANGER CREEK 345KV CKT 1'
13G	03ALL	'FROM->TO'	'SMOKYHL6 230.00 - SUMMIT 230KV CKT 1'	319	319	0.62504	109.5289	'IATAN - STRANGER CREEK 345KV CKT 1'
13G	03ALL	'FROM->TO'	'SMOKYHL6 230.00 - SUMMIT 230KV CKT 1'	319	319	0.10058	109.5289	'IATAN - STRANGER CREEK 345KV CKT 1'
13G	03ALL	'FROM->TO'	'SMOKYHL6 230.00 - SUMMIT 230KV CKT 1'	319	319	0.12781	109.5289	'IATAN - STRANGER CREEK 345KV CKT 1'
13G	03ALL	'FROM->TO'	'SMOKYHL6 230.00 - SUMMIT 230KV CKT 1'	319	319	0.10317	109.5289	'IATAN - STRANGER CREEK 345KV CKT 1'
13G	03ALL	'FROM->TO'	'SMOKYHL6 230.00 - SUMMIT 230KV CKT 1'	319	319	0.18374	101.8284	'SWISSVALE - WEST GARDNER 345KV CKT 1'
13G	03ALL	'FROM->TO'	'SMOKYHL6 230.00 - SUMMIT 230KV CKT 1'	319	319	0.08798	101.8284	'SWISSVALE - WEST GARDNER 345KV CKT 1'
13G	03ALL	'FROM->TO'	'SMOKYHL6 230.00 - SUMMIT 230KV CKT 1'	319	319	0.1018	101.8284	'SWISSVALE - WEST GARDNER 345KV CKT 1'
13G	03ALL	'FROM->TO'	'SMOKYHL6 230.00 - SUMMIT 230KV CKT 1'	319	319	0.12081	101.8284	'SWISSVALE - WEST GARDNER 345KV CKT 1'
13G	03ALL	'FROM->TO'	'SMOKYHL6 230.00 - SUMMIT 230KV CKT 1'	319	319	0.12081	101.8284	'SWISSVALE - WEST GARDNER 345KV CKT 1'
13G	03ALL	'FROM->TO'	'SMOKYHL6 230.00 - SUMMIT 230KV CKT 1'	319	319	0.07646	101.8284	'SWISSVALE - WEST GARDNER 345KV CKT 1'
13G	03ALL	'FROM->TO'	'SMOKYHL6 230.00 - SUMMIT 230KV CKT 1'	319	319	0.0988	101.8284	'SWISSVALE - WEST GARDNER 345KV CKT 1'
13G	03ALL	'FROM->TO'	'SMOKYHL6 230.00 - SUMMIT 230KV CKT 1'	319	319	0.11386	101.8284	'SWISSVALE - WEST GARDNER 345KV CKT 1'
13G	03ALL	'FROM->TO'	'SMOKYHL6 230.00 - SUMMIT 230KV CKT 1'	319	319	0.11386	101.8284	'SWISSVALE - WEST GARDNER 345KV CKT 1'
13G	03ALL	'FROM->TO'	'SMOKYHL6 230.00 - SUMMIT 230KV CKT 1'	319	319	0.62338	101.8284	'SWISSVALE - WEST GARDNER 345KV CKT 1'
13G	03ALL	'FROM->TO'	'SMOKYHL6 230.00 - SUMMIT 230KV CKT 1'	319	319	0.09881	101.8284	'SWISSVALE - WEST GARDNER 345KV CKT 1'
13G	03ALL	'FROM->TO'	'SMOKYHL6 230.00 - SUMMIT 230KV CKT 1'	319	319	0.12604	101.8284	'SWISSVALE - WEST GARDNER 345KV CKT 1'
13G	03ALL	'FROM->TO'	'SMOKYHL6 230.00 - SUMMIT 230KV CKT 1'	319	319	0.10151	101.8284	'SWISSVALE - WEST GARDNER 345KV CKT 1'
13G	03ALL	'FROM->TO'	'SMOKYHL6 230.00 - SUMMIT 230KV CKT 1'	319	319	0.18365	103.705	'BENTON - WICHITA 345KV CKT 1'
13G	03ALL	'FROM->TO'	'SMOKYHL6 230.00 - SUMMIT 230KV CKT 1'	319	319	0.08786	103.705	'BENTON - WICHITA 345KV CKT 1'
13G	03ALL	'FROM->TO'	'SMOKYHL6 230.00 - SUMMIT 230KV CKT 1'	319	319	0.10176	103.705	'BENTON - WICHITA 345KV CKT 1'
13G	03ALL	'FROM->TO'	'SMOKYHL6 230.00 - SUMMIT 230KV CKT 1'	319	319	0.12067	103.705	'BENTON - WICHITA 345KV CKT 1'
13G	03ALL	'FROM->TO'	'SMOKYHL6 230.00 - SUMMIT 230KV CKT 1'	319	319	0.12067	103.705	'BENTON - WICHITA 345KV CKT 1'
13G	03ALL	'FROM->TO'	'SMOKYHL6 230.00 - SUMMIT 230KV CKT 1'	319	319	0.07658	103.705	'BENTON - WICHITA 345KV CKT 1'
13G	03ALL	'FROM->TO'	'SMOKYHL6 230.00 - SUMMIT 230KV CKT 1'	319	319	0.09862	103.705	'BENTON - WICHITA 345KV CKT 1'
13G	03ALL	'FROM->TO'	'SMOKYHL6 230.00 - SUMMIT 230KV CKT 1'	319	319	0.1137	103.705	'BENTON - WICHITA 345KV CKT 1'
13G	03ALL	'FROM->TO'	'SMOKYHL6 230.00 - SUMMIT 230KV CKT 1'	319	319	0.1137	103.705	'BENTON - WICHITA 345KV CKT 1'
13G	03ALL	'FROM->TO'	'SMOKYHL6 230.00 - SUMMIT 230KV CKT 1'	319	319	0.62379	103.705	'BENTON - WICHITA 345KV CKT 1'
13G	03ALL	'FROM->TO'	'SMOKYHL6 230.00 - SUMMIT 230KV CKT 1'	319	319	0.09863	103.705	'BENTON - WICHITA 345KV CKT 1'
13G	03ALL	'FROM->TO'	'SMOKYHL6 230.00 - SUMMIT 230KV CKT 1'	319	319	0.12589	103.705	'BENTON - WICHITA 345KV CKT 1'
13G	03ALL	'FROM->TO'	'SMOKYHL6 230.00 - SUMMIT 230KV CKT 1'	319	319	0.10136	103.705	'BENTON - WICHITA 345KV CKT 1'
13G	03ALL	'TO->FROM'	'CLEARWATER - MILAN TAP 138KV CKT 1'	110	110	0.03561	126.2954	'ROSE HILL - WOLF CREEK 345KV CKT 1'
13G	03ALL	'TO->FROM'	'CLEARWATER - MILAN TAP 138KV CKT 1'	110	110	0.06216	126.2954	'ROSE HILL - WOLF CREEK 345KV CKT 1'
13G	03ALL	'TO->FROM'	'CLEARWATER - MILAN TAP 138KV CKT 1'	110	110	0.10848	126.2954	'ROSE HILL - WOLF CREEK 345KV CKT 1'
13G	03ALL	'TO->FROM'	'CLEARWATER - MILAN TAP 138KV CKT 1'	110	110	0.04845	126.2954	'ROSE HILL - WOLF CREEK 345KV CKT 1'
13G	03ALL	'TO->FROM'	'CLEARWATER - MILAN TAP 138KV CKT 1'	110	110	0.04845	126.2954	'ROSE HILL - WOLF CREEK 345KV CKT 1'
13G	03ALL	'TO->FROM'	'CLEARWATER - MILAN TAP 138KV CKT 1'	110	110	0.2103	126.2954	'ROSE HILL - WOLF CREEK 345KV CKT 1'
13G	03ALL	'TO->FROM'	'CLEARWATER - MILAN TAP 138KV CKT 1'	110	110	0.03755	126.2954	'ROSE HILL - WOLF CREEK 345KV CKT 1'
13G	03ALL	'TO->FROM'	'CLEARWATER - MILAN TAP 138KV CKT 1'	110	110	0.03941	126.2954	'ROSE HILL - WOLF CREEK 345KV CKT 1'
13G	03ALL	'TO->FROM'	'CLEARWATER - MILAN TAP 138KV CKT 1'	110	110	0.03941	126.2954	'ROSE HILL - WOLF CREEK 345KV CKT 1'
13G	03ALL	'TO->FROM'	'CLEARWATER - MILAN TAP 138KV CKT 1'	110	110	0.52696	126.2954	'ROSE HILL - WOLF CREEK 345KV CKT 1'
13G	03ALL	'TO->FROM'	'CLEARWATER - MILAN TAP 138KV CKT 1'	110	110	0.03698	126.2954	'ROSE HILL - WOLF CREEK 345KV CKT 1'
13G	03ALL	'TO->FROM'	'CLEARWATER - MILAN TAP 138KV CKT 1'	110	110	0.04267	126.2954	'ROSE HILL - WOLF CREEK 345KV CKT 1'
13G	03ALL	'TO->FROM'	'CLEARWATER - MILAN TAP 138KV CKT 1'	110	110	0.03609	126.2954	'ROSE HILL - WOLF CREEK 345KV CKT 1'
13G	03ALL	'FROM->TO'	'HARPER - MILAN TAP 138KV CKT 1'	95.6	95.6	0.03561	152.648	'ROSE HILL - WOLF CREEK 345KV CKT 1'
13G	03ALL	'FROM->TO'	'HARPER - MILAN TAP 138KV CKT 1'	95.6	95.6	0.06216	152.648	'ROSE HILL - WOLF CREEK 345KV CKT 1'
13G	03ALL	'FROM->TO'	'HARPER - MILAN TAP 138KV CKT 1'	95.6	95.6	0.10848	152.648	'ROSE HILL - WOLF CREEK 345KV CKT 1'
13G	03ALL	'FROM->TO'	'HARPER - MILAN TAP 138KV CKT 1'	95.6	95.6	0.04845	152.648	'ROSE HILL - WOLF CREEK 345KV CKT 1'
13G	03ALL	'FROM->TO'	'HARPER - MILAN TAP 138KV CKT 1'	95.6	95.6	0.04845	152.648	'ROSE HILL - WOLF CREEK 345KV CKT 1'
13G	03ALL	'FROM->TO'	'HARPER - MILAN TAP 138KV CKT 1'	95.6	95.6	0.2103	152.648	'ROSE HILL - WOLF CREEK 345KV CKT 1'
13G	03ALL	'FROM->TO'	'HARPER - MILAN TAP 138KV CKT 1'	95.6	95.6	0.03755	152.648	'ROSE HILL - WOLF CREEK 345KV CKT 1'
13G	03ALL	'FROM->TO'	'HARPER - MILAN TAP 138KV CKT 1'	95.6	95.6	0.03941	152.648	'ROSE HILL - WOLF CREEK 345KV CKT 1'
13G	03ALL	'FROM->TO'	'HARPER - MILAN TAP 138KV CKT 1'	95.6	95.6	0.03941	152.648	'ROSE HILL - WOLF CREEK 345KV CKT 1'
13G	03ALL	'FROM->TO'	'HARPER - MILAN TAP 138KV CKT 1'	95.6	95.6	0.52696	152.648	'ROSE HILL - WOLF CREEK 345KV CKT 1'
13G	03ALL	'FROM->TO'	'HARPER - MILAN TAP 138KV CKT 1'	95.6	95.6	0.03698	152.648	'ROSE HILL - WOLF CREEK 345KV CKT 1'
13G	03ALL	'FROM->TO'	'HARPER - MILAN TAP 138KV CKT 1'	95.6	95.6	0.04267	152.648	'ROSE HILL - WOLF CREEK 345KV CKT 1'
13G	03ALL	'FROM->TO'	'HARPER - MILAN TAP 138KV CKT 1'	95.6	95.6	0.03609	152.648	'ROSE HILL - WOLF CREEK 345KV CKT 1'

SEASON	GROUP	DIRECTION	MONITORED ELEMENT	RATE A (MVA)	RATE B (MVA)	TDF	TC%LOADING (%MVA)	CONTINGENCY NAME
13G	03ALL	'FROM->TO'	'SMOKYHL6 230.00 - SUMMIT 230KV CKT 1'	319	319	0.18293	104.1635	'VIOLA 7 345.00 - WICHITA 345KV CKT 1'
13G	03ALL	'FROM->TO'	'SMOKYHL6 230.00 - SUMMIT 230KV CKT 1'	319	319	0.08714	104.1635	'VIOLA 7 345.00 - WICHITA 345KV CKT 1'
13G	03ALL	'FROM->TO'	'SMOKYHL6 230.00 - SUMMIT 230KV CKT 1'	319	319	0.10094	104.1635	'VIOLA 7 345.00 - WICHITA 345KV CKT 1'
13G	03ALL	'FROM->TO'	'SMOKYHL6 230.00 - SUMMIT 230KV CKT 1'	319	319	0.12006	104.1635	'VIOLA 7 345.00 - WICHITA 345KV CKT 1'
13G	03ALL	'FROM->TO'	'SMOKYHL6 230.00 - SUMMIT 230KV CKT 1'	319	319	0.12006	104.1635	'VIOLA 7 345.00 - WICHITA 345KV CKT 1'
13G	03ALL	'FROM->TO'	'SMOKYHL6 230.00 - SUMMIT 230KV CKT 1'	319	319	0.07536	104.1635	'VIOLA 7 345.00 - WICHITA 345KV CKT 1'
13G	03ALL	'FROM->TO'	'SMOKYHL6 230.00 - SUMMIT 230KV CKT 1'	319	319	0.09815	104.1635	'VIOLA 7 345.00 - WICHITA 345KV CKT 1'
13G	03ALL	'FROM->TO'	'SMOKYHL6 230.00 - SUMMIT 230KV CKT 1'	319	319	0.11323	104.1635	'VIOLA 7 345.00 - WICHITA 345KV CKT 1'
13G	03ALL	'FROM->TO'	'SMOKYHL6 230.00 - SUMMIT 230KV CKT 1'	319	319	0.11323	104.1635	'VIOLA 7 345.00 - WICHITA 345KV CKT 1'
13G	03ALL	'FROM->TO'	'SMOKYHL6 230.00 - SUMMIT 230KV CKT 1'	319	319	0.62311	104.1635	'VIOLA 7 345.00 - WICHITA 345KV CKT 1'
13G	03ALL	'FROM->TO'	'SMOKYHL6 230.00 - SUMMIT 230KV CKT 1'	319	319	0.09815	104.1635	'VIOLA 7 345.00 - WICHITA 345KV CKT 1'
13G	03ALL	'FROM->TO'	'SMOKYHL6 230.00 - SUMMIT 230KV CKT 1'	319	319	0.12532	104.1635	'VIOLA 7 345.00 - WICHITA 345KV CKT 1'
13G	03ALL	'FROM->TO'	'SMOKYHL6 230.00 - SUMMIT 230KV CKT 1'	319	319	0.10099	104.1635	'VIOLA 7 345.00 - WICHITA 345KV CKT 1'
13G	03ALL	'TO->FROM'	'CLEARWATER - MILAN TAP 138KV CKT 1'	110	110	0.03552	119.3745	'LACYGNE - WOLF CREEK 345KV CKT 1'
13G	03ALL	'TO->FROM'	'CLEARWATER - MILAN TAP 138KV CKT 1'	110	110	0.06195	119.3745	'LACYGNE - WOLF CREEK 345KV CKT 1'
13G	03ALL	'TO->FROM'	'CLEARWATER - MILAN TAP 138KV CKT 1'	110	110	0.10827	119.3745	'LACYGNE - WOLF CREEK 345KV CKT 1'
13G	03ALL	'TO->FROM'	'CLEARWATER - MILAN TAP 138KV CKT 1'	110	110	0.04833	119.3745	'LACYGNE - WOLF CREEK 345KV CKT 1'
13G	03ALL	'TO->FROM'	'CLEARWATER - MILAN TAP 138KV CKT 1'	110	110	0.04833	119.3745	'LACYGNE - WOLF CREEK 345KV CKT 1'
13G	03ALL	'TO->FROM'	'CLEARWATER - MILAN TAP 138KV CKT 1'	110	110	0.20992	119.3745	'LACYGNE - WOLF CREEK 345KV CKT 1'
13G	03ALL	'TO->FROM'	'CLEARWATER - MILAN TAP 138KV CKT 1'	110	110	0.03749	119.3745	'LACYGNE - WOLF CREEK 345KV CKT 1'
13G	03ALL	'TO->FROM'	'CLEARWATER - MILAN TAP 138KV CKT 1'	110	110	0.03933	119.3745	'LACYGNE - WOLF CREEK 345KV CKT 1'
13G	03ALL	'TO->FROM'	'CLEARWATER - MILAN TAP 138KV CKT 1'	110	110	0.03933	119.3745	'LACYGNE - WOLF CREEK 345KV CKT 1'
13G	03ALL	'TO->FROM'	'CLEARWATER - MILAN TAP 138KV CKT 1'	110	110	0.52611	119.3745	'LACYGNE - WOLF CREEK 345KV CKT 1'
13G	03ALL	'TO->FROM'	'CLEARWATER - MILAN TAP 138KV CKT 1'	110	110	0.03694	119.3745	'LACYGNE - WOLF CREEK 345KV CKT 1'
13G	03ALL	'TO->FROM'	'CLEARWATER - MILAN TAP 138KV CKT 1'	110	110	0.04258	119.3745	'LACYGNE - WOLF CREEK 345KV CKT 1'
13G	03ALL	'TO->FROM'	'CLEARWATER - MILAN TAP 138KV CKT 1'	110	110	0.03601	119.3745	'LACYGNE - WOLF CREEK 345KV CKT 1'
13G	03ALL	'FROM->TO'	'HARPER - MILAN TAP 138KV CKT 1'	95.6	95.6	0.03552	144.7243	'LACYGNE - WOLF CREEK 345KV CKT 1'
13G	03ALL	'FROM->TO'	'HARPER - MILAN TAP 138KV CKT 1'	95.6	95.6	0.06195	144.7243	'LACYGNE - WOLF CREEK 345KV CKT 1'
13G	03ALL	'FROM->TO'	'HARPER - MILAN TAP 138KV CKT 1'	95.6	95.6	0.10827	144.7243	'LACYGNE - WOLF CREEK 345KV CKT 1'
13G	03ALL	'FROM->TO'	'HARPER - MILAN TAP 138KV CKT 1'	95.6	95.6	0.04833	144.7243	'LACYGNE - WOLF CREEK 345KV CKT 1'
13G	03ALL	'FROM->TO'	'HARPER - MILAN TAP 138KV CKT 1'	95.6	95.6	0.04833	144.7243	'LACYGNE - WOLF CREEK 345KV CKT 1'
13G	03ALL	'FROM->TO'	'HARPER - MILAN TAP 138KV CKT 1'	95.6	95.6	0.20992	144.7243	'LACYGNE - WOLF CREEK 345KV CKT 1'
13G	03ALL	'FROM->TO'	'HARPER - MILAN TAP 138KV CKT 1'	95.6	95.6	0.03749	144.7243	'LACYGNE - WOLF CREEK 345KV CKT 1'
13G	03ALL	'FROM->TO'	'HARPER - MILAN TAP 138KV CKT 1'	95.6	95.6	0.03933	144.7243	'LACYGNE - WOLF CREEK 345KV CKT 1'
13G	03ALL	'FROM->TO'	'HARPER - MILAN TAP 138KV CKT 1'	95.6	95.6	0.03933	144.7243	'LACYGNE - WOLF CREEK 345KV CKT 1'
13G	03ALL	'FROM->TO'	'HARPER - MILAN TAP 138KV CKT 1'	95.6	95.6	0.52611	144.7243	'LACYGNE - WOLF CREEK 345KV CKT 1'
13G	03ALL	'FROM->TO'	'HARPER - MILAN TAP 138KV CKT 1'	95.6	95.6	0.03694	144.7243	'LACYGNE - WOLF CREEK 345KV CKT 1'
13G	03ALL	'FROM->TO'	'HARPER - MILAN TAP 138KV CKT 1'	95.6	95.6	0.04258	144.7243	'LACYGNE - WOLF CREEK 345KV CKT 1'
13G	03ALL	'FROM->TO'	'HARPER - MILAN TAP 138KV CKT 1'	95.6	95.6	0.03601	144.7243	'LACYGNE - WOLF CREEK 345KV CKT 1'
13G	03ALL	'FROM->TO'	'SMOKYHL6 230.00 - SUMMIT 230KV CKT 1'	319	319	0.18549	106.5808	'GEN337910 1-ARKANSAS NUCLEAR ONE UNIT #1'
13G	03ALL	'FROM->TO'	'SMOKYHL6 230.00 - SUMMIT 230KV CKT 1'	319	319	0.08979	106.5808	'GEN337910 1-ARKANSAS NUCLEAR ONE UNIT #1'
13G	03ALL	'FROM->TO'	'SMOKYHL6 230.00 - SUMMIT 230KV CKT 1'	319	319	0.10326	106.5808	'GEN337910 1-ARKANSAS NUCLEAR ONE UNIT #1'
13G	03ALL	'FROM->TO'	'SMOKYHL6 230.00 - SUMMIT 230KV CKT 1'	319	319	0.12225	106.5808	'GEN337910 1-ARKANSAS NUCLEAR ONE UNIT #1'
13G	03ALL	'FROM->TO'	'SMOKYHL6 230.00 - SUMMIT 230KV CKT 1'	319	319	0.12225	106.5808	'GEN337910 1-ARKANSAS NUCLEAR ONE UNIT #1'
13G	03ALL	'FROM->TO'	'SMOKYHL6 230.00 - SUMMIT 230KV CKT 1'	319	319	0.07803	106.5808	'GEN337910 1-ARKANSAS NUCLEAR ONE UNIT #1'
13G	03ALL	'FROM->TO'	'SMOKYHL6 230.00 - SUMMIT 230KV CKT 1'	319	319	0.09991	106.5808	'GEN337910 1-ARKANSAS NUCLEAR ONE UNIT #1'
13G	03ALL	'FROM->TO'	'SMOKYHL6 230.00 - SUMMIT 230KV CKT 1'	319	319	0.11509	106.5808	'GEN337910 1-ARKANSAS NUCLEAR ONE UNIT #1'
13G	03ALL	'FROM->TO'	'SMOKYHL6 230.00 - SUMMIT 230KV CKT 1'	319	319	0.11509	106.5808	'GEN337910 1-ARKANSAS NUCLEAR ONE UNIT #1'
13G	03ALL	'FROM->TO'	'SMOKYHL6 230.00 - SUMMIT 230KV CKT 1'	319	319	0.62637	106.5808	'GEN337910 1-ARKANSAS NUCLEAR ONE UNIT #1'
13G	03ALL	'FROM->TO'	'SMOKYHL6 230.00 - SUMMIT 230KV CKT 1'	319	319	0.09991	106.5808	'GEN337910 1-ARKANSAS NUCLEAR ONE UNIT #1'
13G	03ALL	'FROM->TO'	'SMOKYHL6 230.00 - SUMMIT 230KV CKT 1'	319	319	0.1274	106.5808	'GEN337910 1-ARKANSAS NUCLEAR ONE UNIT #1'
13G	03ALL	'FROM->TO'	'SMOKYHL6 230.00 - SUMMIT 230KV CKT 1'	319	319	0.10261	106.5808	'GEN337910 1-ARKANSAS NUCLEAR ONE UNIT #1'
13G	03ALL	'FROM->TO'	'SMOKYHL6 230.00 - SUMMIT 230KV CKT 1'	319	319	0.18549	106.8421	'GEN337911 1-ARKANSAS NUCLEAR ONE UNIT #2'
13G	03ALL	'FROM->TO'	'SMOKYHL6 230.00 - SUMMIT 230KV CKT 1'	319	319	0.08979	106.8421	'GEN337911 1-ARKANSAS NUCLEAR ONE UNIT #2'
13G	03ALL	'FROM->TO'	'SMOKYHL6 230.00 - SUMMIT 230KV CKT 1'	319	319	0.10326	106.8421	'GEN337911 1-ARKANSAS NUCLEAR ONE UNIT #2'
13G	03ALL	'FROM->TO'	'SMOKYHL6 230.00 - SUMMIT 230KV CKT 1'	319	319	0.12225	106.8421	'GEN337911 1-ARKANSAS NUCLEAR ONE UNIT #2'
13G	03ALL	'FROM->TO'	'SMOKYHL6 230.00 - SUMMIT 230KV CKT 1'	319	319	0.12225	106.8421	'GEN337911 1-ARKANSAS NUCLEAR ONE UNIT #2'
13G	03ALL	'FROM->TO'	'SMOKYHL6 230.00 - SUMMIT 230KV CKT 1'	319	319	0.07803	106.8421	'GEN337911 1-ARKANSAS NUCLEAR ONE UNIT #2'
13G	03ALL	'FROM->TO'	'SMOKYHL6 230.00 - SUMMIT 230KV CKT 1'	319	319	0.09991	106.8421	'GEN337911 1-ARKANSAS NUCLEAR ONE UNIT #2'
13G	03ALL	'FROM->TO'	'SMOKYHL6 230.00 - SUMMIT 230KV CKT 1'	319	319	0.11509	106.8421	'GEN337911 1-ARKANSAS NUCLEAR ONE UNIT #2'
13G	03ALL	'FROM->TO'	'SMOKYHL6 230.00 - SUMMIT 230KV CKT 1'	319	319	0.11509	106.8421	'GEN337911 1-ARKANSAS NUCLEAR ONE UNIT #2'
13G	03ALL	'FROM->TO'	'SMOKYHL6 230.00 - SUMMIT 230KV CKT 1'	319	319	0.62637	106.8421	'GEN337911 1-ARKANSAS NUCLEAR ONE UNIT #2'
13G	03ALL	'FROM->TO'	'SMOKYHL6 230.00 - SUMMIT 230KV CKT 1'	319	319	0.09991	106.8421	'GEN337911 1-ARKANSAS NUCLEAR ONE UNIT #2'
13G	03ALL	'FROM->TO'	'SMOKYHL6 230.00 - SUMMIT 230KV CKT 1'	319	319	0.1274	106.8421	'GEN337911 1-ARKANSAS NUCLEAR ONE UNIT #2'

SEASON	GROUP	DIRECTION	MONITORED ELEMENT	RATE A (MVA)	RATE B (MVA)	TDF	TC%LOADING (%MVA)	CONTINGENCY NAME
13G	03ALL	'FROM->TO'	'SMOKYHL6 230.00 - SUMMIT 230KV CKT 1'	319	319	0.10261	106.8421	'GEN337911 1-ARKANSAS NUCLEAR ONE UNIT #2'
13G	03ALL	'FROM->TO'	'SMOKYHL6 230.00 - SUMMIT 230KV CKT 1'	319	319	0.18549	106.9654	'GEN509394 1-FLINT CREEK'
13G	03ALL	'FROM->TO'	'SMOKYHL6 230.00 - SUMMIT 230KV CKT 1'	319	319	0.08979	106.9654	'GEN509394 1-FLINT CREEK'
13G	03ALL	'FROM->TO'	'SMOKYHL6 230.00 - SUMMIT 230KV CKT 1'	319	319	0.10326	106.9654	'GEN509394 1-FLINT CREEK'
13G	03ALL	'FROM->TO'	'SMOKYHL6 230.00 - SUMMIT 230KV CKT 1'	319	319	0.12225	106.9654	'GEN509394 1-FLINT CREEK'
13G	03ALL	'FROM->TO'	'SMOKYHL6 230.00 - SUMMIT 230KV CKT 1'	319	319	0.12225	106.9654	'GEN509394 1-FLINT CREEK'
13G	03ALL	'FROM->TO'	'SMOKYHL6 230.00 - SUMMIT 230KV CKT 1'	319	319	0.07803	106.9654	'GEN509394 1-FLINT CREEK'
13G	03ALL	'FROM->TO'	'SMOKYHL6 230.00 - SUMMIT 230KV CKT 1'	319	319	0.09991	106.9654	'GEN509394 1-FLINT CREEK'
13G	03ALL	'FROM->TO'	'SMOKYHL6 230.00 - SUMMIT 230KV CKT 1'	319	319	0.11509	106.9654	'GEN509394 1-FLINT CREEK'
13G	03ALL	'FROM->TO'	'SMOKYHL6 230.00 - SUMMIT 230KV CKT 1'	319	319	0.11509	106.9654	'GEN509394 1-FLINT CREEK'
13G	03ALL	'FROM->TO'	'SMOKYHL6 230.00 - SUMMIT 230KV CKT 1'	319	319	0.62637	106.9654	'GEN509394 1-FLINT CREEK'
13G	03ALL	'FROM->TO'	'SMOKYHL6 230.00 - SUMMIT 230KV CKT 1'	319	319	0.09991	106.9654	'GEN509394 1-FLINT CREEK'
13G	03ALL	'FROM->TO'	'SMOKYHL6 230.00 - SUMMIT 230KV CKT 1'	319	319	0.1274	106.9654	'GEN509394 1-FLINT CREEK'
13G	03ALL	'FROM->TO'	'SMOKYHL6 230.00 - SUMMIT 230KV CKT 1'	319	319	0.10261	106.9654	'GEN509394 1-FLINT CREEK'
13G	03ALL	'FROM->TO'	'SMOKYHL6 230.00 - SUMMIT 230KV CKT 1'	319	319	0.18549	106.9335	'GEN511840 1-NORTHEASTERN STATION #3'
13G	03ALL	'FROM->TO'	'SMOKYHL6 230.00 - SUMMIT 230KV CKT 1'	319	319	0.08979	106.9335	'GEN511840 1-NORTHEASTERN STATION #3'
13G	03ALL	'FROM->TO'	'SMOKYHL6 230.00 - SUMMIT 230KV CKT 1'	319	319	0.10326	106.9335	'GEN511840 1-NORTHEASTERN STATION #3'
13G	03ALL	'FROM->TO'	'SMOKYHL6 230.00 - SUMMIT 230KV CKT 1'	319	319	0.12225	106.9335	'GEN511840 1-NORTHEASTERN STATION #3'
13G	03ALL	'FROM->TO'	'SMOKYHL6 230.00 - SUMMIT 230KV CKT 1'	319	319	0.12225	106.9335	'GEN511840 1-NORTHEASTERN STATION #3'
13G	03ALL	'FROM->TO'	'SMOKYHL6 230.00 - SUMMIT 230KV CKT 1'	319	319	0.07803	106.9335	'GEN511840 1-NORTHEASTERN STATION #3'
13G	03ALL	'FROM->TO'	'SMOKYHL6 230.00 - SUMMIT 230KV CKT 1'	319	319	0.09991	106.9335	'GEN511840 1-NORTHEASTERN STATION #3'
13G	03ALL	'FROM->TO'	'SMOKYHL6 230.00 - SUMMIT 230KV CKT 1'	319	319	0.11509	106.9335	'GEN511840 1-NORTHEASTERN STATION #3'
13G	03ALL	'FROM->TO'	'SMOKYHL6 230.00 - SUMMIT 230KV CKT 1'	319	319	0.11509	106.9335	'GEN511840 1-NORTHEASTERN STATION #3'
13G	03ALL	'FROM->TO'	'SMOKYHL6 230.00 - SUMMIT 230KV CKT 1'	319	319	0.62637	106.9335	'GEN511840 1-NORTHEASTERN STATION #3'
13G	03ALL	'FROM->TO'	'SMOKYHL6 230.00 - SUMMIT 230KV CKT 1'	319	319	0.09991	106.9335	'GEN511840 1-NORTHEASTERN STATION #3'
13G	03ALL	'FROM->TO'	'SMOKYHL6 230.00 - SUMMIT 230KV CKT 1'	319	319	0.1274	106.9335	'GEN511840 1-NORTHEASTERN STATION #3'
13G	03ALL	'FROM->TO'	'SMOKYHL6 230.00 - SUMMIT 230KV CKT 1'	319	319	0.10261	106.9335	'GEN511840 1-NORTHEASTERN STATION #3'
13G	03ALL	'FROM->TO'	'SMOKYHL6 230.00 - SUMMIT 230KV CKT 1'	319	319	0.18549	106.8987	'GEN511841 1-NORTHEASTERN STATION #4'
13G	03ALL	'FROM->TO'	'SMOKYHL6 230.00 - SUMMIT 230KV CKT 1'	319	319	0.08979	106.8987	'GEN511841 1-NORTHEASTERN STATION #4'
13G	03ALL	'FROM->TO'	'SMOKYHL6 230.00 - SUMMIT 230KV CKT 1'	319	319	0.10326	106.8987	'GEN511841 1-NORTHEASTERN STATION #4'
13G	03ALL	'FROM->TO'	'SMOKYHL6 230.00 - SUMMIT 230KV CKT 1'	319	319	0.12225	106.8987	'GEN511841 1-NORTHEASTERN STATION #4'
13G	03ALL	'FROM->TO'	'SMOKYHL6 230.00 - SUMMIT 230KV CKT 1'	319	319	0.12225	106.8987	'GEN511841 1-NORTHEASTERN STATION #4'
13G	03ALL	'FROM->TO'	'SMOKYHL6 230.00 - SUMMIT 230KV CKT 1'	319	319	0.07803	106.8987	'GEN511841 1-NORTHEASTERN STATION #4'
13G	03ALL	'FROM->TO'	'SMOKYHL6 230.00 - SUMMIT 230KV CKT 1'	319	319	0.09991	106.8987	'GEN511841 1-NORTHEASTERN STATION #4'
13G	03ALL	'FROM->TO'	'SMOKYHL6 230.00 - SUMMIT 230KV CKT 1'	319	319	0.11509	106.8987	'GEN511841 1-NORTHEASTERN STATION #4'
13G	03ALL	'FROM->TO'	'SMOKYHL6 230.00 - SUMMIT 230KV CKT 1'	319	319	0.11509	106.8987	'GEN511841 1-NORTHEASTERN STATION #4'
13G	03ALL	'FROM->TO'	'SMOKYHL6 230.00 - SUMMIT 230KV CKT 1'	319	319	0.62637	106.8987	'GEN511841 1-NORTHEASTERN STATION #4'
13G	03ALL	'FROM->TO'	'SMOKYHL6 230.00 - SUMMIT 230KV CKT 1'	319	319	0.09991	106.8987	'GEN511841 1-NORTHEASTERN STATION #4'
13G	03ALL	'FROM->TO'	'SMOKYHL6 230.00 - SUMMIT 230KV CKT 1'	319	319	0.1274	106.8987	'GEN511841 1-NORTHEASTERN STATION #4'
13G	03ALL	'FROM->TO'	'SMOKYHL6 230.00 - SUMMIT 230KV CKT 1'	319	319	0.10261	106.8987	'GEN511841 1-NORTHEASTERN STATION #4'
13G	03ALL	'FROM->TO'	'SMOKYHL6 230.00 - SUMMIT 230KV CKT 1'	319	319	0.18549	106.8859	'GEN512688 2-GRDA1 GSU2 22'
13G	03ALL	'FROM->TO'	'SMOKYHL6 230.00 - SUMMIT 230KV CKT 1'	319	319	0.08979	106.8859	'GEN512688 2-GRDA1 GSU2 22'
13G	03ALL	'FROM->TO'	'SMOKYHL6 230.00 - SUMMIT 230KV CKT 1'	319	319	0.10326	106.8859	'GEN512688 2-GRDA1 GSU2 22'
13G	03ALL	'FROM->TO'	'SMOKYHL6 230.00 - SUMMIT 230KV CKT 1'	319	319	0.12225	106.8859	'GEN512688 2-GRDA1 GSU2 22'
13G	03ALL	'FROM->TO'	'SMOKYHL6 230.00 - SUMMIT 230KV CKT 1'	319	319	0.12225	106.8859	'GEN512688 2-GRDA1 GSU2 22'
13G	03ALL	'FROM->TO'	'SMOKYHL6 230.00 - SUMMIT 230KV CKT 1'	319	319	0.07803	106.8859	'GEN512688 2-GRDA1 GSU2 22'
13G	03ALL	'FROM->TO'	'SMOKYHL6 230.00 - SUMMIT 230KV CKT 1'	319	319	0.09991	106.8859	'GEN512688 2-GRDA1 GSU2 22'
13G	03ALL	'FROM->TO'	'SMOKYHL6 230.00 - SUMMIT 230KV CKT 1'	319	319	0.11509	106.8859	'GEN512688 2-GRDA1 GSU2 22'
13G	03ALL	'FROM->TO'	'SMOKYHL6 230.00 - SUMMIT 230KV CKT 1'	319	319	0.11509	106.8859	'GEN512688 2-GRDA1 GSU2 22'
13G	03ALL	'FROM->TO'	'SMOKYHL6 230.00 - SUMMIT 230KV CKT 1'	319	319	0.62637	106.8859	'GEN512688 2-GRDA1 GSU2 22'
13G	03ALL	'FROM->TO'	'SMOKYHL6 230.00 - SUMMIT 230KV CKT 1'	319	319	0.09991	106.8859	'GEN512688 2-GRDA1 GSU2 22'
13G	03ALL	'FROM->TO'	'SMOKYHL6 230.00 - SUMMIT 230KV CKT 1'	319	319	0.1274	106.8859	'GEN512688 2-GRDA1 GSU2 22'
13G	03ALL	'FROM->TO'	'SMOKYHL6 230.00 - SUMMIT 230KV CKT 1'	319	319	0.10261	106.8859	'GEN512688 2-GRDA1 GSU2 22'
13G	03ALL	'FROM->TO'	'SMOKYHL6 230.00 - SUMMIT 230KV CKT 1'	319	319	0.18549	106.538	'GEN512689 1-GRDA1 GSU1 22'
13G	03ALL	'FROM->TO'	'SMOKYHL6 230.00 - SUMMIT 230KV CKT 1'	319	319	0.08979	106.538	'GEN512689 1-GRDA1 GSU1 22'
13G	03ALL	'FROM->TO'	'SMOKYHL6 230.00 - SUMMIT 230KV CKT 1'	319	319	0.10326	106.538	'GEN512689 1-GRDA1 GSU1 22'
13G	03ALL	'FROM->TO'	'SMOKYHL6 230.00 - SUMMIT 230KV CKT 1'	319	319	0.12225	106.538	'GEN512689 1-GRDA1 GSU1 22'
13G	03ALL	'FROM->TO'	'SMOKYHL6 230.00 - SUMMIT 230KV CKT 1'	319	319	0.12225	106.538	'GEN512689 1-GRDA1 GSU1 22'
13G	03ALL	'FROM->TO'	'SMOKYHL6 230.00 - SUMMIT 230KV CKT 1'	319	319	0.07803	106.538	'GEN512689 1-GRDA1 GSU1 22'
13G	03ALL	'FROM->TO'	'SMOKYHL6 230.00 - SUMMIT 230KV CKT 1'	319	319	0.09991	106.538	'GEN512689 1-GRDA1 GSU1 22'
13G	03ALL	'FROM->TO'	'SMOKYHL6 230.00 - SUMMIT 230KV CKT 1'	319	319	0.11509	106.538	'GEN512689 1-GRDA1 GSU1 22'
13G	03ALL	'FROM->TO'	'SMOKYHL6 230.00 - SUMMIT 230KV CKT 1'	319	319	0.11509	106.538	'GEN512689 1-GRDA1 GSU1 22'
13G	03ALL	'FROM->TO'	'SMOKYHL6 230.00 - SUMMIT 230KV CKT 1'	319	319	0.62637	106.538	'GEN512689 1-GRDA1 GSU1 22'
13G	03ALL	'FROM->TO'	'SMOKYHL6 230.00 - SUMMIT 230KV CKT 1'	319	319	0.09991	106.538	'GEN512689 1-GRDA1 GSU1 22'

SEASON	GROUP	DIRECTION	MONITORED ELEMENT	RATE A (MVA)	RATE B (MVA)	TDF	TC%LOADING (%MVA)	CONTINGENCY NAME
13G	03ALL	'FROM->TO'	'SMOKYHL6 230.00 - SUMMIT 230KV CKT 1'	319	319	0.1274	106.538	'GEN512689 1-GRDA1 GSU1 22'
13G	03ALL	'FROM->TO'	'SMOKYHL6 230.00 - SUMMIT 230KV CKT 1'	319	319	0.10261	106.538	'GEN512689 1-GRDA1 GSU1 22'
13G	03ALL	'FROM->TO'	'SMOKYHL6 230.00 - SUMMIT 230KV CKT 1'	319	319	0.18549	107.6155	'GEN514805 1-SOONER UNIT 1'
13G	03ALL	'FROM->TO'	'SMOKYHL6 230.00 - SUMMIT 230KV CKT 1'	319	319	0.08979	107.6155	'GEN514805 1-SOONER UNIT 1'
13G	03ALL	'FROM->TO'	'SMOKYHL6 230.00 - SUMMIT 230KV CKT 1'	319	319	0.10326	107.6155	'GEN514805 1-SOONER UNIT 1'
13G	03ALL	'FROM->TO'	'SMOKYHL6 230.00 - SUMMIT 230KV CKT 1'	319	319	0.12225	107.6155	'GEN514805 1-SOONER UNIT 1'
13G	03ALL	'FROM->TO'	'SMOKYHL6 230.00 - SUMMIT 230KV CKT 1'	319	319	0.12225	107.6155	'GEN514805 1-SOONER UNIT 1'
13G	03ALL	'FROM->TO'	'SMOKYHL6 230.00 - SUMMIT 230KV CKT 1'	319	319	0.07803	107.6155	'GEN514805 1-SOONER UNIT 1'
13G	03ALL	'FROM->TO'	'SMOKYHL6 230.00 - SUMMIT 230KV CKT 1'	319	319	0.09991	107.6155	'GEN514805 1-SOONER UNIT 1'
13G	03ALL	'FROM->TO'	'SMOKYHL6 230.00 - SUMMIT 230KV CKT 1'	319	319	0.11509	107.6155	'GEN514805 1-SOONER UNIT 1'
13G	03ALL	'FROM->TO'	'SMOKYHL6 230.00 - SUMMIT 230KV CKT 1'	319	319	0.11509	107.6155	'GEN514805 1-SOONER UNIT 1'
13G	03ALL	'FROM->TO'	'SMOKYHL6 230.00 - SUMMIT 230KV CKT 1'	319	319	0.62637	107.6155	'GEN514805 1-SOONER UNIT 1'
13G	03ALL	'FROM->TO'	'SMOKYHL6 230.00 - SUMMIT 230KV CKT 1'	319	319	0.09991	107.6155	'GEN514805 1-SOONER UNIT 1'
13G	03ALL	'FROM->TO'	'SMOKYHL6 230.00 - SUMMIT 230KV CKT 1'	319	319	0.1274	107.6155	'GEN514805 1-SOONER UNIT 1'
13G	03ALL	'FROM->TO'	'SMOKYHL6 230.00 - SUMMIT 230KV CKT 1'	319	319	0.10261	107.6155	'GEN514805 1-SOONER UNIT 1'
13G	03ALL	'TO->FROM'	'CLEARWATER - MILAN TAP 138KV CKT 1'	110	110	0.03559	126.3949	'GEN514805 1-SOONER UNIT 1'
13G	03ALL	'TO->FROM'	'CLEARWATER - MILAN TAP 138KV CKT 1'	110	110	0.06218	126.3949	'GEN514805 1-SOONER UNIT 1'
13G	03ALL	'TO->FROM'	'CLEARWATER - MILAN TAP 138KV CKT 1'	110	110	0.10851	126.3949	'GEN514805 1-SOONER UNIT 1'
13G	03ALL	'TO->FROM'	'CLEARWATER - MILAN TAP 138KV CKT 1'	110	110	0.04844	126.3949	'GEN514805 1-SOONER UNIT 1'
13G	03ALL	'TO->FROM'	'CLEARWATER - MILAN TAP 138KV CKT 1'	110	110	0.04844	126.3949	'GEN514805 1-SOONER UNIT 1'
13G	03ALL	'TO->FROM'	'CLEARWATER - MILAN TAP 138KV CKT 1'	110	110	0.2104	126.3949	'GEN514805 1-SOONER UNIT 1'
13G	03ALL	'TO->FROM'	'CLEARWATER - MILAN TAP 138KV CKT 1'	110	110	0.03753	126.3949	'GEN514805 1-SOONER UNIT 1'
13G	03ALL	'TO->FROM'	'CLEARWATER - MILAN TAP 138KV CKT 1'	110	110	0.0394	126.3949	'GEN514805 1-SOONER UNIT 1'
13G	03ALL	'TO->FROM'	'CLEARWATER - MILAN TAP 138KV CKT 1'	110	110	0.0394	126.3949	'GEN514805 1-SOONER UNIT 1'
13G	03ALL	'TO->FROM'	'CLEARWATER - MILAN TAP 138KV CKT 1'	110	110	0.52726	126.3949	'GEN514805 1-SOONER UNIT 1'
13G	03ALL	'TO->FROM'	'CLEARWATER - MILAN TAP 138KV CKT 1'	110	110	0.03696	126.3949	'GEN514805 1-SOONER UNIT 1'
13G	03ALL	'TO->FROM'	'CLEARWATER - MILAN TAP 138KV CKT 1'	110	110	0.04265	126.3949	'GEN514805 1-SOONER UNIT 1'
13G	03ALL	'TO->FROM'	'CLEARWATER - MILAN TAP 138KV CKT 1'	110	110	0.03608	126.3949	'GEN514805 1-SOONER UNIT 1'
13G	03ALL	'FROM->TO'	'HARPER - MILAN TAP 138KV CKT 1'	95.6	95.6	0.03559	152.7541	'GEN514805 1-SOONER UNIT 1'
13G	03ALL	'FROM->TO'	'HARPER - MILAN TAP 138KV CKT 1'	95.6	95.6	0.06218	152.7541	'GEN514805 1-SOONER UNIT 1'
13G	03ALL	'FROM->TO'	'HARPER - MILAN TAP 138KV CKT 1'	95.6	95.6	0.10851	152.7541	'GEN514805 1-SOONER UNIT 1'
13G	03ALL	'FROM->TO'	'HARPER - MILAN TAP 138KV CKT 1'	95.6	95.6	0.04844	152.7541	'GEN514805 1-SOONER UNIT 1'
13G	03ALL	'FROM->TO'	'HARPER - MILAN TAP 138KV CKT 1'	95.6	95.6	0.04844	152.7541	'GEN514805 1-SOONER UNIT 1'
13G	03ALL	'FROM->TO'	'HARPER - MILAN TAP 138KV CKT 1'	95.6	95.6	0.2104	152.7541	'GEN514805 1-SOONER UNIT 1'
13G	03ALL	'FROM->TO'	'HARPER - MILAN TAP 138KV CKT 1'	95.6	95.6	0.03753	152.7541	'GEN514805 1-SOONER UNIT 1'
13G	03ALL	'FROM->TO'	'HARPER - MILAN TAP 138KV CKT 1'	95.6	95.6	0.0394	152.7541	'GEN514805 1-SOONER UNIT 1'
13G	03ALL	'FROM->TO'	'HARPER - MILAN TAP 138KV CKT 1'	95.6	95.6	0.0394	152.7541	'GEN514805 1-SOONER UNIT 1'
13G	03ALL	'FROM->TO'	'HARPER - MILAN TAP 138KV CKT 1'	95.6	95.6	0.52726	152.7541	'GEN514805 1-SOONER UNIT 1'
13G	03ALL	'FROM->TO'	'HARPER - MILAN TAP 138KV CKT 1'	95.6	95.6	0.03696	152.7541	'GEN514805 1-SOONER UNIT 1'
13G	03ALL	'FROM->TO'	'HARPER - MILAN TAP 138KV CKT 1'	95.6	95.6	0.04265	152.7541	'GEN514805 1-SOONER UNIT 1'
13G	03ALL	'FROM->TO'	'HARPER - MILAN TAP 138KV CKT 1'	95.6	95.6	0.03608	152.7541	'GEN514805 1-SOONER UNIT 1'
13G	03ALL	'FROM->TO'	'SMOKYHL6 230.00 - SUMMIT 230KV CKT 1'	319	319	0.18549	107.6506	'GEN514806 1-SOONER UNIT 2'
13G	03ALL	'FROM->TO'	'SMOKYHL6 230.00 - SUMMIT 230KV CKT 1'	319	319	0.08979	107.6506	'GEN514806 1-SOONER UNIT 2'
13G	03ALL	'FROM->TO'	'SMOKYHL6 230.00 - SUMMIT 230KV CKT 1'	319	319	0.10326	107.6506	'GEN514806 1-SOONER UNIT 2'
13G	03ALL	'FROM->TO'	'SMOKYHL6 230.00 - SUMMIT 230KV CKT 1'	319	319	0.12225	107.6506	'GEN514806 1-SOONER UNIT 2'
13G	03ALL	'FROM->TO'	'SMOKYHL6 230.00 - SUMMIT 230KV CKT 1'	319	319	0.12225	107.6506	'GEN514806 1-SOONER UNIT 2'
13G	03ALL	'FROM->TO'	'SMOKYHL6 230.00 - SUMMIT 230KV CKT 1'	319	319	0.07803	107.6506	'GEN514806 1-SOONER UNIT 2'
13G	03ALL	'FROM->TO'	'SMOKYHL6 230.00 - SUMMIT 230KV CKT 1'	319	319	0.09991	107.6506	'GEN514806 1-SOONER UNIT 2'
13G	03ALL	'FROM->TO'	'SMOKYHL6 230.00 - SUMMIT 230KV CKT 1'	319	319	0.11509	107.6506	'GEN514806 1-SOONER UNIT 2'
13G	03ALL	'FROM->TO'	'SMOKYHL6 230.00 - SUMMIT 230KV CKT 1'	319	319	0.11509	107.6506	'GEN514806 1-SOONER UNIT 2'
13G	03ALL	'FROM->TO'	'SMOKYHL6 230.00 - SUMMIT 230KV CKT 1'	319	319	0.62637	107.6506	'GEN514806 1-SOONER UNIT 2'
13G	03ALL	'FROM->TO'	'SMOKYHL6 230.00 - SUMMIT 230KV CKT 1'	319	319	0.09991	107.6506	'GEN514806 1-SOONER UNIT 2'
13G	03ALL	'FROM->TO'	'SMOKYHL6 230.00 - SUMMIT 230KV CKT 1'	319	319	0.1274	107.6506	'GEN514806 1-SOONER UNIT 2'
13G	03ALL	'FROM->TO'	'SMOKYHL6 230.00 - SUMMIT 230KV CKT 1'	319	319	0.10261	107.6506	'GEN514806 1-SOONER UNIT 2'
13G	03ALL	'TO->FROM'	'CLEARWATER - MILAN TAP 138KV CKT 1'	110	110	0.03559	126.1888	'GEN514806 1-SOONER UNIT 2'
13G	03ALL	'TO->FROM'	'CLEARWATER - MILAN TAP 138KV CKT 1'	110	110	0.06218	126.1888	'GEN514806 1-SOONER UNIT 2'
13G	03ALL	'TO->FROM'	'CLEARWATER - MILAN TAP 138KV CKT 1'	110	110	0.10851	126.1888	'GEN514806 1-SOONER UNIT 2'
13G	03ALL	'TO->FROM'	'CLEARWATER - MILAN TAP 138KV CKT 1'	110	110	0.04844	126.1888	'GEN514806 1-SOONER UNIT 2'
13G	03ALL	'TO->FROM'	'CLEARWATER - MILAN TAP 138KV CKT 1'	110	110	0.04844	126.1888	'GEN514806 1-SOONER UNIT 2'
13G	03ALL	'TO->FROM'	'CLEARWATER - MILAN TAP 138KV CKT 1'	110	110	0.2104	126.1888	'GEN514806 1-SOONER UNIT 2'
13G	03ALL	'TO->FROM'	'CLEARWATER - MILAN TAP 138KV CKT 1'	110	110	0.03753	126.1888	'GEN514806 1-SOONER UNIT 2'
13G	03ALL	'TO->FROM'	'CLEARWATER - MILAN TAP 138KV CKT 1'	110	110	0.0394	126.1888	'GEN514806 1-SOONER UNIT 2'
13G	03ALL	'TO->FROM'	'CLEARWATER - MILAN TAP 138KV CKT 1'	110	110	0.0394	126.1888	'GEN514806 1-SOONER UNIT 2'
13G	03ALL	'TO->FROM'	'CLEARWATER - MILAN TAP 138KV CKT 1'	110	110	0.52726	126.1888	'GEN514806 1-SOONER UNIT 2'

SEASON	GROUP	DIRECTION	MONITORED ELEMENT	RATE A (MVA)	RATE B (MVA)	TDF	TC%LOADING (%MVA)	CONTINGENCY NAME
13G	03ALL	'TO->FROM'	'CLEARWATER - MILAN TAP 138KV CKT 1'	110	110	0.03696	126.1888	'GEN514806 1-SOONER UNIT 2'
13G	03ALL	'TO->FROM'	'CLEARWATER - MILAN TAP 138KV CKT 1'	110	110	0.04265	126.1888	'GEN514806 1-SOONER UNIT 2'
13G	03ALL	'TO->FROM'	'CLEARWATER - MILAN TAP 138KV CKT 1'	110	110	0.03608	126.1888	'GEN514806 1-SOONER UNIT 2'
13G	03ALL	'FROM->TO'	'HARPER - MILAN TAP 138KV CKT 1'	95.6	95.6	0.03559	152.5145	'GEN514806 1-SOONER UNIT 2'
13G	03ALL	'FROM->TO'	'HARPER - MILAN TAP 138KV CKT 1'	95.6	95.6	0.06218	152.5145	'GEN514806 1-SOONER UNIT 2'
13G	03ALL	'FROM->TO'	'HARPER - MILAN TAP 138KV CKT 1'	95.6	95.6	0.10851	152.5145	'GEN514806 1-SOONER UNIT 2'
13G	03ALL	'FROM->TO'	'HARPER - MILAN TAP 138KV CKT 1'	95.6	95.6	0.04844	152.5145	'GEN514806 1-SOONER UNIT 2'
13G	03ALL	'FROM->TO'	'HARPER - MILAN TAP 138KV CKT 1'	95.6	95.6	0.04844	152.5145	'GEN514806 1-SOONER UNIT 2'
13G	03ALL	'FROM->TO'	'HARPER - MILAN TAP 138KV CKT 1'	95.6	95.6	0.2104	152.5145	'GEN514806 1-SOONER UNIT 2'
13G	03ALL	'FROM->TO'	'HARPER - MILAN TAP 138KV CKT 1'	95.6	95.6	0.03753	152.5145	'GEN514806 1-SOONER UNIT 2'
13G	03ALL	'FROM->TO'	'HARPER - MILAN TAP 138KV CKT 1'	95.6	95.6	0.0394	152.5145	'GEN514806 1-SOONER UNIT 2'
13G	03ALL	'FROM->TO'	'HARPER - MILAN TAP 138KV CKT 1'	95.6	95.6	0.0394	152.5145	'GEN514806 1-SOONER UNIT 2'
13G	03ALL	'FROM->TO'	'HARPER - MILAN TAP 138KV CKT 1'	95.6	95.6	0.52726	152.5145	'GEN514806 1-SOONER UNIT 2'
13G	03ALL	'FROM->TO'	'HARPER - MILAN TAP 138KV CKT 1'	95.6	95.6	0.03696	152.5145	'GEN514806 1-SOONER UNIT 2'
13G	03ALL	'FROM->TO'	'HARPER - MILAN TAP 138KV CKT 1'	95.6	95.6	0.04265	152.5145	'GEN514806 1-SOONER UNIT 2'
13G	03ALL	'FROM->TO'	'HARPER - MILAN TAP 138KV CKT 1'	95.6	95.6	0.03608	152.5145	'GEN514806 1-SOONER UNIT 2'
13G	03ALL	'FROM->TO'	'SMOKYHL6 230.00 - SUMMIT 230KV CKT 1'	319	319	0.18549	106.5253	'GEN515223 1-MUSKOGEE 4G'
13G	03ALL	'FROM->TO'	'SMOKYHL6 230.00 - SUMMIT 230KV CKT 1'	319	319	0.08979	106.5253	'GEN515223 1-MUSKOGEE 4G'
13G	03ALL	'FROM->TO'	'SMOKYHL6 230.00 - SUMMIT 230KV CKT 1'	319	319	0.10326	106.5253	'GEN515223 1-MUSKOGEE 4G'
13G	03ALL	'FROM->TO'	'SMOKYHL6 230.00 - SUMMIT 230KV CKT 1'	319	319	0.12225	106.5253	'GEN515223 1-MUSKOGEE 4G'
13G	03ALL	'FROM->TO'	'SMOKYHL6 230.00 - SUMMIT 230KV CKT 1'	319	319	0.12225	106.5253	'GEN515223 1-MUSKOGEE 4G'
13G	03ALL	'FROM->TO'	'SMOKYHL6 230.00 - SUMMIT 230KV CKT 1'	319	319	0.07803	106.5253	'GEN515223 1-MUSKOGEE 4G'
13G	03ALL	'FROM->TO'	'SMOKYHL6 230.00 - SUMMIT 230KV CKT 1'	319	319	0.09991	106.5253	'GEN515223 1-MUSKOGEE 4G'
13G	03ALL	'FROM->TO'	'SMOKYHL6 230.00 - SUMMIT 230KV CKT 1'	319	319	0.11509	106.5253	'GEN515223 1-MUSKOGEE 4G'
13G	03ALL	'FROM->TO'	'SMOKYHL6 230.00 - SUMMIT 230KV CKT 1'	319	319	0.11509	106.5253	'GEN515223 1-MUSKOGEE 4G'
13G	03ALL	'FROM->TO'	'SMOKYHL6 230.00 - SUMMIT 230KV CKT 1'	319	319	0.62637	106.5253	'GEN515223 1-MUSKOGEE 4G'
13G	03ALL	'FROM->TO'	'SMOKYHL6 230.00 - SUMMIT 230KV CKT 1'	319	319	0.09991	106.5253	'GEN515223 1-MUSKOGEE 4G'
13G	03ALL	'FROM->TO'	'SMOKYHL6 230.00 - SUMMIT 230KV CKT 1'	319	319	0.1274	106.5253	'GEN515223 1-MUSKOGEE 4G'
13G	03ALL	'FROM->TO'	'SMOKYHL6 230.00 - SUMMIT 230KV CKT 1'	319	319	0.10261	106.5253	'GEN515223 1-MUSKOGEE 4G'
13G	03ALL	'FROM->TO'	'SMOKYHL6 230.00 - SUMMIT 230KV CKT 1'	319	319	0.18549	106.5045	'GEN515225 1-MUSKOGEE 5G'
13G	03ALL	'FROM->TO'	'SMOKYHL6 230.00 - SUMMIT 230KV CKT 1'	319	319	0.08979	106.5045	'GEN515225 1-MUSKOGEE 5G'
13G	03ALL	'FROM->TO'	'SMOKYHL6 230.00 - SUMMIT 230KV CKT 1'	319	319	0.10326	106.5045	'GEN515225 1-MUSKOGEE 5G'
13G	03ALL	'FROM->TO'	'SMOKYHL6 230.00 - SUMMIT 230KV CKT 1'	319	319	0.12225	106.5045	'GEN515225 1-MUSKOGEE 5G'
13G	03ALL	'FROM->TO'	'SMOKYHL6 230.00 - SUMMIT 230KV CKT 1'	319	319	0.12225	106.5045	'GEN515225 1-MUSKOGEE 5G'
13G	03ALL	'FROM->TO'	'SMOKYHL6 230.00 - SUMMIT 230KV CKT 1'	319	319	0.07803	106.5045	'GEN515225 1-MUSKOGEE 5G'
13G	03ALL	'FROM->TO'	'SMOKYHL6 230.00 - SUMMIT 230KV CKT 1'	319	319	0.09991	106.5045	'GEN515225 1-MUSKOGEE 5G'
13G	03ALL	'FROM->TO'	'SMOKYHL6 230.00 - SUMMIT 230KV CKT 1'	319	319	0.11509	106.5045	'GEN515225 1-MUSKOGEE 5G'
13G	03ALL	'FROM->TO'	'SMOKYHL6 230.00 - SUMMIT 230KV CKT 1'	319	319	0.11509	106.5045	'GEN515225 1-MUSKOGEE 5G'
13G	03ALL	'FROM->TO'	'SMOKYHL6 230.00 - SUMMIT 230KV CKT 1'	319	319	0.62637	106.5045	'GEN515225 1-MUSKOGEE 5G'
13G	03ALL	'FROM->TO'	'SMOKYHL6 230.00 - SUMMIT 230KV CKT 1'	319	319	0.09991	106.5045	'GEN515225 1-MUSKOGEE 5G'
13G	03ALL	'FROM->TO'	'SMOKYHL6 230.00 - SUMMIT 230KV CKT 1'	319	319	0.1274	106.5045	'GEN515225 1-MUSKOGEE 5G'
13G	03ALL	'FROM->TO'	'SMOKYHL6 230.00 - SUMMIT 230KV CKT 1'	319	319	0.10261	106.5045	'GEN515225 1-MUSKOGEE 5G'
13G	03ALL	'FROM->TO'	'SMOKYHL6 230.00 - SUMMIT 230KV CKT 1'	319	319	0.18549	106.7166	'GEN515226 1-MUSKOGEE 6G'
13G	03ALL	'FROM->TO'	'SMOKYHL6 230.00 - SUMMIT 230KV CKT 1'	319	319	0.08979	106.7166	'GEN515226 1-MUSKOGEE 6G'
13G	03ALL	'FROM->TO'	'SMOKYHL6 230.00 - SUMMIT 230KV CKT 1'	319	319	0.10326	106.7166	'GEN515226 1-MUSKOGEE 6G'
13G	03ALL	'FROM->TO'	'SMOKYHL6 230.00 - SUMMIT 230KV CKT 1'	319	319	0.12225	106.7166	'GEN515226 1-MUSKOGEE 6G'
13G	03ALL	'FROM->TO'	'SMOKYHL6 230.00 - SUMMIT 230KV CKT 1'	319	319	0.12225	106.7166	'GEN515226 1-MUSKOGEE 6G'
13G	03ALL	'FROM->TO'	'SMOKYHL6 230.00 - SUMMIT 230KV CKT 1'	319	319	0.07803	106.7166	'GEN515226 1-MUSKOGEE 6G'
13G	03ALL	'FROM->TO'	'SMOKYHL6 230.00 - SUMMIT 230KV CKT 1'	319	319	0.09991	106.7166	'GEN515226 1-MUSKOGEE 6G'
13G	03ALL	'FROM->TO'	'SMOKYHL6 230.00 - SUMMIT 230KV CKT 1'	319	319	0.11509	106.7166	'GEN515226 1-MUSKOGEE 6G'
13G	03ALL	'FROM->TO'	'SMOKYHL6 230.00 - SUMMIT 230KV CKT 1'	319	319	0.11509	106.7166	'GEN515226 1-MUSKOGEE 6G'
13G	03ALL	'FROM->TO'	'SMOKYHL6 230.00 - SUMMIT 230KV CKT 1'	319	319	0.62637	106.7166	'GEN515226 1-MUSKOGEE 6G'
13G	03ALL	'FROM->TO'	'SMOKYHL6 230.00 - SUMMIT 230KV CKT 1'	319	319	0.09991	106.7166	'GEN515226 1-MUSKOGEE 6G'
13G	03ALL	'FROM->TO'	'SMOKYHL6 230.00 - SUMMIT 230KV CKT 1'	319	319	0.1274	106.7166	'GEN515226 1-MUSKOGEE 6G'
13G	03ALL	'FROM->TO'	'SMOKYHL6 230.00 - SUMMIT 230KV CKT 1'	319	319	0.10261	106.7166	'GEN515226 1-MUSKOGEE 6G'
13G	03ALL	'FROM->TO'	'SMOKYHL6 230.00 - SUMMIT 230KV CKT 1'	319	319	0.18549	103.45	'GEN523461 1-BLACKHAWK GEN #1'
13G	03ALL	'FROM->TO'	'SMOKYHL6 230.00 - SUMMIT 230KV CKT 1'	319	319	0.08979	103.45	'GEN523461 1-BLACKHAWK GEN #1'
13G	03ALL	'FROM->TO'	'SMOKYHL6 230.00 - SUMMIT 230KV CKT 1'	319	319	0.10326	103.45	'GEN523461 1-BLACKHAWK GEN #1'
13G	03ALL	'FROM->TO'	'SMOKYHL6 230.00 - SUMMIT 230KV CKT 1'	319	319	0.12225	103.45	'GEN523461 1-BLACKHAWK GEN #1'
13G	03ALL	'FROM->TO'	'SMOKYHL6 230.00 - SUMMIT 230KV CKT 1'	319	319	0.12225	103.45	'GEN523461 1-BLACKHAWK GEN #1'
13G	03ALL	'FROM->TO'	'SMOKYHL6 230.00 - SUMMIT 230KV CKT 1'	319	319	0.07803	103.45	'GEN523461 1-BLACKHAWK GEN #1'
13G	03ALL	'FROM->TO'	'SMOKYHL6 230.00 - SUMMIT 230KV CKT 1'	319	319	0.09991	103.45	'GEN523461 1-BLACKHAWK GEN #1'
13G	03ALL	'FROM->TO'	'SMOKYHL6 230.00 - SUMMIT 230KV CKT 1'	319	319	0.11509	103.45	'GEN523461 1-BLACKHAWK GEN #1'
13G	03ALL	'FROM->TO'	'SMOKYHL6 230.00 - SUMMIT 230KV CKT 1'	319	319	0.11509	103.45	'GEN523461 1-BLACKHAWK GEN #1'

SEASON	GROUP	DIRECTION	MONITORED ELEMENT	RATE A (MVA)	RATE B (MVA)	TDF	TC%LOADING (%MVA)	CONTINGENCY NAME
13G	03ALL	'FROM->TO'	'SMOKYHL6 230.00 - SUMMIT 230KV CKT 1'	319	319	0.62637	103.45	'GEN523461 1-BLACKHAWK GEN #1'
13G	03ALL	'FROM->TO'	'SMOKYHL6 230.00 - SUMMIT 230KV CKT 1'	319	319	0.09991	103.45	'GEN523461 1-BLACKHAWK GEN #1'
13G	03ALL	'FROM->TO'	'SMOKYHL6 230.00 - SUMMIT 230KV CKT 1'	319	319	0.1274	103.45	'GEN523461 1-BLACKHAWK GEN #1'
13G	03ALL	'FROM->TO'	'SMOKYHL6 230.00 - SUMMIT 230KV CKT 1'	319	319	0.10261	103.45	'GEN523461 1-BLACKHAWK GEN #1'
13G	03ALL	'FROM->TO'	'SMOKYHL6 230.00 - SUMMIT 230KV CKT 1'	319	319	0.18549	103.449	'GEN523462 1-BLACKHAWK GEN #2'
13G	03ALL	'FROM->TO'	'SMOKYHL6 230.00 - SUMMIT 230KV CKT 1'	319	319	0.08979	103.449	'GEN523462 1-BLACKHAWK GEN #2'
13G	03ALL	'FROM->TO'	'SMOKYHL6 230.00 - SUMMIT 230KV CKT 1'	319	319	0.10326	103.449	'GEN523462 1-BLACKHAWK GEN #2'
13G	03ALL	'FROM->TO'	'SMOKYHL6 230.00 - SUMMIT 230KV CKT 1'	319	319	0.12225	103.449	'GEN523462 1-BLACKHAWK GEN #2'
13G	03ALL	'FROM->TO'	'SMOKYHL6 230.00 - SUMMIT 230KV CKT 1'	319	319	0.12225	103.449	'GEN523462 1-BLACKHAWK GEN #2'
13G	03ALL	'FROM->TO'	'SMOKYHL6 230.00 - SUMMIT 230KV CKT 1'	319	319	0.07803	103.449	'GEN523462 1-BLACKHAWK GEN #2'
13G	03ALL	'FROM->TO'	'SMOKYHL6 230.00 - SUMMIT 230KV CKT 1'	319	319	0.09991	103.449	'GEN523462 1-BLACKHAWK GEN #2'
13G	03ALL	'FROM->TO'	'SMOKYHL6 230.00 - SUMMIT 230KV CKT 1'	319	319	0.11509	103.449	'GEN523462 1-BLACKHAWK GEN #2'
13G	03ALL	'FROM->TO'	'SMOKYHL6 230.00 - SUMMIT 230KV CKT 1'	319	319	0.11509	103.449	'GEN523462 1-BLACKHAWK GEN #2'
13G	03ALL	'FROM->TO'	'SMOKYHL6 230.00 - SUMMIT 230KV CKT 1'	319	319	0.62637	103.449	'GEN523462 1-BLACKHAWK GEN #2'
13G	03ALL	'FROM->TO'	'SMOKYHL6 230.00 - SUMMIT 230KV CKT 1'	319	319	0.09991	103.449	'GEN523462 1-BLACKHAWK GEN #2'
13G	03ALL	'FROM->TO'	'SMOKYHL6 230.00 - SUMMIT 230KV CKT 1'	319	319	0.1274	103.449	'GEN523462 1-BLACKHAWK GEN #2'
13G	03ALL	'FROM->TO'	'SMOKYHL6 230.00 - SUMMIT 230KV CKT 1'	319	319	0.10261	103.449	'GEN523462 1-BLACKHAWK GEN #2'
13G	03ALL	'FROM->TO'	'SMOKYHL6 230.00 - SUMMIT 230KV CKT 1'	319	319	0.18549	100.1966	'GEN523971 1-HARRINGTON GEN #1 24 KV'
13G	03ALL	'FROM->TO'	'SMOKYHL6 230.00 - SUMMIT 230KV CKT 1'	319	319	0.08979	100.1966	'GEN523971 1-HARRINGTON GEN #1 24 KV'
13G	03ALL	'FROM->TO'	'SMOKYHL6 230.00 - SUMMIT 230KV CKT 1'	319	319	0.10326	100.1966	'GEN523971 1-HARRINGTON GEN #1 24 KV'
13G	03ALL	'FROM->TO'	'SMOKYHL6 230.00 - SUMMIT 230KV CKT 1'	319	319	0.12225	100.1966	'GEN523971 1-HARRINGTON GEN #1 24 KV'
13G	03ALL	'FROM->TO'	'SMOKYHL6 230.00 - SUMMIT 230KV CKT 1'	319	319	0.12225	100.1966	'GEN523971 1-HARRINGTON GEN #1 24 KV'
13G	03ALL	'FROM->TO'	'SMOKYHL6 230.00 - SUMMIT 230KV CKT 1'	319	319	0.07803	100.1966	'GEN523971 1-HARRINGTON GEN #1 24 KV'
13G	03ALL	'FROM->TO'	'SMOKYHL6 230.00 - SUMMIT 230KV CKT 1'	319	319	0.09991	100.1966	'GEN523971 1-HARRINGTON GEN #1 24 KV'
13G	03ALL	'FROM->TO'	'SMOKYHL6 230.00 - SUMMIT 230KV CKT 1'	319	319	0.11509	100.1966	'GEN523971 1-HARRINGTON GEN #1 24 KV'
13G	03ALL	'FROM->TO'	'SMOKYHL6 230.00 - SUMMIT 230KV CKT 1'	319	319	0.11509	100.1966	'GEN523971 1-HARRINGTON GEN #1 24 KV'
13G	03ALL	'FROM->TO'	'SMOKYHL6 230.00 - SUMMIT 230KV CKT 1'	319	319	0.62637	100.1966	'GEN523971 1-HARRINGTON GEN #1 24 KV'
13G	03ALL	'FROM->TO'	'SMOKYHL6 230.00 - SUMMIT 230KV CKT 1'	319	319	0.09991	100.1966	'GEN523971 1-HARRINGTON GEN #1 24 KV'
13G	03ALL	'FROM->TO'	'SMOKYHL6 230.00 - SUMMIT 230KV CKT 1'	319	319	0.1274	100.1966	'GEN523971 1-HARRINGTON GEN #1 24 KV'
13G	03ALL	'FROM->TO'	'SMOKYHL6 230.00 - SUMMIT 230KV CKT 1'	319	319	0.10261	100.1966	'GEN523971 1-HARRINGTON GEN #1 24 KV'
13G	03ALL	'TO->FROM'	'CLEARWATER - MILAN TAP 138KV CKT 1'	110	110	0.03559	118.1918	'GEN523971 1-HARRINGTON GEN #1 24 KV'
13G	03ALL	'TO->FROM'	'CLEARWATER - MILAN TAP 138KV CKT 1'	110	110	0.06218	118.1918	'GEN523971 1-HARRINGTON GEN #1 24 KV'
13G	03ALL	'TO->FROM'	'CLEARWATER - MILAN TAP 138KV CKT 1'	110	110	0.10851	118.1918	'GEN523971 1-HARRINGTON GEN #1 24 KV'
13G	03ALL	'TO->FROM'	'CLEARWATER - MILAN TAP 138KV CKT 1'	110	110	0.04844	118.1918	'GEN523971 1-HARRINGTON GEN #1 24 KV'
13G	03ALL	'TO->FROM'	'CLEARWATER - MILAN TAP 138KV CKT 1'	110	110	0.04844	118.1918	'GEN523971 1-HARRINGTON GEN #1 24 KV'
13G	03ALL	'TO->FROM'	'CLEARWATER - MILAN TAP 138KV CKT 1'	110	110	0.2104	118.1918	'GEN523971 1-HARRINGTON GEN #1 24 KV'
13G	03ALL	'TO->FROM'	'CLEARWATER - MILAN TAP 138KV CKT 1'	110	110	0.03753	118.1918	'GEN523971 1-HARRINGTON GEN #1 24 KV'
13G	03ALL	'TO->FROM'	'CLEARWATER - MILAN TAP 138KV CKT 1'	110	110	0.0394	118.1918	'GEN523971 1-HARRINGTON GEN #1 24 KV'
13G	03ALL	'TO->FROM'	'CLEARWATER - MILAN TAP 138KV CKT 1'	110	110	0.0394	118.1918	'GEN523971 1-HARRINGTON GEN #1 24 KV'
13G	03ALL	'TO->FROM'	'CLEARWATER - MILAN TAP 138KV CKT 1'	110	110	0.52726	118.1918	'GEN523971 1-HARRINGTON GEN #1 24 KV'
13G	03ALL	'TO->FROM'	'CLEARWATER - MILAN TAP 138KV CKT 1'	110	110	0.03696	118.1918	'GEN523971 1-HARRINGTON GEN #1 24 KV'
13G	03ALL	'TO->FROM'	'CLEARWATER - MILAN TAP 138KV CKT 1'	110	110	0.04265	118.1918	'GEN523971 1-HARRINGTON GEN #1 24 KV'
13G	03ALL	'TO->FROM'	'CLEARWATER - MILAN TAP 138KV CKT 1'	110	110	0.03608	118.1918	'GEN523971 1-HARRINGTON GEN #1 24 KV'
13G	03ALL	'TO->FROM'	'GREENSBURG - SSTARTP3 115.00 115KV CKT 1	120.7	129.5	0.17753	102.2225	'GEN523971 1-HARRINGTON GEN #1 24 KV'
13G	03ALL	'TO->FROM'	'GREENSBURG - SSTARTP3 115.00 115KV CKT 1	120.7	129.5	0.04472	102.2225	'GEN523971 1-HARRINGTON GEN #1 24 KV'
13G	03ALL	'TO->FROM'	'GREENSBURG - SSTARTP3 115.00 115KV CKT 1	120.7	129.5	0.04472	102.2225	'GEN523971 1-HARRINGTON GEN #1 24 KV'
13G	03ALL	'TO->FROM'	'GREENSBURG - SSTARTP3 115.00 115KV CKT 1	120.7	129.5	0.39904	102.2225	'GEN523971 1-HARRINGTON GEN #1 24 KV'
13G	03ALL	'TO->FROM'	'GREENSBURG - SSTARTP3 115.00 115KV CKT 1	120.7	129.5	0.0299	102.2225	'GEN523971 1-HARRINGTON GEN #1 24 KV'
13G	03ALL	'TO->FROM'	'GREENSBURG - SSTARTP3 115.00 115KV CKT 1	120.7	129.5	0.03411	102.2225	'GEN523971 1-HARRINGTON GEN #1 24 KV'
13G	03ALL	'TO->FROM'	'GREENSBURG - SSTARTP3 115.00 115KV CKT 1	120.7	129.5	0.03411	102.2225	'GEN523971 1-HARRINGTON GEN #1 24 KV'
13G	03ALL	'TO->FROM'	'GREENSBURG - SSTARTP3 115.00 115KV CKT 1	120.7	129.5	0.02996	102.2225	'GEN523971 1-HARRINGTON GEN #1 24 KV'
13G	03ALL	'TO->FROM'	'GREENSBURG - SSTARTP3 115.00 115KV CKT 1	120.7	129.5	0.03691	102.2225	'GEN523971 1-HARRINGTON GEN #1 24 KV'
13G	03ALL	'TO->FROM'	'GREENSBURG - SSTARTP3 115.00 115KV CKT 1	120.7	129.5	0.03126	102.2225	'GEN523971 1-HARRINGTON GEN #1 24 KV'
13G	03ALL	'FROM->TO'	'HARPER - MILAN TAP 138KV CKT 1'	95.6	95.6	0.03559	143.3795	'GEN523971 1-HARRINGTON GEN #1 24 KV'
13G	03ALL	'FROM->TO'	'HARPER - MILAN TAP 138KV CKT 1'	95.6	95.6	0.06218	143.3795	'GEN523971 1-HARRINGTON GEN #1 24 KV'
13G	03ALL	'FROM->TO'	'HARPER - MILAN TAP 138KV CKT 1'	95.6	95.6	0.10851	143.3795	'GEN523971 1-HARRINGTON GEN #1 24 KV'
13G	03ALL	'FROM->TO'	'HARPER - MILAN TAP 138KV CKT 1'	95.6	95.6	0.04844	143.3795	'GEN523971 1-HARRINGTON GEN #1 24 KV'
13G	03ALL	'FROM->TO'	'HARPER - MILAN TAP 138KV CKT 1'	95.6	95.6	0.04844	143.3795	'GEN523971 1-HARRINGTON GEN #1 24 KV'
13G	03ALL	'FROM->TO'	'HARPER - MILAN TAP 138KV CKT 1'	95.6	95.6	0.2104	143.3795	'GEN523971 1-HARRINGTON GEN #1 24 KV'
13G	03ALL	'FROM->TO'	'HARPER - MILAN TAP 138KV CKT 1'	95.6	95.6	0.03753	143.3795	'GEN523971 1-HARRINGTON GEN #1 24 KV'
13G	03ALL	'FROM->TO'	'HARPER - MILAN TAP 138KV CKT 1'	95.6	95.6	0.0394	143.3795	'GEN523971 1-HARRINGTON GEN #1 24 KV'
13G	03ALL	'FROM->TO'	'HARPER - MILAN TAP 138KV CKT 1'	95.6	95.6	0.0394	143.3795	'GEN523971 1-HARRINGTON GEN #1 24 KV'
13G	03ALL	'FROM->TO'	'HARPER - MILAN TAP 138KV CKT 1'	95.6	95.6	0.52726	143.3795	'GEN523971 1-HARRINGTON GEN #1 24 KV'
13G	03ALL	'FROM->TO'	'HARPER - MILAN TAP 138KV CKT 1'	95.6	95.6	0.03696	143.3795	'GEN523971 1-HARRINGTON GEN #1 24 KV'

SEASON	GROUP	DIRECTION	MONITORED ELEMENT	RATE A (MVA)	RATE B (MVA)	TDF	TC%LOADING (%MVA)	CONTINGENCY NAME
13G	03ALL	'FROM->TO'	'HARPER - MILAN TAP 138KV CKT 1'	95.6	95.6	0.04265	143.3795	'GEN523971 1-HARRINGTON GEN #1 24 KV'
13G	03ALL	'FROM->TO'	'HARPER - MILAN TAP 138KV CKT 1'	95.6	95.6	0.03608	143.3795	'GEN523971 1-HARRINGTON GEN #1 24 KV'
13G	03ALL	'FROM->TO'	'SMOKYHL6 230.00 - SUMMIT 230KV CKT 1'	319	319	0.18549	100.1895	'GEN523972 1-HARRINGTON GEN #2 24 KV'
13G	03ALL	'FROM->TO'	'SMOKYHL6 230.00 - SUMMIT 230KV CKT 1'	319	319	0.08979	100.1895	'GEN523972 1-HARRINGTON GEN #2 24 KV'
13G	03ALL	'FROM->TO'	'SMOKYHL6 230.00 - SUMMIT 230KV CKT 1'	319	319	0.10326	100.1895	'GEN523972 1-HARRINGTON GEN #2 24 KV'
13G	03ALL	'FROM->TO'	'SMOKYHL6 230.00 - SUMMIT 230KV CKT 1'	319	319	0.12225	100.1895	'GEN523972 1-HARRINGTON GEN #2 24 KV'
13G	03ALL	'FROM->TO'	'SMOKYHL6 230.00 - SUMMIT 230KV CKT 1'	319	319	0.12225	100.1895	'GEN523972 1-HARRINGTON GEN #2 24 KV'
13G	03ALL	'FROM->TO'	'SMOKYHL6 230.00 - SUMMIT 230KV CKT 1'	319	319	0.07803	100.1895	'GEN523972 1-HARRINGTON GEN #2 24 KV'
13G	03ALL	'FROM->TO'	'SMOKYHL6 230.00 - SUMMIT 230KV CKT 1'	319	319	0.09991	100.1895	'GEN523972 1-HARRINGTON GEN #2 24 KV'
13G	03ALL	'FROM->TO'	'SMOKYHL6 230.00 - SUMMIT 230KV CKT 1'	319	319	0.11509	100.1895	'GEN523972 1-HARRINGTON GEN #2 24 KV'
13G	03ALL	'FROM->TO'	'SMOKYHL6 230.00 - SUMMIT 230KV CKT 1'	319	319	0.11509	100.1895	'GEN523972 1-HARRINGTON GEN #2 24 KV'
13G	03ALL	'FROM->TO'	'SMOKYHL6 230.00 - SUMMIT 230KV CKT 1'	319	319	0.62637	100.1895	'GEN523972 1-HARRINGTON GEN #2 24 KV'
13G	03ALL	'FROM->TO'	'SMOKYHL6 230.00 - SUMMIT 230KV CKT 1'	319	319	0.09991	100.1895	'GEN523972 1-HARRINGTON GEN #2 24 KV'
13G	03ALL	'FROM->TO'	'SMOKYHL6 230.00 - SUMMIT 230KV CKT 1'	319	319	0.1274	100.1895	'GEN523972 1-HARRINGTON GEN #2 24 KV'
13G	03ALL	'FROM->TO'	'SMOKYHL6 230.00 - SUMMIT 230KV CKT 1'	319	319	0.10261	100.1895	'GEN523972 1-HARRINGTON GEN #2 24 KV'
13G	03ALL	'TO->FROM'	'CLEARWATER - MILAN TAP 138KV CKT 1'	110	110	0.03559	118.1852	'GEN523972 1-HARRINGTON GEN #2 24 KV'
13G	03ALL	'TO->FROM'	'CLEARWATER - MILAN TAP 138KV CKT 1'	110	110	0.06218	118.1852	'GEN523972 1-HARRINGTON GEN #2 24 KV'
13G	03ALL	'TO->FROM'	'CLEARWATER - MILAN TAP 138KV CKT 1'	110	110	0.10851	118.1852	'GEN523972 1-HARRINGTON GEN #2 24 KV'
13G	03ALL	'TO->FROM'	'CLEARWATER - MILAN TAP 138KV CKT 1'	110	110	0.04844	118.1852	'GEN523972 1-HARRINGTON GEN #2 24 KV'
13G	03ALL	'TO->FROM'	'CLEARWATER - MILAN TAP 138KV CKT 1'	110	110	0.04844	118.1852	'GEN523972 1-HARRINGTON GEN #2 24 KV'
13G	03ALL	'TO->FROM'	'CLEARWATER - MILAN TAP 138KV CKT 1'	110	110	0.2104	118.1852	'GEN523972 1-HARRINGTON GEN #2 24 KV'
13G	03ALL	'TO->FROM'	'CLEARWATER - MILAN TAP 138KV CKT 1'	110	110	0.03753	118.1852	'GEN523972 1-HARRINGTON GEN #2 24 KV'
13G	03ALL	'TO->FROM'	'CLEARWATER - MILAN TAP 138KV CKT 1'	110	110	0.0394	118.1852	'GEN523972 1-HARRINGTON GEN #2 24 KV'
13G	03ALL	'TO->FROM'	'CLEARWATER - MILAN TAP 138KV CKT 1'	110	110	0.0394	118.1852	'GEN523972 1-HARRINGTON GEN #2 24 KV'
13G	03ALL	'TO->FROM'	'CLEARWATER - MILAN TAP 138KV CKT 1'	110	110	0.52726	118.1852	'GEN523972 1-HARRINGTON GEN #2 24 KV'
13G	03ALL	'TO->FROM'	'CLEARWATER - MILAN TAP 138KV CKT 1'	110	110	0.03696	118.1852	'GEN523972 1-HARRINGTON GEN #2 24 KV'
13G	03ALL	'TO->FROM'	'CLEARWATER - MILAN TAP 138KV CKT 1'	110	110	0.04265	118.1852	'GEN523972 1-HARRINGTON GEN #2 24 KV'
13G	03ALL	'TO->FROM'	'CLEARWATER - MILAN TAP 138KV CKT 1'	110	110	0.03608	118.1852	'GEN523972 1-HARRINGTON GEN #2 24 KV'
13G	03ALL	'TO->FROM'	'GREENSBURG - SSTARTP3 115.00 115KV CKT 1	120.7	129.5	0.17753	102.217	'GEN523972 1-HARRINGTON GEN #2 24 KV'
13G	03ALL	'TO->FROM'	'GREENSBURG - SSTARTP3 115.00 115KV CKT 1	120.7	129.5	0.04472	102.217	'GEN523972 1-HARRINGTON GEN #2 24 KV'
13G	03ALL	'TO->FROM'	'GREENSBURG - SSTARTP3 115.00 115KV CKT 1	120.7	129.5	0.04472	102.217	'GEN523972 1-HARRINGTON GEN #2 24 KV'
13G	03ALL	'TO->FROM'	'GREENSBURG - SSTARTP3 115.00 115KV CKT 1	120.7	129.5	0.39904	102.217	'GEN523972 1-HARRINGTON GEN #2 24 KV'
13G	03ALL	'TO->FROM'	'GREENSBURG - SSTARTP3 115.00 115KV CKT 1	120.7	129.5	0.0299	102.217	'GEN523972 1-HARRINGTON GEN #2 24 KV'
13G	03ALL	'TO->FROM'	'GREENSBURG - SSTARTP3 115.00 115KV CKT 1	120.7	129.5	0.03411	102.217	'GEN523972 1-HARRINGTON GEN #2 24 KV'
13G	03ALL	'TO->FROM'	'GREENSBURG - SSTARTP3 115.00 115KV CKT 1	120.7	129.5	0.03411	102.217	'GEN523972 1-HARRINGTON GEN #2 24 KV'
13G	03ALL	'TO->FROM'	'GREENSBURG - SSTARTP3 115.00 115KV CKT 1	120.7	129.5	0.02996	102.217	'GEN523972 1-HARRINGTON GEN #2 24 KV'
13G	03ALL	'TO->FROM'	'GREENSBURG - SSTARTP3 115.00 115KV CKT 1	120.7	129.5	0.03691	102.217	'GEN523972 1-HARRINGTON GEN #2 24 KV'
13G	03ALL	'TO->FROM'	'GREENSBURG - SSTARTP3 115.00 115KV CKT 1	120.7	129.5	0.03126	102.217	'GEN523972 1-HARRINGTON GEN #2 24 KV'
13G	03ALL	'FROM->TO'	'HARPER - MILAN TAP 138KV CKT 1'	95.6	95.6	0.03559	143.372	'GEN523972 1-HARRINGTON GEN #2 24 KV'
13G	03ALL	'FROM->TO'	'HARPER - MILAN TAP 138KV CKT 1'	95.6	95.6	0.06218	143.372	'GEN523972 1-HARRINGTON GEN #2 24 KV'
13G	03ALL	'FROM->TO'	'HARPER - MILAN TAP 138KV CKT 1'	95.6	95.6	0.10851	143.372	'GEN523972 1-HARRINGTON GEN #2 24 KV'
13G	03ALL	'FROM->TO'	'HARPER - MILAN TAP 138KV CKT 1'	95.6	95.6	0.04844	143.372	'GEN523972 1-HARRINGTON GEN #2 24 KV'
13G	03ALL	'FROM->TO'	'HARPER - MILAN TAP 138KV CKT 1'	95.6	95.6	0.04844	143.372	'GEN523972 1-HARRINGTON GEN #2 24 KV'
13G	03ALL	'FROM->TO'	'HARPER - MILAN TAP 138KV CKT 1'	95.6	95.6	0.2104	143.372	'GEN523972 1-HARRINGTON GEN #2 24 KV'
13G	03ALL	'FROM->TO'	'HARPER - MILAN TAP 138KV CKT 1'	95.6	95.6	0.03753	143.372	'GEN523972 1-HARRINGTON GEN #2 24 KV'
13G	03ALL	'FROM->TO'	'HARPER - MILAN TAP 138KV CKT 1'	95.6	95.6	0.0394	143.372	'GEN523972 1-HARRINGTON GEN #2 24 KV'
13G	03ALL	'FROM->TO'	'HARPER - MILAN TAP 138KV CKT 1'	95.6	95.6	0.0394	143.372	'GEN523972 1-HARRINGTON GEN #2 24 KV'
13G	03ALL	'FROM->TO'	'HARPER - MILAN TAP 138KV CKT 1'	95.6	95.6	0.52726	143.372	'GEN523972 1-HARRINGTON GEN #2 24 KV'
13G	03ALL	'FROM->TO'	'HARPER - MILAN TAP 138KV CKT 1'	95.6	95.6	0.03696	143.372	'GEN523972 1-HARRINGTON GEN #2 24 KV'
13G	03ALL	'FROM->TO'	'HARPER - MILAN TAP 138KV CKT 1'	95.6	95.6	0.04265	143.372	'GEN523972 1-HARRINGTON GEN #2 24 KV'
13G	03ALL	'FROM->TO'	'HARPER - MILAN TAP 138KV CKT 1'	95.6	95.6	0.03608	143.372	'GEN523972 1-HARRINGTON GEN #2 24 KV'
13G	03ALL	'FROM->TO'	'SMOKYHL6 230.00 - SUMMIT 230KV CKT 1'	319	319	0.18549	100.2372	'GEN523973 1-HARRINGTON GEN #3 24 KV'
13G	03ALL	'FROM->TO'	'SMOKYHL6 230.00 - SUMMIT 230KV CKT 1'	319	319	0.08979	100.2372	'GEN523973 1-HARRINGTON GEN #3 24 KV'
13G	03ALL	'FROM->TO'	'SMOKYHL6 230.00 - SUMMIT 230KV CKT 1'	319	319	0.10326	100.2372	'GEN523973 1-HARRINGTON GEN #3 24 KV'
13G	03ALL	'FROM->TO'	'SMOKYHL6 230.00 - SUMMIT 230KV CKT 1'	319	319	0.12225	100.2372	'GEN523973 1-HARRINGTON GEN #3 24 KV'
13G	03ALL	'FROM->TO'	'SMOKYHL6 230.00 - SUMMIT 230KV CKT 1'	319	319	0.12225	100.2372	'GEN523973 1-HARRINGTON GEN #3 24 KV'
13G	03ALL	'FROM->TO'	'SMOKYHL6 230.00 - SUMMIT 230KV CKT 1'	319	319	0.07803	100.2372	'GEN523973 1-HARRINGTON GEN #3 24 KV'
13G	03ALL	'FROM->TO'	'SMOKYHL6 230.00 - SUMMIT 230KV CKT 1'	319	319	0.09991	100.2372	'GEN523973 1-HARRINGTON GEN #3 24 KV'
13G	03ALL	'FROM->TO'	'SMOKYHL6 230.00 - SUMMIT 230KV CKT 1'	319	319	0.11509	100.2372	'GEN523973 1-HARRINGTON GEN #3 24 KV'
13G	03ALL	'FROM->TO'	'SMOKYHL6 230.00 - SUMMIT 230KV CKT 1'	319	319	0.11509	100.2372	'GEN523973 1-HARRINGTON GEN #3 24 KV'
13G	03ALL	'FROM->TO'	'SMOKYHL6 230.00 - SUMMIT 230KV CKT 1'	319	319	0.62637	100.2372	'GEN523973 1-HARRINGTON GEN #3 24 KV'
13G	03ALL	'FROM->TO'	'SMOKYHL6 230.00 - SUMMIT 230KV CKT 1'	319	319	0.09991	100.2372	'GEN523973 1-HARRINGTON GEN #3 24 KV'
13G	03ALL	'FROM->TO'	'SMOKYHL6 230.00 - SUMMIT 230KV CKT 1'	319	319	0.1274	100.2372	'GEN523973 1-HARRINGTON GEN #3 24 KV'
13G	03ALL	'FROM->TO'	'SMOKYHL6 230.00 - SUMMIT 230KV CKT 1'	319	319	0.10261	100.2372	'GEN523973 1-HARRINGTON GEN #3 24 KV'

SEASON	GROUP	DIRECTION	MONITORED ELEMENT	RATE A (MVA)	RATE B (MVA)	TDF	TC%LOADING (%MVA)	CONTINGENCY NAME
13G	03ALL	'TO->FROM'	'CLEARWATER - MILAN TAP 138KV CKT 1'	110	110	0.03559	118.2274	'GEN523973 1-HARRINGTON GEN #3 24 KV'
13G	03ALL	'TO->FROM'	'CLEARWATER - MILAN TAP 138KV CKT 1'	110	110	0.06218	118.2274	'GEN523973 1-HARRINGTON GEN #3 24 KV'
13G	03ALL	'TO->FROM'	'CLEARWATER - MILAN TAP 138KV CKT 1'	110	110	0.10851	118.2274	'GEN523973 1-HARRINGTON GEN #3 24 KV'
13G	03ALL	'TO->FROM'	'CLEARWATER - MILAN TAP 138KV CKT 1'	110	110	0.04844	118.2274	'GEN523973 1-HARRINGTON GEN #3 24 KV'
13G	03ALL	'TO->FROM'	'CLEARWATER - MILAN TAP 138KV CKT 1'	110	110	0.04844	118.2274	'GEN523973 1-HARRINGTON GEN #3 24 KV'
13G	03ALL	'TO->FROM'	'CLEARWATER - MILAN TAP 138KV CKT 1'	110	110	0.2104	118.2274	'GEN523973 1-HARRINGTON GEN #3 24 KV'
13G	03ALL	'TO->FROM'	'CLEARWATER - MILAN TAP 138KV CKT 1'	110	110	0.03753	118.2274	'GEN523973 1-HARRINGTON GEN #3 24 KV'
13G	03ALL	'TO->FROM'	'CLEARWATER - MILAN TAP 138KV CKT 1'	110	110	0.0394	118.2274	'GEN523973 1-HARRINGTON GEN #3 24 KV'
13G	03ALL	'TO->FROM'	'CLEARWATER - MILAN TAP 138KV CKT 1'	110	110	0.0394	118.2274	'GEN523973 1-HARRINGTON GEN #3 24 KV'
13G	03ALL	'TO->FROM'	'CLEARWATER - MILAN TAP 138KV CKT 1'	110	110	0.52726	118.2274	'GEN523973 1-HARRINGTON GEN #3 24 KV'
13G	03ALL	'TO->FROM'	'CLEARWATER - MILAN TAP 138KV CKT 1'	110	110	0.03696	118.2274	'GEN523973 1-HARRINGTON GEN #3 24 KV'
13G	03ALL	'TO->FROM'	'CLEARWATER - MILAN TAP 138KV CKT 1'	110	110	0.04265	118.2274	'GEN523973 1-HARRINGTON GEN #3 24 KV'
13G	03ALL	'TO->FROM'	'CLEARWATER - MILAN TAP 138KV CKT 1'	110	110	0.03608	118.2274	'GEN523973 1-HARRINGTON GEN #3 24 KV'
13G	03ALL	'TO->FROM'	'GREENSBURG - SSTARTP3 115.00 115KV CKT 1	120.7	129.5	0.17753	102.2611	'GEN523973 1-HARRINGTON GEN #3 24 KV'
13G	03ALL	'TO->FROM'	'GREENSBURG - SSTARTP3 115.00 115KV CKT 1	120.7	129.5	0.04472	102.2611	'GEN523973 1-HARRINGTON GEN #3 24 KV'
13G	03ALL	'TO->FROM'	'GREENSBURG - SSTARTP3 115.00 115KV CKT 1	120.7	129.5	0.04472	102.2611	'GEN523973 1-HARRINGTON GEN #3 24 KV'
13G	03ALL	'TO->FROM'	'GREENSBURG - SSTARTP3 115.00 115KV CKT 1	120.7	129.5	0.39904	102.2611	'GEN523973 1-HARRINGTON GEN #3 24 KV'
13G	03ALL	'TO->FROM'	'GREENSBURG - SSTARTP3 115.00 115KV CKT 1	120.7	129.5	0.0299	102.2611	'GEN523973 1-HARRINGTON GEN #3 24 KV'
13G	03ALL	'TO->FROM'	'GREENSBURG - SSTARTP3 115.00 115KV CKT 1	120.7	129.5	0.03411	102.2611	'GEN523973 1-HARRINGTON GEN #3 24 KV'
13G	03ALL	'TO->FROM'	'GREENSBURG - SSTARTP3 115.00 115KV CKT 1	120.7	129.5	0.03411	102.2611	'GEN523973 1-HARRINGTON GEN #3 24 KV'
13G	03ALL	'TO->FROM'	'GREENSBURG - SSTARTP3 115.00 115KV CKT 1	120.7	129.5	0.02996	102.2611	'GEN523973 1-HARRINGTON GEN #3 24 KV'
13G	03ALL	'TO->FROM'	'GREENSBURG - SSTARTP3 115.00 115KV CKT 1	120.7	129.5	0.03691	102.2611	'GEN523973 1-HARRINGTON GEN #3 24 KV'
13G	03ALL	'TO->FROM'	'GREENSBURG - SSTARTP3 115.00 115KV CKT 1	120.7	129.5	0.03126	102.2611	'GEN523973 1-HARRINGTON GEN #3 24 KV'
13G	03ALL	'FROM->TO'	'HARPER - MILAN TAP 138KV CKT 1'	95.6	95.6	0.03559	143.42	'GEN523973 1-HARRINGTON GEN #3 24 KV'
13G	03ALL	'FROM->TO'	'HARPER - MILAN TAP 138KV CKT 1'	95.6	95.6	0.06218	143.42	'GEN523973 1-HARRINGTON GEN #3 24 KV'
13G	03ALL	'FROM->TO'	'HARPER - MILAN TAP 138KV CKT 1'	95.6	95.6	0.10851	143.42	'GEN523973 1-HARRINGTON GEN #3 24 KV'
13G	03ALL	'FROM->TO'	'HARPER - MILAN TAP 138KV CKT 1'	95.6	95.6	0.04844	143.42	'GEN523973 1-HARRINGTON GEN #3 24 KV'
13G	03ALL	'FROM->TO'	'HARPER - MILAN TAP 138KV CKT 1'	95.6	95.6	0.04844	143.42	'GEN523973 1-HARRINGTON GEN #3 24 KV'
13G	03ALL	'FROM->TO'	'HARPER - MILAN TAP 138KV CKT 1'	95.6	95.6	0.2104	143.42	'GEN523973 1-HARRINGTON GEN #3 24 KV'
13G	03ALL	'FROM->TO'	'HARPER - MILAN TAP 138KV CKT 1'	95.6	95.6	0.03753	143.42	'GEN523973 1-HARRINGTON GEN #3 24 KV'
13G	03ALL	'FROM->TO'	'HARPER - MILAN TAP 138KV CKT 1'	95.6	95.6	0.0394	143.42	'GEN523973 1-HARRINGTON GEN #3 24 KV'
13G	03ALL	'FROM->TO'	'HARPER - MILAN TAP 138KV CKT 1'	95.6	95.6	0.0394	143.42	'GEN523973 1-HARRINGTON GEN #3 24 KV'
13G	03ALL	'FROM->TO'	'HARPER - MILAN TAP 138KV CKT 1'	95.6	95.6	0.52726	143.42	'GEN523973 1-HARRINGTON GEN #3 24 KV'
13G	03ALL	'FROM->TO'	'HARPER - MILAN TAP 138KV CKT 1'	95.6	95.6	0.03696	143.42	'GEN523973 1-HARRINGTON GEN #3 24 KV'
13G	03ALL	'FROM->TO'	'HARPER - MILAN TAP 138KV CKT 1'	95.6	95.6	0.04265	143.42	'GEN523973 1-HARRINGTON GEN #3 24 KV'
13G	03ALL	'FROM->TO'	'HARPER - MILAN TAP 138KV CKT 1'	95.6	95.6	0.03608	143.42	'GEN523973 1-HARRINGTON GEN #3 24 KV'
13G	03ALL	'FROM->TO'	'SMOKYHL6 230.00 - SUMMIT 230KV CKT 1'	319	319	0.18549	103.9238	'GEN524295 1-SPNSPUR_WND134.500'
13G	03ALL	'FROM->TO'	'SMOKYHL6 230.00 - SUMMIT 230KV CKT 1'	319	319	0.08979	103.9238	'GEN524295 1-SPNSPUR_WND134.500'
13G	03ALL	'FROM->TO'	'SMOKYHL6 230.00 - SUMMIT 230KV CKT 1'	319	319	0.10326	103.9238	'GEN524295 1-SPNSPUR_WND134.500'
13G	03ALL	'FROM->TO'	'SMOKYHL6 230.00 - SUMMIT 230KV CKT 1'	319	319	0.12225	103.9238	'GEN524295 1-SPNSPUR_WND134.500'
13G	03ALL	'FROM->TO'	'SMOKYHL6 230.00 - SUMMIT 230KV CKT 1'	319	319	0.12225	103.9238	'GEN524295 1-SPNSPUR_WND134.500'
13G	03ALL	'FROM->TO'	'SMOKYHL6 230.00 - SUMMIT 230KV CKT 1'	319	319	0.07803	103.9238	'GEN524295 1-SPNSPUR_WND134.500'
13G	03ALL	'FROM->TO'	'SMOKYHL6 230.00 - SUMMIT 230KV CKT 1'	319	319	0.09991	103.9238	'GEN524295 1-SPNSPUR_WND134.500'
13G	03ALL	'FROM->TO'	'SMOKYHL6 230.00 - SUMMIT 230KV CKT 1'	319	319	0.11509	103.9238	'GEN524295 1-SPNSPUR_WND134.500'
13G	03ALL	'FROM->TO'	'SMOKYHL6 230.00 - SUMMIT 230KV CKT 1'	319	319	0.11509	103.9238	'GEN524295 1-SPNSPUR_WND134.500'
13G	03ALL	'FROM->TO'	'SMOKYHL6 230.00 - SUMMIT 230KV CKT 1'	319	319	0.62637	103.9238	'GEN524295 1-SPNSPUR_WND134.500'
13G	03ALL	'FROM->TO'	'SMOKYHL6 230.00 - SUMMIT 230KV CKT 1'	319	319	0.09991	103.9238	'GEN524295 1-SPNSPUR_WND134.500'
13G	03ALL	'FROM->TO'	'SMOKYHL6 230.00 - SUMMIT 230KV CKT 1'	319	319	0.1274	103.9238	'GEN524295 1-SPNSPUR_WND134.500'
13G	03ALL	'FROM->TO'	'SMOKYHL6 230.00 - SUMMIT 230KV CKT 1'	319	319	0.10261	103.9238	'GEN524295 1-SPNSPUR_WND134.500'
13G	03ALL	'FROM->TO'	'SMOKYHL6 230.00 - SUMMIT 230KV CKT 1'	319	319	0.18549	102.9745	'GEN525494 1-PLANT X GEN #4 20 KV'
13G	03ALL	'FROM->TO'	'SMOKYHL6 230.00 - SUMMIT 230KV CKT 1'	319	319	0.08979	102.9745	'GEN525494 1-PLANT X GEN #4 20 KV'
13G	03ALL	'FROM->TO'	'SMOKYHL6 230.00 - SUMMIT 230KV CKT 1'	319	319	0.10326	102.9745	'GEN525494 1-PLANT X GEN #4 20 KV'
13G	03ALL	'FROM->TO'	'SMOKYHL6 230.00 - SUMMIT 230KV CKT 1'	319	319	0.12225	102.9745	'GEN525494 1-PLANT X GEN #4 20 KV'
13G	03ALL	'FROM->TO'	'SMOKYHL6 230.00 - SUMMIT 230KV CKT 1'	319	319	0.12225	102.9745	'GEN525494 1-PLANT X GEN #4 20 KV'
13G	03ALL	'FROM->TO'	'SMOKYHL6 230.00 - SUMMIT 230KV CKT 1'	319	319	0.07803	102.9745	'GEN525494 1-PLANT X GEN #4 20 KV'
13G	03ALL	'FROM->TO'	'SMOKYHL6 230.00 - SUMMIT 230KV CKT 1'	319	319	0.09991	102.9745	'GEN525494 1-PLANT X GEN #4 20 KV'
13G	03ALL	'FROM->TO'	'SMOKYHL6 230.00 - SUMMIT 230KV CKT 1'	319	319	0.11509	102.9745	'GEN525494 1-PLANT X GEN #4 20 KV'
13G	03ALL	'FROM->TO'	'SMOKYHL6 230.00 - SUMMIT 230KV CKT 1'	319	319	0.11509	102.9745	'GEN525494 1-PLANT X GEN #4 20 KV'
13G	03ALL	'FROM->TO'	'SMOKYHL6 230.00 - SUMMIT 230KV CKT 1'	319	319	0.62637	102.9745	'GEN525494 1-PLANT X GEN #4 20 KV'
13G	03ALL	'FROM->TO'	'SMOKYHL6 230.00 - SUMMIT 230KV CKT 1'	319	319	0.09991	102.9745	'GEN525494 1-PLANT X GEN #4 20 KV'
13G	03ALL	'FROM->TO'	'SMOKYHL6 230.00 - SUMMIT 230KV CKT 1'	319	319	0.1274	102.9745	'GEN525494 1-PLANT X GEN #4 20 KV'
13G	03ALL	'FROM->TO'	'SMOKYHL6 230.00 - SUMMIT 230KV CKT 1'	319	319	0.10261	102.9745	'GEN525494 1-PLANT X GEN #4 20 KV'
13G	03ALL	'TO->FROM'	'CLEARWATER - MILAN TAP 138KV CKT 1'	110	110	0.03559	117.1119	'GEN525561 1-TOLK GEN #1 24 KV'
13G	03ALL	'TO->FROM'	'CLEARWATER - MILAN TAP 138KV CKT 1'	110	110	0.06218	117.1119	'GEN525561 1-TOLK GEN #1 24 KV'

SEASON	GROUP	DIRECTION	MONITORED ELEMENT	RATE A (MVA)	RATE B (MVA)	TDF	TC%LOADING (%MVA)	CONTINGENCY NAME
13G	03ALL	'TO->FROM'	'CLEARWATER - MILAN TAP 138KV CKT 1'	110	110	0.10851	117.1119	'GEN525561 1-TOLK GEN #1 24 KV'
13G	03ALL	'TO->FROM'	'CLEARWATER - MILAN TAP 138KV CKT 1'	110	110	0.04844	117.1119	'GEN525561 1-TOLK GEN #1 24 KV'
13G	03ALL	'TO->FROM'	'CLEARWATER - MILAN TAP 138KV CKT 1'	110	110	0.04844	117.1119	'GEN525561 1-TOLK GEN #1 24 KV'
13G	03ALL	'TO->FROM'	'CLEARWATER - MILAN TAP 138KV CKT 1'	110	110	0.2104	117.1119	'GEN525561 1-TOLK GEN #1 24 KV'
13G	03ALL	'TO->FROM'	'CLEARWATER - MILAN TAP 138KV CKT 1'	110	110	0.03753	117.1119	'GEN525561 1-TOLK GEN #1 24 KV'
13G	03ALL	'TO->FROM'	'CLEARWATER - MILAN TAP 138KV CKT 1'	110	110	0.0394	117.1119	'GEN525561 1-TOLK GEN #1 24 KV'
13G	03ALL	'TO->FROM'	'CLEARWATER - MILAN TAP 138KV CKT 1'	110	110	0.0394	117.1119	'GEN525561 1-TOLK GEN #1 24 KV'
13G	03ALL	'TO->FROM'	'CLEARWATER - MILAN TAP 138KV CKT 1'	110	110	0.52726	117.1119	'GEN525561 1-TOLK GEN #1 24 KV'
13G	03ALL	'TO->FROM'	'CLEARWATER - MILAN TAP 138KV CKT 1'	110	110	0.03696	117.1119	'GEN525561 1-TOLK GEN #1 24 KV'
13G	03ALL	'TO->FROM'	'CLEARWATER - MILAN TAP 138KV CKT 1'	110	110	0.04265	117.1119	'GEN525561 1-TOLK GEN #1 24 KV'
13G	03ALL	'TO->FROM'	'CLEARWATER - MILAN TAP 138KV CKT 1'	110	110	0.03608	117.1119	'GEN525561 1-TOLK GEN #1 24 KV'
13G	03ALL	'TO->FROM'	'GREENSBURG - SSTARTP3 115.00 115KV CKT 1	120.7	129.5	0.17753	100.8466	'GEN525561 1-TOLK GEN #1 24 KV'
13G	03ALL	'TO->FROM'	'GREENSBURG - SSTARTP3 115.00 115KV CKT 1	120.7	129.5	0.04472	100.8466	'GEN525561 1-TOLK GEN #1 24 KV'
13G	03ALL	'TO->FROM'	'GREENSBURG - SSTARTP3 115.00 115KV CKT 1	120.7	129.5	0.04472	100.8466	'GEN525561 1-TOLK GEN #1 24 KV'
13G	03ALL	'TO->FROM'	'GREENSBURG - SSTARTP3 115.00 115KV CKT 1	120.7	129.5	0.39904	100.8466	'GEN525561 1-TOLK GEN #1 24 KV'
13G	03ALL	'TO->FROM'	'GREENSBURG - SSTARTP3 115.00 115KV CKT 1	120.7	129.5	0.0299	100.8466	'GEN525561 1-TOLK GEN #1 24 KV'
13G	03ALL	'TO->FROM'	'GREENSBURG - SSTARTP3 115.00 115KV CKT 1	120.7	129.5	0.03411	100.8466	'GEN525561 1-TOLK GEN #1 24 KV'
13G	03ALL	'TO->FROM'	'GREENSBURG - SSTARTP3 115.00 115KV CKT 1	120.7	129.5	0.03411	100.8466	'GEN525561 1-TOLK GEN #1 24 KV'
13G	03ALL	'TO->FROM'	'GREENSBURG - SSTARTP3 115.00 115KV CKT 1	120.7	129.5	0.02996	100.8466	'GEN525561 1-TOLK GEN #1 24 KV'
13G	03ALL	'TO->FROM'	'GREENSBURG - SSTARTP3 115.00 115KV CKT 1	120.7	129.5	0.03691	100.8466	'GEN525561 1-TOLK GEN #1 24 KV'
13G	03ALL	'TO->FROM'	'GREENSBURG - SSTARTP3 115.00 115KV CKT 1	120.7	129.5	0.03126	100.8466	'GEN525561 1-TOLK GEN #1 24 KV'
13G	03ALL	'FROM->TO'	'HARPER - MILAN TAP 138KV CKT 1'	95.6	95.6	0.03559	142.1523	'GEN525561 1-TOLK GEN #1 24 KV'
13G	03ALL	'FROM->TO'	'HARPER - MILAN TAP 138KV CKT 1'	95.6	95.6	0.06218	142.1523	'GEN525561 1-TOLK GEN #1 24 KV'
13G	03ALL	'FROM->TO'	'HARPER - MILAN TAP 138KV CKT 1'	95.6	95.6	0.10851	142.1523	'GEN525561 1-TOLK GEN #1 24 KV'
13G	03ALL	'FROM->TO'	'HARPER - MILAN TAP 138KV CKT 1'	95.6	95.6	0.04844	142.1523	'GEN525561 1-TOLK GEN #1 24 KV'
13G	03ALL	'FROM->TO'	'HARPER - MILAN TAP 138KV CKT 1'	95.6	95.6	0.04844	142.1523	'GEN525561 1-TOLK GEN #1 24 KV'
13G	03ALL	'FROM->TO'	'HARPER - MILAN TAP 138KV CKT 1'	95.6	95.6	0.2104	142.1523	'GEN525561 1-TOLK GEN #1 24 KV'
13G	03ALL	'FROM->TO'	'HARPER - MILAN TAP 138KV CKT 1'	95.6	95.6	0.03753	142.1523	'GEN525561 1-TOLK GEN #1 24 KV'
13G	03ALL	'FROM->TO'	'HARPER - MILAN TAP 138KV CKT 1'	95.6	95.6	0.0394	142.1523	'GEN525561 1-TOLK GEN #1 24 KV'
13G	03ALL	'FROM->TO'	'HARPER - MILAN TAP 138KV CKT 1'	95.6	95.6	0.0394	142.1523	'GEN525561 1-TOLK GEN #1 24 KV'
13G	03ALL	'FROM->TO'	'HARPER - MILAN TAP 138KV CKT 1'	95.6	95.6	0.52726	142.1523	'GEN525561 1-TOLK GEN #1 24 KV'
13G	03ALL	'FROM->TO'	'HARPER - MILAN TAP 138KV CKT 1'	95.6	95.6	0.03696	142.1523	'GEN525561 1-TOLK GEN #1 24 KV'
13G	03ALL	'FROM->TO'	'HARPER - MILAN TAP 138KV CKT 1'	95.6	95.6	0.04265	142.1523	'GEN525561 1-TOLK GEN #1 24 KV'
13G	03ALL	'FROM->TO'	'HARPER - MILAN TAP 138KV CKT 1'	95.6	95.6	0.03608	142.1523	'GEN525561 1-TOLK GEN #1 24 KV'
13G	03ALL	'TO->FROM'	'CLEARWATER - MILAN TAP 138KV CKT 1'	110	110	0.03559	117.0681	'GEN525562 1-TOLK GEN #2 24 KV'
13G	03ALL	'TO->FROM'	'CLEARWATER - MILAN TAP 138KV CKT 1'	110	110	0.06218	117.0681	'GEN525562 1-TOLK GEN #2 24 KV'
13G	03ALL	'TO->FROM'	'CLEARWATER - MILAN TAP 138KV CKT 1'	110	110	0.10851	117.0681	'GEN525562 1-TOLK GEN #2 24 KV'
13G	03ALL	'TO->FROM'	'CLEARWATER - MILAN TAP 138KV CKT 1'	110	110	0.04844	117.0681	'GEN525562 1-TOLK GEN #2 24 KV'
13G	03ALL	'TO->FROM'	'CLEARWATER - MILAN TAP 138KV CKT 1'	110	110	0.04844	117.0681	'GEN525562 1-TOLK GEN #2 24 KV'
13G	03ALL	'TO->FROM'	'CLEARWATER - MILAN TAP 138KV CKT 1'	110	110	0.2104	117.0681	'GEN525562 1-TOLK GEN #2 24 KV'
13G	03ALL	'TO->FROM'	'CLEARWATER - MILAN TAP 138KV CKT 1'	110	110	0.03753	117.0681	'GEN525562 1-TOLK GEN #2 24 KV'
13G	03ALL	'TO->FROM'	'CLEARWATER - MILAN TAP 138KV CKT 1'	110	110	0.0394	117.0681	'GEN525562 1-TOLK GEN #2 24 KV'
13G	03ALL	'TO->FROM'	'CLEARWATER - MILAN TAP 138KV CKT 1'	110	110	0.0394	117.0681	'GEN525562 1-TOLK GEN #2 24 KV'
13G	03ALL	'TO->FROM'	'CLEARWATER - MILAN TAP 138KV CKT 1'	110	110	0.52726	117.0681	'GEN525562 1-TOLK GEN #2 24 KV'
13G	03ALL	'TO->FROM'	'CLEARWATER - MILAN TAP 138KV CKT 1'	110	110	0.03696	117.0681	'GEN525562 1-TOLK GEN #2 24 KV'
13G	03ALL	'TO->FROM'	'CLEARWATER - MILAN TAP 138KV CKT 1'	110	110	0.04265	117.0681	'GEN525562 1-TOLK GEN #2 24 KV'
13G	03ALL	'TO->FROM'	'CLEARWATER - MILAN TAP 138KV CKT 1'	110	110	0.03608	117.0681	'GEN525562 1-TOLK GEN #2 24 KV'
13G	03ALL	'TO->FROM'	'GREENSBURG - SSTARTP3 115.00 115KV CKT 1	120.7	129.5	0.17753	100.8009	'GEN525562 1-TOLK GEN #2 24 KV'
13G	03ALL	'TO->FROM'	'GREENSBURG - SSTARTP3 115.00 115KV CKT 1	120.7	129.5	0.04472	100.8009	'GEN525562 1-TOLK GEN #2 24 KV'
13G	03ALL	'TO->FROM'	'GREENSBURG - SSTARTP3 115.00 115KV CKT 1	120.7	129.5	0.04472	100.8009	'GEN525562 1-TOLK GEN #2 24 KV'
13G	03ALL	'TO->FROM'	'GREENSBURG - SSTARTP3 115.00 115KV CKT 1	120.7	129.5	0.39904	100.8009	'GEN525562 1-TOLK GEN #2 24 KV'
13G	03ALL	'TO->FROM'	'GREENSBURG - SSTARTP3 115.00 115KV CKT 1	120.7	129.5	0.0299	100.8009	'GEN525562 1-TOLK GEN #2 24 KV'
13G	03ALL	'TO->FROM'	'GREENSBURG - SSTARTP3 115.00 115KV CKT 1	120.7	129.5	0.03411	100.8009	'GEN525562 1-TOLK GEN #2 24 KV'
13G	03ALL	'TO->FROM'	'GREENSBURG - SSTARTP3 115.00 115KV CKT 1	120.7	129.5	0.03411	100.8009	'GEN525562 1-TOLK GEN #2 24 KV'
13G	03ALL	'TO->FROM'	'GREENSBURG - SSTARTP3 115.00 115KV CKT 1	120.7	129.5	0.02996	100.8009	'GEN525562 1-TOLK GEN #2 24 KV'
13G	03ALL	'TO->FROM'	'GREENSBURG - SSTARTP3 115.00 115KV CKT 1	120.7	129.5	0.03691	100.8009	'GEN525562 1-TOLK GEN #2 24 KV'
13G	03ALL	'TO->FROM'	'GREENSBURG - SSTARTP3 115.00 115KV CKT 1	120.7	129.5	0.03126	100.8009	'GEN525562 1-TOLK GEN #2 24 KV'
13G	03ALL	'FROM->TO'	'HARPER - MILAN TAP 138KV CKT 1'	95.6	95.6	0.03559	142.1024	'GEN525562 1-TOLK GEN #2 24 KV'
13G	03ALL	'FROM->TO'	'HARPER - MILAN TAP 138KV CKT 1'	95.6	95.6	0.06218	142.1024	'GEN525562 1-TOLK GEN #2 24 KV'
13G	03ALL	'FROM->TO'	'HARPER - MILAN TAP 138KV CKT 1'	95.6	95.6	0.10851	142.1024	'GEN525562 1-TOLK GEN #2 24 KV'
13G	03ALL	'FROM->TO'	'HARPER - MILAN TAP 138KV CKT 1'	95.6	95.6	0.04844	142.1024	'GEN525562 1-TOLK GEN #2 24 KV'
13G	03ALL	'FROM->TO'	'HARPER - MILAN TAP 138KV CKT 1'	95.6	95.6	0.04844	142.1024	'GEN525562 1-TOLK GEN #2 24 KV'
13G	03ALL	'FROM->TO'	'HARPER - MILAN TAP 138KV CKT 1'	95.6	95.6	0.2104	142.1024	'GEN525562 1-TOLK GEN #2 24 KV'
13G	03ALL	'FROM->TO'	'HARPER - MILAN TAP 138KV CKT 1'	95.6	95.6	0.03753	142.1024	'GEN525562 1-TOLK GEN #2 24 KV'

SEASON	GROUP	DIRECTION	MONITORED ELEMENT	RATE A (MVA)	RATE B (MVA)	TDF	TC%LOADING (%MVA)	CONTINGENCY NAME
13G	03ALL	'FROM->TO'	'HARPER - MILAN TAP 138KV CKT 1'	95.6	95.6	0.0394	142.1024	'GEN525562 1-TOLK GEN #2 24 KV'
13G	03ALL	'FROM->TO'	'HARPER - MILAN TAP 138KV CKT 1'	95.6	95.6	0.0394	142.1024	'GEN525562 1-TOLK GEN #2 24 KV'
13G	03ALL	'FROM->TO'	'HARPER - MILAN TAP 138KV CKT 1'	95.6	95.6	0.52726	142.1024	'GEN525562 1-TOLK GEN #2 24 KV'
13G	03ALL	'FROM->TO'	'HARPER - MILAN TAP 138KV CKT 1'	95.6	95.6	0.03696	142.1024	'GEN525562 1-TOLK GEN #2 24 KV'
13G	03ALL	'FROM->TO'	'HARPER - MILAN TAP 138KV CKT 1'	95.6	95.6	0.04265	142.1024	'GEN525562 1-TOLK GEN #2 24 KV'
13G	03ALL	'FROM->TO'	'HARPER - MILAN TAP 138KV CKT 1'	95.6	95.6	0.03608	142.1024	'GEN525562 1-TOLK GEN #2 24 KV'
13G	03ALL	'FROM->TO'	'SMOKYHL6 230.00 - SUMMIT 230KV CKT 1'	319	319	0.18549	102.5185	'GEN526331 1-JONES GEN #1 22 KV'
13G	03ALL	'FROM->TO'	'SMOKYHL6 230.00 - SUMMIT 230KV CKT 1'	319	319	0.08979	102.5185	'GEN526331 1-JONES GEN #1 22 KV'
13G	03ALL	'FROM->TO'	'SMOKYHL6 230.00 - SUMMIT 230KV CKT 1'	319	319	0.10326	102.5185	'GEN526331 1-JONES GEN #1 22 KV'
13G	03ALL	'FROM->TO'	'SMOKYHL6 230.00 - SUMMIT 230KV CKT 1'	319	319	0.12225	102.5185	'GEN526331 1-JONES GEN #1 22 KV'
13G	03ALL	'FROM->TO'	'SMOKYHL6 230.00 - SUMMIT 230KV CKT 1'	319	319	0.12225	102.5185	'GEN526331 1-JONES GEN #1 22 KV'
13G	03ALL	'FROM->TO'	'SMOKYHL6 230.00 - SUMMIT 230KV CKT 1'	319	319	0.07803	102.5185	'GEN526331 1-JONES GEN #1 22 KV'
13G	03ALL	'FROM->TO'	'SMOKYHL6 230.00 - SUMMIT 230KV CKT 1'	319	319	0.09991	102.5185	'GEN526331 1-JONES GEN #1 22 KV'
13G	03ALL	'FROM->TO'	'SMOKYHL6 230.00 - SUMMIT 230KV CKT 1'	319	319	0.11509	102.5185	'GEN526331 1-JONES GEN #1 22 KV'
13G	03ALL	'FROM->TO'	'SMOKYHL6 230.00 - SUMMIT 230KV CKT 1'	319	319	0.11509	102.5185	'GEN526331 1-JONES GEN #1 22 KV'
13G	03ALL	'FROM->TO'	'SMOKYHL6 230.00 - SUMMIT 230KV CKT 1'	319	319	0.62637	102.5185	'GEN526331 1-JONES GEN #1 22 KV'
13G	03ALL	'FROM->TO'	'SMOKYHL6 230.00 - SUMMIT 230KV CKT 1'	319	319	0.09991	102.5185	'GEN526331 1-JONES GEN #1 22 KV'
13G	03ALL	'FROM->TO'	'SMOKYHL6 230.00 - SUMMIT 230KV CKT 1'	319	319	0.1274	102.5185	'GEN526331 1-JONES GEN #1 22 KV'
13G	03ALL	'FROM->TO'	'SMOKYHL6 230.00 - SUMMIT 230KV CKT 1'	319	319	0.10261	102.5185	'GEN526331 1-JONES GEN #1 22 KV'
13G	03ALL	'TO->FROM'	'GREENSBURG - SSTARTP3 115.00 115KV CKT 1	120.7	129.5	0.17753	104.4068	'GEN526331 1-JONES GEN #1 22 KV'
13G	03ALL	'TO->FROM'	'GREENSBURG - SSTARTP3 115.00 115KV CKT 1	120.7	129.5	0.04472	104.4068	'GEN526331 1-JONES GEN #1 22 KV'
13G	03ALL	'TO->FROM'	'GREENSBURG - SSTARTP3 115.00 115KV CKT 1	120.7	129.5	0.04472	104.4068	'GEN526331 1-JONES GEN #1 22 KV'
13G	03ALL	'TO->FROM'	'GREENSBURG - SSTARTP3 115.00 115KV CKT 1	120.7	129.5	0.39904	104.4068	'GEN526331 1-JONES GEN #1 22 KV'
13G	03ALL	'TO->FROM'	'GREENSBURG - SSTARTP3 115.00 115KV CKT 1	120.7	129.5	0.0299	104.4068	'GEN526331 1-JONES GEN #1 22 KV'
13G	03ALL	'TO->FROM'	'GREENSBURG - SSTARTP3 115.00 115KV CKT 1	120.7	129.5	0.03411	104.4068	'GEN526331 1-JONES GEN #1 22 KV'
13G	03ALL	'TO->FROM'	'GREENSBURG - SSTARTP3 115.00 115KV CKT 1	120.7	129.5	0.03411	104.4068	'GEN526331 1-JONES GEN #1 22 KV'
13G	03ALL	'TO->FROM'	'GREENSBURG - SSTARTP3 115.00 115KV CKT 1	120.7	129.5	0.02996	104.4068	'GEN526331 1-JONES GEN #1 22 KV'
13G	03ALL	'TO->FROM'	'GREENSBURG - SSTARTP3 115.00 115KV CKT 1	120.7	129.5	0.03691	104.4068	'GEN526331 1-JONES GEN #1 22 KV'
13G	03ALL	'TO->FROM'	'GREENSBURG - SSTARTP3 115.00 115KV CKT 1	120.7	129.5	0.03126	104.4068	'GEN526331 1-JONES GEN #1 22 KV'
13G	03ALL	'FROM->TO'	'SMOKYHL6 230.00 - SUMMIT 230KV CKT 1'	319	319	0.18549	102.5157	'GEN526332 1-JONES GEN #2 21 KV'
13G	03ALL	'FROM->TO'	'SMOKYHL6 230.00 - SUMMIT 230KV CKT 1'	319	319	0.08979	102.5157	'GEN526332 1-JONES GEN #2 21 KV'
13G	03ALL	'FROM->TO'	'SMOKYHL6 230.00 - SUMMIT 230KV CKT 1'	319	319	0.10326	102.5157	'GEN526332 1-JONES GEN #2 21 KV'
13G	03ALL	'FROM->TO'	'SMOKYHL6 230.00 - SUMMIT 230KV CKT 1'	319	319	0.12225	102.5157	'GEN526332 1-JONES GEN #2 21 KV'
13G	03ALL	'FROM->TO'	'SMOKYHL6 230.00 - SUMMIT 230KV CKT 1'	319	319	0.12225	102.5157	'GEN526332 1-JONES GEN #2 21 KV'
13G	03ALL	'FROM->TO'	'SMOKYHL6 230.00 - SUMMIT 230KV CKT 1'	319	319	0.07803	102.5157	'GEN526332 1-JONES GEN #2 21 KV'
13G	03ALL	'FROM->TO'	'SMOKYHL6 230.00 - SUMMIT 230KV CKT 1'	319	319	0.09991	102.5157	'GEN526332 1-JONES GEN #2 21 KV'
13G	03ALL	'FROM->TO'	'SMOKYHL6 230.00 - SUMMIT 230KV CKT 1'	319	319	0.11509	102.5157	'GEN526332 1-JONES GEN #2 21 KV'
13G	03ALL	'FROM->TO'	'SMOKYHL6 230.00 - SUMMIT 230KV CKT 1'	319	319	0.11509	102.5157	'GEN526332 1-JONES GEN #2 21 KV'
13G	03ALL	'FROM->TO'	'SMOKYHL6 230.00 - SUMMIT 230KV CKT 1'	319	319	0.62637	102.5157	'GEN526332 1-JONES GEN #2 21 KV'
13G	03ALL	'FROM->TO'	'SMOKYHL6 230.00 - SUMMIT 230KV CKT 1'	319	319	0.09991	102.5157	'GEN526332 1-JONES GEN #2 21 KV'
13G	03ALL	'FROM->TO'	'SMOKYHL6 230.00 - SUMMIT 230KV CKT 1'	319	319	0.1274	102.5157	'GEN526332 1-JONES GEN #2 21 KV'
13G	03ALL	'FROM->TO'	'SMOKYHL6 230.00 - SUMMIT 230KV CKT 1'	319	319	0.10261	102.5157	'GEN526332 1-JONES GEN #2 21 KV'
13G	03ALL	'TO->FROM'	'GREENSBURG - SSTARTP3 115.00 115KV CKT 1	120.7	129.5	0.17753	104.4044	'GEN526332 1-JONES GEN #2 21 KV'
13G	03ALL	'TO->FROM'	'GREENSBURG - SSTARTP3 115.00 115KV CKT 1	120.7	129.5	0.04472	104.4044	'GEN526332 1-JONES GEN #2 21 KV'
13G	03ALL	'TO->FROM'	'GREENSBURG - SSTARTP3 115.00 115KV CKT 1	120.7	129.5	0.04472	104.4044	'GEN526332 1-JONES GEN #2 21 KV'
13G	03ALL	'TO->FROM'	'GREENSBURG - SSTARTP3 115.00 115KV CKT 1	120.7	129.5	0.39904	104.4044	'GEN526332 1-JONES GEN #2 21 KV'
13G	03ALL	'TO->FROM'	'GREENSBURG - SSTARTP3 115.00 115KV CKT 1	120.7	129.5	0.0299	104.4044	'GEN526332 1-JONES GEN #2 21 KV'
13G	03ALL	'TO->FROM'	'GREENSBURG - SSTARTP3 115.00 115KV CKT 1	120.7	129.5	0.03411	104.4044	'GEN526332 1-JONES GEN #2 21 KV'
13G	03ALL	'TO->FROM'	'GREENSBURG - SSTARTP3 115.00 115KV CKT 1	120.7	129.5	0.03411	104.4044	'GEN526332 1-JONES GEN #2 21 KV'
13G	03ALL	'TO->FROM'	'GREENSBURG - SSTARTP3 115.00 115KV CKT 1	120.7	129.5	0.02996	104.4044	'GEN526332 1-JONES GEN #2 21 KV'
13G	03ALL	'TO->FROM'	'GREENSBURG - SSTARTP3 115.00 115KV CKT 1	120.7	129.5	0.03691	104.4044	'GEN526332 1-JONES GEN #2 21 KV'
13G	03ALL	'TO->FROM'	'GREENSBURG - SSTARTP3 115.00 115KV CKT 1	120.7	129.5	0.03126	104.4044	'GEN526332 1-JONES GEN #2 21 KV'
13G	03ALL	'FROM->TO'	'SMOKYHL6 230.00 - SUMMIT 230KV CKT 1'	319	319	0.18549	103.3731	'GEN527161 1-MUSTANG GEN #1'
13G	03ALL	'FROM->TO'	'SMOKYHL6 230.00 - SUMMIT 230KV CKT 1'	319	319	0.08979	103.3731	'GEN527161 1-MUSTANG GEN #1'
13G	03ALL	'FROM->TO'	'SMOKYHL6 230.00 - SUMMIT 230KV CKT 1'	319	319	0.10326	103.3731	'GEN527161 1-MUSTANG GEN #1'
13G	03ALL	'FROM->TO'	'SMOKYHL6 230.00 - SUMMIT 230KV CKT 1'	319	319	0.12225	103.3731	'GEN527161 1-MUSTANG GEN #1'
13G	03ALL	'FROM->TO'	'SMOKYHL6 230.00 - SUMMIT 230KV CKT 1'	319	319	0.12225	103.3731	'GEN527161 1-MUSTANG GEN #1'
13G	03ALL	'FROM->TO'	'SMOKYHL6 230.00 - SUMMIT 230KV CKT 1'	319	319	0.07803	103.3731	'GEN527161 1-MUSTANG GEN #1'
13G	03ALL	'FROM->TO'	'SMOKYHL6 230.00 - SUMMIT 230KV CKT 1'	319	319	0.09991	103.3731	'GEN527161 1-MUSTANG GEN #1'
13G	03ALL	'FROM->TO'	'SMOKYHL6 230.00 - SUMMIT 230KV CKT 1'	319	319	0.11509	103.3731	'GEN527161 1-MUSTANG GEN #1'
13G	03ALL	'FROM->TO'	'SMOKYHL6 230.00 - SUMMIT 230KV CKT 1'	319	319	0.11509	103.3731	'GEN527161 1-MUSTANG GEN #1'
13G	03ALL	'FROM->TO'	'SMOKYHL6 230.00 - SUMMIT 230KV CKT 1'	319	319	0.62637	103.3731	'GEN527161 1-MUSTANG GEN #1'
13G	03ALL	'FROM->TO'	'SMOKYHL6 230.00 - SUMMIT 230KV CKT 1'	319	319	0.09991	103.3731	'GEN527161 1-MUSTANG GEN #1'
13G	03ALL	'FROM->TO'	'SMOKYHL6 230.00 - SUMMIT 230KV CKT 1'	319	319	0.1274	103.3731	'GEN527161 1-MUSTANG GEN #1'

SEASON	GROUP	DIRECTION	MONITORED ELEMENT	RATE A (MVA)	RATE B (MVA)	TDF	TC%LOADING (%MVA)	CONTINGENCY NAME
13G	03ALL	'FROM->TO'	'SMOKYHL6 230.00 - SUMMIT 230KV CKT 1'	319	319	0.10261	103.3731	'GEN527161 1-MUSTANG GEN #1'
13G	03ALL	'FROM->TO'	'SMOKYHL6 230.00 - SUMMIT 230KV CKT 1'	319	319	0.18549	103.3731	'GEN527162 1-MUSTANG GEN #2'
13G	03ALL	'FROM->TO'	'SMOKYHL6 230.00 - SUMMIT 230KV CKT 1'	319	319	0.08979	103.3731	'GEN527162 1-MUSTANG GEN #2'
13G	03ALL	'FROM->TO'	'SMOKYHL6 230.00 - SUMMIT 230KV CKT 1'	319	319	0.10326	103.3731	'GEN527162 1-MUSTANG GEN #2'
13G	03ALL	'FROM->TO'	'SMOKYHL6 230.00 - SUMMIT 230KV CKT 1'	319	319	0.12225	103.3731	'GEN527162 1-MUSTANG GEN #2'
13G	03ALL	'FROM->TO'	'SMOKYHL6 230.00 - SUMMIT 230KV CKT 1'	319	319	0.12225	103.3731	'GEN527162 1-MUSTANG GEN #2'
13G	03ALL	'FROM->TO'	'SMOKYHL6 230.00 - SUMMIT 230KV CKT 1'	319	319	0.07803	103.3731	'GEN527162 1-MUSTANG GEN #2'
13G	03ALL	'FROM->TO'	'SMOKYHL6 230.00 - SUMMIT 230KV CKT 1'	319	319	0.09991	103.3731	'GEN527162 1-MUSTANG GEN #2'
13G	03ALL	'FROM->TO'	'SMOKYHL6 230.00 - SUMMIT 230KV CKT 1'	319	319	0.11509	103.3731	'GEN527162 1-MUSTANG GEN #2'
13G	03ALL	'FROM->TO'	'SMOKYHL6 230.00 - SUMMIT 230KV CKT 1'	319	319	0.11509	103.3731	'GEN527162 1-MUSTANG GEN #2'
13G	03ALL	'FROM->TO'	'SMOKYHL6 230.00 - SUMMIT 230KV CKT 1'	319	319	0.62637	103.3731	'GEN527162 1-MUSTANG GEN #2'
13G	03ALL	'FROM->TO'	'SMOKYHL6 230.00 - SUMMIT 230KV CKT 1'	319	319	0.09991	103.3731	'GEN527162 1-MUSTANG GEN #2'
13G	03ALL	'FROM->TO'	'SMOKYHL6 230.00 - SUMMIT 230KV CKT 1'	319	319	0.1274	103.3731	'GEN527162 1-MUSTANG GEN #2'
13G	03ALL	'FROM->TO'	'SMOKYHL6 230.00 - SUMMIT 230KV CKT 1'	319	319	0.10261	103.3731	'GEN527162 1-MUSTANG GEN #2'
13G	03ALL	'FROM->TO'	'SMOKYHL6 230.00 - SUMMIT 230KV CKT 1'	319	319	0.18549	102.9326	'GEN527882 1-CUNNINGHAM GEN #2 20 KV'
13G	03ALL	'FROM->TO'	'SMOKYHL6 230.00 - SUMMIT 230KV CKT 1'	319	319	0.08979	102.9326	'GEN527882 1-CUNNINGHAM GEN #2 20 KV'
13G	03ALL	'FROM->TO'	'SMOKYHL6 230.00 - SUMMIT 230KV CKT 1'	319	319	0.10326	102.9326	'GEN527882 1-CUNNINGHAM GEN #2 20 KV'
13G	03ALL	'FROM->TO'	'SMOKYHL6 230.00 - SUMMIT 230KV CKT 1'	319	319	0.12225	102.9326	'GEN527882 1-CUNNINGHAM GEN #2 20 KV'
13G	03ALL	'FROM->TO'	'SMOKYHL6 230.00 - SUMMIT 230KV CKT 1'	319	319	0.12225	102.9326	'GEN527882 1-CUNNINGHAM GEN #2 20 KV'
13G	03ALL	'FROM->TO'	'SMOKYHL6 230.00 - SUMMIT 230KV CKT 1'	319	319	0.07803	102.9326	'GEN527882 1-CUNNINGHAM GEN #2 20 KV'
13G	03ALL	'FROM->TO'	'SMOKYHL6 230.00 - SUMMIT 230KV CKT 1'	319	319	0.09991	102.9326	'GEN527882 1-CUNNINGHAM GEN #2 20 KV'
13G	03ALL	'FROM->TO'	'SMOKYHL6 230.00 - SUMMIT 230KV CKT 1'	319	319	0.11509	102.9326	'GEN527882 1-CUNNINGHAM GEN #2 20 KV'
13G	03ALL	'FROM->TO'	'SMOKYHL6 230.00 - SUMMIT 230KV CKT 1'	319	319	0.11509	102.9326	'GEN527882 1-CUNNINGHAM GEN #2 20 KV'
13G	03ALL	'FROM->TO'	'SMOKYHL6 230.00 - SUMMIT 230KV CKT 1'	319	319	0.62637	102.9326	'GEN527882 1-CUNNINGHAM GEN #2 20 KV'
13G	03ALL	'FROM->TO'	'SMOKYHL6 230.00 - SUMMIT 230KV CKT 1'	319	319	0.09991	102.9326	'GEN527882 1-CUNNINGHAM GEN #2 20 KV'
13G	03ALL	'FROM->TO'	'SMOKYHL6 230.00 - SUMMIT 230KV CKT 1'	319	319	0.1274	102.9326	'GEN527882 1-CUNNINGHAM GEN #2 20 KV'
13G	03ALL	'FROM->TO'	'SMOKYHL6 230.00 - SUMMIT 230KV CKT 1'	319	319	0.10261	102.9326	'GEN527882 1-CUNNINGHAM GEN #2 20 KV'
13G	03ALL	'FROM->TO'	'SMOKYHL6 230.00 - SUMMIT 230KV CKT 1'	319	319	0.18549	103.4637	'GEN527901 1-HOBBS PLANT #1 (CT)'
13G	03ALL	'FROM->TO'	'SMOKYHL6 230.00 - SUMMIT 230KV CKT 1'	319	319	0.08979	103.4637	'GEN527901 1-HOBBS PLANT #1 (CT)'
13G	03ALL	'FROM->TO'	'SMOKYHL6 230.00 - SUMMIT 230KV CKT 1'	319	319	0.10326	103.4637	'GEN527901 1-HOBBS PLANT #1 (CT)'
13G	03ALL	'FROM->TO'	'SMOKYHL6 230.00 - SUMMIT 230KV CKT 1'	319	319	0.12225	103.4637	'GEN527901 1-HOBBS PLANT #1 (CT)'
13G	03ALL	'FROM->TO'	'SMOKYHL6 230.00 - SUMMIT 230KV CKT 1'	319	319	0.12225	103.4637	'GEN527901 1-HOBBS PLANT #1 (CT)'
13G	03ALL	'FROM->TO'	'SMOKYHL6 230.00 - SUMMIT 230KV CKT 1'	319	319	0.07803	103.4637	'GEN527901 1-HOBBS PLANT #1 (CT)'
13G	03ALL	'FROM->TO'	'SMOKYHL6 230.00 - SUMMIT 230KV CKT 1'	319	319	0.09991	103.4637	'GEN527901 1-HOBBS PLANT #1 (CT)'
13G	03ALL	'FROM->TO'	'SMOKYHL6 230.00 - SUMMIT 230KV CKT 1'	319	319	0.11509	103.4637	'GEN527901 1-HOBBS PLANT #1 (CT)'
13G	03ALL	'FROM->TO'	'SMOKYHL6 230.00 - SUMMIT 230KV CKT 1'	319	319	0.11509	103.4637	'GEN527901 1-HOBBS PLANT #1 (CT)'
13G	03ALL	'FROM->TO'	'SMOKYHL6 230.00 - SUMMIT 230KV CKT 1'	319	319	0.62637	103.4637	'GEN527901 1-HOBBS PLANT #1 (CT)'
13G	03ALL	'FROM->TO'	'SMOKYHL6 230.00 - SUMMIT 230KV CKT 1'	319	319	0.09991	103.4637	'GEN527901 1-HOBBS PLANT #1 (CT)'
13G	03ALL	'FROM->TO'	'SMOKYHL6 230.00 - SUMMIT 230KV CKT 1'	319	319	0.1274	103.4637	'GEN527901 1-HOBBS PLANT #1 (CT)'
13G	03ALL	'FROM->TO'	'SMOKYHL6 230.00 - SUMMIT 230KV CKT 1'	319	319	0.10261	103.4637	'GEN527901 1-HOBBS PLANT #1 (CT)'
13G	03ALL	'FROM->TO'	'SMOKYHL6 230.00 - SUMMIT 230KV CKT 1'	319	319	0.18549	103.4761	'GEN527902 1-HOBBS PLANT #2 (CT)'
13G	03ALL	'FROM->TO'	'SMOKYHL6 230.00 - SUMMIT 230KV CKT 1'	319	319	0.08979	103.4761	'GEN527902 1-HOBBS PLANT #2 (CT)'
13G	03ALL	'FROM->TO'	'SMOKYHL6 230.00 - SUMMIT 230KV CKT 1'	319	319	0.10326	103.4761	'GEN527902 1-HOBBS PLANT #2 (CT)'
13G	03ALL	'FROM->TO'	'SMOKYHL6 230.00 - SUMMIT 230KV CKT 1'	319	319	0.12225	103.4761	'GEN527902 1-HOBBS PLANT #2 (CT)'
13G	03ALL	'FROM->TO'	'SMOKYHL6 230.00 - SUMMIT 230KV CKT 1'	319	319	0.12225	103.4761	'GEN527902 1-HOBBS PLANT #2 (CT)'
13G	03ALL	'FROM->TO'	'SMOKYHL6 230.00 - SUMMIT 230KV CKT 1'	319	319	0.07803	103.4761	'GEN527902 1-HOBBS PLANT #2 (CT)'
13G	03ALL	'FROM->TO'	'SMOKYHL6 230.00 - SUMMIT 230KV CKT 1'	319	319	0.09991	103.4761	'GEN527902 1-HOBBS PLANT #2 (CT)'
13G	03ALL	'FROM->TO'	'SMOKYHL6 230.00 - SUMMIT 230KV CKT 1'	319	319	0.11509	103.4761	'GEN527902 1-HOBBS PLANT #2 (CT)'
13G	03ALL	'FROM->TO'	'SMOKYHL6 230.00 - SUMMIT 230KV CKT 1'	319	319	0.11509	103.4761	'GEN527902 1-HOBBS PLANT #2 (CT)'
13G	03ALL	'FROM->TO'	'SMOKYHL6 230.00 - SUMMIT 230KV CKT 1'	319	319	0.62637	103.4761	'GEN527902 1-HOBBS PLANT #2 (CT)'
13G	03ALL	'FROM->TO'	'SMOKYHL6 230.00 - SUMMIT 230KV CKT 1'	319	319	0.09991	103.4761	'GEN527902 1-HOBBS PLANT #2 (CT)'
13G	03ALL	'FROM->TO'	'SMOKYHL6 230.00 - SUMMIT 230KV CKT 1'	319	319	0.1274	103.4761	'GEN527902 1-HOBBS PLANT #2 (CT)'
13G	03ALL	'FROM->TO'	'SMOKYHL6 230.00 - SUMMIT 230KV CKT 1'	319	319	0.10261	103.4761	'GEN527902 1-HOBBS PLANT #2 (CT)'
13G	03ALL	'FROM->TO'	'SMOKYHL6 230.00 - SUMMIT 230KV CKT 1'	319	319	0.18549	102.6205	'GEN527903 1-HOBBS PLANT #3 (ST)'
13G	03ALL	'FROM->TO'	'SMOKYHL6 230.00 - SUMMIT 230KV CKT 1'	319	319	0.08979	102.6205	'GEN527903 1-HOBBS PLANT #3 (ST)'
13G	03ALL	'FROM->TO'	'SMOKYHL6 230.00 - SUMMIT 230KV CKT 1'	319	319	0.10326	102.6205	'GEN527903 1-HOBBS PLANT #3 (ST)'
13G	03ALL	'FROM->TO'	'SMOKYHL6 230.00 - SUMMIT 230KV CKT 1'	319	319	0.12225	102.6205	'GEN527903 1-HOBBS PLANT #3 (ST)'
13G	03ALL	'FROM->TO'	'SMOKYHL6 230.00 - SUMMIT 230KV CKT 1'	319	319	0.12225	102.6205	'GEN527903 1-HOBBS PLANT #3 (ST)'
13G	03ALL	'FROM->TO'	'SMOKYHL6 230.00 - SUMMIT 230KV CKT 1'	319	319	0.07803	102.6205	'GEN527903 1-HOBBS PLANT #3 (ST)'
13G	03ALL	'FROM->TO'	'SMOKYHL6 230.00 - SUMMIT 230KV CKT 1'	319	319	0.09991	102.6205	'GEN527903 1-HOBBS PLANT #3 (ST)'
13G	03ALL	'FROM->TO'	'SMOKYHL6 230.00 - SUMMIT 230KV CKT 1'	319	319	0.11509	102.6205	'GEN527903 1-HOBBS PLANT #3 (ST)'
13G	03ALL	'FROM->TO'	'SMOKYHL6 230.00 - SUMMIT 230KV CKT 1'	319	319	0.11509	102.6205	'GEN527903 1-HOBBS PLANT #3 (ST)'
13G	03ALL	'FROM->TO'	'SMOKYHL6 230.00 - SUMMIT 230KV CKT 1'	319	319	0.62637	102.6205	'GEN527903 1-HOBBS PLANT #3 (ST)'
13G	03ALL	'FROM->TO'	'SMOKYHL6 230.00 - SUMMIT 230KV CKT 1'	319	319	0.09991	102.6205	'GEN527903 1-HOBBS PLANT #3 (ST)'

SEASON	GROUP	DIRECTION	MONITORED ELEMENT	RATE A (MVA)	RATE B (MVA)	TDF	TC%LOADING (%MVA)	CONTINGENCY NAME
13G	03ALL	'FROM->TO'	'SMOKYHL6 230.00 - SUMMIT 230KV CKT 1'	319	319	0.1274	102.6205	'GEN527903 1-HOBBS PLANT #3 (ST)'
13G	03ALL	'FROM->TO'	'SMOKYHL6 230.00 - SUMMIT 230KV CKT 1'	319	319	0.10261	102.6205	'GEN527903 1-HOBBS PLANT #3 (ST)'
13G	03ALL	'FROM->TO'	'SMOKYHL6 230.00 - SUMMIT 230KV CKT 1'	319	319	0.18549	103.7653	'GEN528361 1-MADDOX GEN #1'
13G	03ALL	'FROM->TO'	'SMOKYHL6 230.00 - SUMMIT 230KV CKT 1'	319	319	0.08979	103.7653	'GEN528361 1-MADDOX GEN #1'
13G	03ALL	'FROM->TO'	'SMOKYHL6 230.00 - SUMMIT 230KV CKT 1'	319	319	0.10326	103.7653	'GEN528361 1-MADDOX GEN #1'
13G	03ALL	'FROM->TO'	'SMOKYHL6 230.00 - SUMMIT 230KV CKT 1'	319	319	0.12225	103.7653	'GEN528361 1-MADDOX GEN #1'
13G	03ALL	'FROM->TO'	'SMOKYHL6 230.00 - SUMMIT 230KV CKT 1'	319	319	0.12225	103.7653	'GEN528361 1-MADDOX GEN #1'
13G	03ALL	'FROM->TO'	'SMOKYHL6 230.00 - SUMMIT 230KV CKT 1'	319	319	0.07803	103.7653	'GEN528361 1-MADDOX GEN #1'
13G	03ALL	'FROM->TO'	'SMOKYHL6 230.00 - SUMMIT 230KV CKT 1'	319	319	0.09991	103.7653	'GEN528361 1-MADDOX GEN #1'
13G	03ALL	'FROM->TO'	'SMOKYHL6 230.00 - SUMMIT 230KV CKT 1'	319	319	0.11509	103.7653	'GEN528361 1-MADDOX GEN #1'
13G	03ALL	'FROM->TO'	'SMOKYHL6 230.00 - SUMMIT 230KV CKT 1'	319	319	0.11509	103.7653	'GEN528361 1-MADDOX GEN #1'
13G	03ALL	'FROM->TO'	'SMOKYHL6 230.00 - SUMMIT 230KV CKT 1'	319	319	0.62637	103.7653	'GEN528361 1-MADDOX GEN #1'
13G	03ALL	'FROM->TO'	'SMOKYHL6 230.00 - SUMMIT 230KV CKT 1'	319	319	0.09991	103.7653	'GEN528361 1-MADDOX GEN #1'
13G	03ALL	'FROM->TO'	'SMOKYHL6 230.00 - SUMMIT 230KV CKT 1'	319	319	0.1274	103.7653	'GEN528361 1-MADDOX GEN #1'
13G	03ALL	'FROM->TO'	'SMOKYHL6 230.00 - SUMMIT 230KV CKT 1'	319	319	0.10261	103.7653	'GEN528361 1-MADDOX GEN #1'
13G	03ALL	'TO->FROM'	'CLEARWATER - MILAN TAP 138KV CKT 1'	110	110	0.03559	111.6586	'GEN531447 1-HOLCOMB GENERATOR'
13G	03ALL	'TO->FROM'	'CLEARWATER - MILAN TAP 138KV CKT 1'	110	110	0.06218	111.6586	'GEN531447 1-HOLCOMB GENERATOR'
13G	03ALL	'TO->FROM'	'CLEARWATER - MILAN TAP 138KV CKT 1'	110	110	0.10851	111.6586	'GEN531447 1-HOLCOMB GENERATOR'
13G	03ALL	'TO->FROM'	'CLEARWATER - MILAN TAP 138KV CKT 1'	110	110	0.04844	111.6586	'GEN531447 1-HOLCOMB GENERATOR'
13G	03ALL	'TO->FROM'	'CLEARWATER - MILAN TAP 138KV CKT 1'	110	110	0.04844	111.6586	'GEN531447 1-HOLCOMB GENERATOR'
13G	03ALL	'TO->FROM'	'CLEARWATER - MILAN TAP 138KV CKT 1'	110	110	0.2104	111.6586	'GEN531447 1-HOLCOMB GENERATOR'
13G	03ALL	'TO->FROM'	'CLEARWATER - MILAN TAP 138KV CKT 1'	110	110	0.03753	111.6586	'GEN531447 1-HOLCOMB GENERATOR'
13G	03ALL	'TO->FROM'	'CLEARWATER - MILAN TAP 138KV CKT 1'	110	110	0.0394	111.6586	'GEN531447 1-HOLCOMB GENERATOR'
13G	03ALL	'TO->FROM'	'CLEARWATER - MILAN TAP 138KV CKT 1'	110	110	0.0394	111.6586	'GEN531447 1-HOLCOMB GENERATOR'
13G	03ALL	'TO->FROM'	'CLEARWATER - MILAN TAP 138KV CKT 1'	110	110	0.52726	111.6586	'GEN531447 1-HOLCOMB GENERATOR'
13G	03ALL	'TO->FROM'	'CLEARWATER - MILAN TAP 138KV CKT 1'	110	110	0.03696	111.6586	'GEN531447 1-HOLCOMB GENERATOR'
13G	03ALL	'TO->FROM'	'CLEARWATER - MILAN TAP 138KV CKT 1'	110	110	0.04265	111.6586	'GEN531447 1-HOLCOMB GENERATOR'
13G	03ALL	'TO->FROM'	'CLEARWATER - MILAN TAP 138KV CKT 1'	110	110	0.03608	111.6586	'GEN531447 1-HOLCOMB GENERATOR'
13G	03ALL	'FROM->TO'	'HARPER - MILAN TAP 138KV CKT 1'	95.6	95.6	0.03559	135.9166	'GEN531447 1-HOLCOMB GENERATOR'
13G	03ALL	'FROM->TO'	'HARPER - MILAN TAP 138KV CKT 1'	95.6	95.6	0.06218	135.9166	'GEN531447 1-HOLCOMB GENERATOR'
13G	03ALL	'FROM->TO'	'HARPER - MILAN TAP 138KV CKT 1'	95.6	95.6	0.10851	135.9166	'GEN531447 1-HOLCOMB GENERATOR'
13G	03ALL	'FROM->TO'	'HARPER - MILAN TAP 138KV CKT 1'	95.6	95.6	0.04844	135.9166	'GEN531447 1-HOLCOMB GENERATOR'
13G	03ALL	'FROM->TO'	'HARPER - MILAN TAP 138KV CKT 1'	95.6	95.6	0.04844	135.9166	'GEN531447 1-HOLCOMB GENERATOR'
13G	03ALL	'FROM->TO'	'HARPER - MILAN TAP 138KV CKT 1'	95.6	95.6	0.2104	135.9166	'GEN531447 1-HOLCOMB GENERATOR'
13G	03ALL	'FROM->TO'	'HARPER - MILAN TAP 138KV CKT 1'	95.6	95.6	0.03753	135.9166	'GEN531447 1-HOLCOMB GENERATOR'
13G	03ALL	'FROM->TO'	'HARPER - MILAN TAP 138KV CKT 1'	95.6	95.6	0.0394	135.9166	'GEN531447 1-HOLCOMB GENERATOR'
13G	03ALL	'FROM->TO'	'HARPER - MILAN TAP 138KV CKT 1'	95.6	95.6	0.0394	135.9166	'GEN531447 1-HOLCOMB GENERATOR'
13G	03ALL	'FROM->TO'	'HARPER - MILAN TAP 138KV CKT 1'	95.6	95.6	0.52726	135.9166	'GEN531447 1-HOLCOMB GENERATOR'
13G	03ALL	'FROM->TO'	'HARPER - MILAN TAP 138KV CKT 1'	95.6	95.6	0.03696	135.9166	'GEN531447 1-HOLCOMB GENERATOR'
13G	03ALL	'FROM->TO'	'HARPER - MILAN TAP 138KV CKT 1'	95.6	95.6	0.04265	135.9166	'GEN531447 1-HOLCOMB GENERATOR'
13G	03ALL	'FROM->TO'	'HARPER - MILAN TAP 138KV CKT 1'	95.6	95.6	0.03608	135.9166	'GEN531447 1-HOLCOMB GENERATOR'
13G	03ALL	'FROM->TO'	'SMOKYHL6 230.00 - SUMMIT 230KV CKT 1'	319	319	0.18549	101.9826	'GEN531495 1-CNTRLPLWG1 0.6900'
13G	03ALL	'FROM->TO'	'SMOKYHL6 230.00 - SUMMIT 230KV CKT 1'	319	319	0.08979	101.9826	'GEN531495 1-CNTRLPLWG1 0.6900'
13G	03ALL	'FROM->TO'	'SMOKYHL6 230.00 - SUMMIT 230KV CKT 1'	319	319	0.10326	101.9826	'GEN531495 1-CNTRLPLWG1 0.6900'
13G	03ALL	'FROM->TO'	'SMOKYHL6 230.00 - SUMMIT 230KV CKT 1'	319	319	0.12225	101.9826	'GEN531495 1-CNTRLPLWG1 0.6900'
13G	03ALL	'FROM->TO'	'SMOKYHL6 230.00 - SUMMIT 230KV CKT 1'	319	319	0.12225	101.9826	'GEN531495 1-CNTRLPLWG1 0.6900'
13G	03ALL	'FROM->TO'	'SMOKYHL6 230.00 - SUMMIT 230KV CKT 1'	319	319	0.07803	101.9826	'GEN531495 1-CNTRLPLWG1 0.6900'
13G	03ALL	'FROM->TO'	'SMOKYHL6 230.00 - SUMMIT 230KV CKT 1'	319	319	0.09991	101.9826	'GEN531495 1-CNTRLPLWG1 0.6900'
13G	03ALL	'FROM->TO'	'SMOKYHL6 230.00 - SUMMIT 230KV CKT 1'	319	319	0.11509	101.9826	'GEN531495 1-CNTRLPLWG1 0.6900'
13G	03ALL	'FROM->TO'	'SMOKYHL6 230.00 - SUMMIT 230KV CKT 1'	319	319	0.11509	101.9826	'GEN531495 1-CNTRLPLWG1 0.6900'
13G	03ALL	'FROM->TO'	'SMOKYHL6 230.00 - SUMMIT 230KV CKT 1'	319	319	0.62637	101.9826	'GEN531495 1-CNTRLPLWG1 0.6900'
13G	03ALL	'FROM->TO'	'SMOKYHL6 230.00 - SUMMIT 230KV CKT 1'	319	319	0.09991	101.9826	'GEN531495 1-CNTRLPLWG1 0.6900'
13G	03ALL	'FROM->TO'	'SMOKYHL6 230.00 - SUMMIT 230KV CKT 1'	319	319	0.1274	101.9826	'GEN531495 1-CNTRLPLWG1 0.6900'
13G	03ALL	'FROM->TO'	'SMOKYHL6 230.00 - SUMMIT 230KV CKT 1'	319	319	0.10261	101.9826	'GEN531495 1-CNTRLPLWG1 0.6900'
13G	03ALL	'FROM->TO'	'SMOKYHL6 230.00 - SUMMIT 230KV CKT 1'	319	319	0.18549	113.155	'GEN532651 1-JEFFREY ENERGY CENTER UNIT 1
13G	03ALL	'FROM->TO'	'SMOKYHL6 230.00 - SUMMIT 230KV CKT 1'	319	319	0.08979	113.155	'GEN532651 1-JEFFREY ENERGY CENTER UNIT 1
13G	03ALL	'FROM->TO'	'SMOKYHL6 230.00 - SUMMIT 230KV CKT 1'	319	319	0.10326	113.155	'GEN532651 1-JEFFREY ENERGY CENTER UNIT 1
13G	03ALL	'FROM->TO'	'SMOKYHL6 230.00 - SUMMIT 230KV CKT 1'	319	319	0.12225	113.155	'GEN532651 1-JEFFREY ENERGY CENTER UNIT 1
13G	03ALL	'FROM->TO'	'SMOKYHL6 230.00 - SUMMIT 230KV CKT 1'	319	319	0.12225	113.155	'GEN532651 1-JEFFREY ENERGY CENTER UNIT 1
13G	03ALL	'FROM->TO'	'SMOKYHL6 230.00 - SUMMIT 230KV CKT 1'	319	319	0.07803	113.155	'GEN532651 1-JEFFREY ENERGY CENTER UNIT 1
13G	03ALL	'FROM->TO'	'SMOKYHL6 230.00 - SUMMIT 230KV CKT 1'	319	319	0.09991	113.155	'GEN532651 1-JEFFREY ENERGY CENTER UNIT 1
13G	03ALL	'FROM->TO'	'SMOKYHL6 230.00 - SUMMIT 230KV CKT 1'	319	319	0.11509	113.155	'GEN532651 1-JEFFREY ENERGY CENTER UNIT 1
13G	03ALL	'FROM->TO'	'SMOKYHL6 230.00 - SUMMIT 230KV CKT 1'	319	319	0.11509	113.155	'GEN532651 1-JEFFREY ENERGY CENTER UNIT 1
13G	03ALL	'FROM->TO'	'SMOKYHL6 230.00 - SUMMIT 230KV CKT 1'	319	319	0.62637	113.155	'GEN532651 1-JEFFREY ENERGY CENTER UNIT 1

SEASON	GROUP	DIRECTION	MONITORED ELEMENT	RATE A (MVA)	RATE B (MVA)	TDF	TC%LOADING (%MVA)	CONTINGENCY NAME
13G	03ALL	'FROM->TO'	'SMOKYHL6 230.00 - SUMMIT 230KV CKT 1'	319	319	0.09991	113.155	'GEN532651 1-JEFFREY ENERGY CENTER UNIT 1
13G	03ALL	'FROM->TO'	'SMOKYHL6 230.00 - SUMMIT 230KV CKT 1'	319	319	0.1274	113.155	'GEN532651 1-JEFFREY ENERGY CENTER UNIT 1
13G	03ALL	'FROM->TO'	'SMOKYHL6 230.00 - SUMMIT 230KV CKT 1'	319	319	0.10261	113.155	'GEN532651 1-JEFFREY ENERGY CENTER UNIT 1
13G	03ALL	'FROM->TO'	'SMOKYHL6 230.00 - SUMMIT 230KV CKT 1'	319	319	0.18549	113.5382	'GEN532652 1-JEFFREY ENERGY CENTER UNIT 2
13G	03ALL	'FROM->TO'	'SMOKYHL6 230.00 - SUMMIT 230KV CKT 1'	319	319	0.08979	113.5382	'GEN532652 1-JEFFREY ENERGY CENTER UNIT 2
13G	03ALL	'FROM->TO'	'SMOKYHL6 230.00 - SUMMIT 230KV CKT 1'	319	319	0.10326	113.5382	'GEN532652 1-JEFFREY ENERGY CENTER UNIT 2
13G	03ALL	'FROM->TO'	'SMOKYHL6 230.00 - SUMMIT 230KV CKT 1'	319	319	0.12225	113.5382	'GEN532652 1-JEFFREY ENERGY CENTER UNIT 2
13G	03ALL	'FROM->TO'	'SMOKYHL6 230.00 - SUMMIT 230KV CKT 1'	319	319	0.12225	113.5382	'GEN532652 1-JEFFREY ENERGY CENTER UNIT 2
13G	03ALL	'FROM->TO'	'SMOKYHL6 230.00 - SUMMIT 230KV CKT 1'	319	319	0.07803	113.5382	'GEN532652 1-JEFFREY ENERGY CENTER UNIT 2
13G	03ALL	'FROM->TO'	'SMOKYHL6 230.00 - SUMMIT 230KV CKT 1'	319	319	0.09991	113.5382	'GEN532652 1-JEFFREY ENERGY CENTER UNIT 2
13G	03ALL	'FROM->TO'	'SMOKYHL6 230.00 - SUMMIT 230KV CKT 1'	319	319	0.11509	113.5382	'GEN532652 1-JEFFREY ENERGY CENTER UNIT 2
13G	03ALL	'FROM->TO'	'SMOKYHL6 230.00 - SUMMIT 230KV CKT 1'	319	319	0.11509	113.5382	'GEN532652 1-JEFFREY ENERGY CENTER UNIT 2
13G	03ALL	'FROM->TO'	'SMOKYHL6 230.00 - SUMMIT 230KV CKT 1'	319	319	0.62637	113.5382	'GEN532652 1-JEFFREY ENERGY CENTER UNIT 2
13G	03ALL	'FROM->TO'	'SMOKYHL6 230.00 - SUMMIT 230KV CKT 1'	319	319	0.09991	113.5382	'GEN532652 1-JEFFREY ENERGY CENTER UNIT 2
13G	03ALL	'FROM->TO'	'SMOKYHL6 230.00 - SUMMIT 230KV CKT 1'	319	319	0.1274	113.5382	'GEN532652 1-JEFFREY ENERGY CENTER UNIT 2
13G	03ALL	'FROM->TO'	'SMOKYHL6 230.00 - SUMMIT 230KV CKT 1'	319	319	0.10261	113.5382	'GEN532652 1-JEFFREY ENERGY CENTER UNIT 2
13G	03ALL	'FROM->TO'	'SMOKYHL6 230.00 - SUMMIT 230KV CKT 1'	319	319	0.18549	113.5371	'GEN532653 1-JEFFREY ENERGY CENTER UNIT 3
13G	03ALL	'FROM->TO'	'SMOKYHL6 230.00 - SUMMIT 230KV CKT 1'	319	319	0.08979	113.5371	'GEN532653 1-JEFFREY ENERGY CENTER UNIT 3
13G	03ALL	'FROM->TO'	'SMOKYHL6 230.00 - SUMMIT 230KV CKT 1'	319	319	0.10326	113.5371	'GEN532653 1-JEFFREY ENERGY CENTER UNIT 3
13G	03ALL	'FROM->TO'	'SMOKYHL6 230.00 - SUMMIT 230KV CKT 1'	319	319	0.12225	113.5371	'GEN532653 1-JEFFREY ENERGY CENTER UNIT 3
13G	03ALL	'FROM->TO'	'SMOKYHL6 230.00 - SUMMIT 230KV CKT 1'	319	319	0.12225	113.5371	'GEN532653 1-JEFFREY ENERGY CENTER UNIT 3
13G	03ALL	'FROM->TO'	'SMOKYHL6 230.00 - SUMMIT 230KV CKT 1'	319	319	0.07803	113.5371	'GEN532653 1-JEFFREY ENERGY CENTER UNIT 3
13G	03ALL	'FROM->TO'	'SMOKYHL6 230.00 - SUMMIT 230KV CKT 1'	319	319	0.09991	113.5371	'GEN532653 1-JEFFREY ENERGY CENTER UNIT 3
13G	03ALL	'FROM->TO'	'SMOKYHL6 230.00 - SUMMIT 230KV CKT 1'	319	319	0.11509	113.5371	'GEN532653 1-JEFFREY ENERGY CENTER UNIT 3
13G	03ALL	'FROM->TO'	'SMOKYHL6 230.00 - SUMMIT 230KV CKT 1'	319	319	0.11509	113.5371	'GEN532653 1-JEFFREY ENERGY CENTER UNIT 3
13G	03ALL	'FROM->TO'	'SMOKYHL6 230.00 - SUMMIT 230KV CKT 1'	319	319	0.62637	113.5371	'GEN532653 1-JEFFREY ENERGY CENTER UNIT 3
13G	03ALL	'FROM->TO'	'SMOKYHL6 230.00 - SUMMIT 230KV CKT 1'	319	319	0.09991	113.5371	'GEN532653 1-JEFFREY ENERGY CENTER UNIT 3
13G	03ALL	'FROM->TO'	'SMOKYHL6 230.00 - SUMMIT 230KV CKT 1'	319	319	0.1274	113.5371	'GEN532653 1-JEFFREY ENERGY CENTER UNIT 3
13G	03ALL	'FROM->TO'	'SMOKYHL6 230.00 - SUMMIT 230KV CKT 1'	319	319	0.10261	113.5371	'GEN532653 1-JEFFREY ENERGY CENTER UNIT 3
13G	03ALL	'FROM->TO'	'SMOKYHL6 230.00 - SUMMIT 230KV CKT 1'	319	319	0.18549	108.1677	'GEN532663 1-LAWRENCE ENERGY CENTER UNIT 5
13G	03ALL	'FROM->TO'	'SMOKYHL6 230.00 - SUMMIT 230KV CKT 1'	319	319	0.08979	108.1677	'GEN532663 1-LAWRENCE ENERGY CENTER UNIT 5
13G	03ALL	'FROM->TO'	'SMOKYHL6 230.00 - SUMMIT 230KV CKT 1'	319	319	0.10326	108.1677	'GEN532663 1-LAWRENCE ENERGY CENTER UNIT 5
13G	03ALL	'FROM->TO'	'SMOKYHL6 230.00 - SUMMIT 230KV CKT 1'	319	319	0.12225	108.1677	'GEN532663 1-LAWRENCE ENERGY CENTER UNIT 5
13G	03ALL	'FROM->TO'	'SMOKYHL6 230.00 - SUMMIT 230KV CKT 1'	319	319	0.12225	108.1677	'GEN532663 1-LAWRENCE ENERGY CENTER UNIT 5
13G	03ALL	'FROM->TO'	'SMOKYHL6 230.00 - SUMMIT 230KV CKT 1'	319	319	0.07803	108.1677	'GEN532663 1-LAWRENCE ENERGY CENTER UNIT 5
13G	03ALL	'FROM->TO'	'SMOKYHL6 230.00 - SUMMIT 230KV CKT 1'	319	319	0.09991	108.1677	'GEN532663 1-LAWRENCE ENERGY CENTER UNIT 5
13G	03ALL	'FROM->TO'	'SMOKYHL6 230.00 - SUMMIT 230KV CKT 1'	319	319	0.11509	108.1677	'GEN532663 1-LAWRENCE ENERGY CENTER UNIT 5
13G	03ALL	'FROM->TO'	'SMOKYHL6 230.00 - SUMMIT 230KV CKT 1'	319	319	0.11509	108.1677	'GEN532663 1-LAWRENCE ENERGY CENTER UNIT 5
13G	03ALL	'FROM->TO'	'SMOKYHL6 230.00 - SUMMIT 230KV CKT 1'	319	319	0.62637	108.1677	'GEN532663 1-LAWRENCE ENERGY CENTER UNIT 5
13G	03ALL	'FROM->TO'	'SMOKYHL6 230.00 - SUMMIT 230KV CKT 1'	319	319	0.09991	108.1677	'GEN532663 1-LAWRENCE ENERGY CENTER UNIT 5
13G	03ALL	'FROM->TO'	'SMOKYHL6 230.00 - SUMMIT 230KV CKT 1'	319	319	0.1274	108.1677	'GEN532663 1-LAWRENCE ENERGY CENTER UNIT 5
13G	03ALL	'FROM->TO'	'SMOKYHL6 230.00 - SUMMIT 230KV CKT 1'	319	319	0.10261	108.1677	'GEN532663 1-LAWRENCE ENERGY CENTER UNIT 5
13G	03ALL	'FROM->TO'	'SMOKYHL6 230.00 - SUMMIT 230KV CKT 1'	319	319	0.18549	106.3322	'GEN532672 1-TECUMSEH ENERGY CENTER UNIT 8
13G	03ALL	'FROM->TO'	'SMOKYHL6 230.00 - SUMMIT 230KV CKT 1'	319	319	0.08979	106.3322	'GEN532672 1-TECUMSEH ENERGY CENTER UNIT 8
13G	03ALL	'FROM->TO'	'SMOKYHL6 230.00 - SUMMIT 230KV CKT 1'	319	319	0.10326	106.3322	'GEN532672 1-TECUMSEH ENERGY CENTER UNIT 8
13G	03ALL	'FROM->TO'	'SMOKYHL6 230.00 - SUMMIT 230KV CKT 1'	319	319	0.12225	106.3322	'GEN532672 1-TECUMSEH ENERGY CENTER UNIT 8
13G	03ALL	'FROM->TO'	'SMOKYHL6 230.00 - SUMMIT 230KV CKT 1'	319	319	0.12225	106.3322	'GEN532672 1-TECUMSEH ENERGY CENTER UNIT 8
13G	03ALL	'FROM->TO'	'SMOKYHL6 230.00 - SUMMIT 230KV CKT 1'	319	319	0.07803	106.3322	'GEN532672 1-TECUMSEH ENERGY CENTER UNIT 8
13G	03ALL	'FROM->TO'	'SMOKYHL6 230.00 - SUMMIT 230KV CKT 1'	319	319	0.09991	106.3322	'GEN532672 1-TECUMSEH ENERGY CENTER UNIT 8
13G	03ALL	'FROM->TO'	'SMOKYHL6 230.00 - SUMMIT 230KV CKT 1'	319	319	0.11509	106.3322	'GEN532672 1-TECUMSEH ENERGY CENTER UNIT 8
13G	03ALL	'FROM->TO'	'SMOKYHL6 230.00 - SUMMIT 230KV CKT 1'	319	319	0.11509	106.3322	'GEN532672 1-TECUMSEH ENERGY CENTER UNIT 8
13G	03ALL	'FROM->TO'	'SMOKYHL6 230.00 - SUMMIT 230KV CKT 1'	319	319	0.62637	106.3322	'GEN532672 1-TECUMSEH ENERGY CENTER UNIT 8
13G	03ALL	'FROM->TO'	'SMOKYHL6 230.00 - SUMMIT 230KV CKT 1'	319	319	0.09991	106.3322	'GEN532672 1-TECUMSEH ENERGY CENTER UNIT 8
13G	03ALL	'FROM->TO'	'SMOKYHL6 230.00 - SUMMIT 230KV CKT 1'	319	319	0.1274	106.3322	'GEN532672 1-TECUMSEH ENERGY CENTER UNIT 8
13G	03ALL	'FROM->TO'	'SMOKYHL6 230.00 - SUMMIT 230KV CKT 1'	319	319	0.10261	106.3322	'GEN532672 1-TECUMSEH ENERGY CENTER UNIT 8
13G	03ALL	'FROM->TO'	'SMOKYHL6 230.00 - SUMMIT 230KV CKT 1'	319	319	0.18549	108.612	'GEN532722 1-EVANS ENERGY CENTER UNIT 2
13G	03ALL	'FROM->TO'	'SMOKYHL6 230.00 - SUMMIT 230KV CKT 1'	319	319	0.08979	108.612	'GEN532722 1-EVANS ENERGY CENTER UNIT 2
13G	03ALL	'FROM->TO'	'SMOKYHL6 230.00 - SUMMIT 230KV CKT 1'	319	319	0.10326	108.612	'GEN532722 1-EVANS ENERGY CENTER UNIT 2
13G	03ALL	'FROM->TO'	'SMOKYHL6 230.00 - SUMMIT 230KV CKT 1'	319	319	0.12225	108.612	'GEN532722 1-EVANS ENERGY CENTER UNIT 2
13G	03ALL	'FROM->TO'	'SMOKYHL6 230.00 - SUMMIT 230KV CKT 1'	319	319	0.12225	108.612	'GEN532722 1-EVANS ENERGY CENTER UNIT 2
13G	03ALL	'FROM->TO'	'SMOKYHL6 230.00 - SUMMIT 230KV CKT 1'	319	319	0.07803	108.612	'GEN532722 1-EVANS ENERGY CENTER UNIT 2
13G	03ALL	'FROM->TO'	'SMOKYHL6 230.00 - SUMMIT 230KV CKT 1'	319	319	0.09991	108.612	'GEN532722 1-EVANS ENERGY CENTER UNIT 2
13G	03ALL	'FROM->TO'	'SMOKYHL6 230.00 - SUMMIT 230KV CKT 1'	319	319	0.11509	108.612	'GEN532722 1-EVANS ENERGY CENTER UNIT 2
13G	03ALL	'FROM->TO'	'SMOKYHL6 230.00 - SUMMIT 230KV CKT 1'	319	319	0.11509	108.612	'GEN532722 1-EVANS ENERGY CENTER UNIT 2

SEASON	GROUP	DIRECTION	MONITORED ELEMENT	RATE A (MVA)	RATE B (MVA)	TDF	TC%LOADING (%MVA)	CONTINGENCY NAME
13G	03ALL	'FROM->TO'	'SMOKYHL6 230.00 - SUMMIT 230KV CKT 1'	319	319	0.62637	108.612	'GEN532722 1-EVANS ENERGY CENTER UNIT 2
13G	03ALL	'FROM->TO'	'SMOKYHL6 230.00 - SUMMIT 230KV CKT 1'	319	319	0.09991	108.612	'GEN532722 1-EVANS ENERGY CENTER UNIT 2
13G	03ALL	'FROM->TO'	'SMOKYHL6 230.00 - SUMMIT 230KV CKT 1'	319	319	0.1274	108.612	'GEN532722 1-EVANS ENERGY CENTER UNIT 2
13G	03ALL	'FROM->TO'	'SMOKYHL6 230.00 - SUMMIT 230KV CKT 1'	319	319	0.10261	108.612	'GEN532722 1-EVANS ENERGY CENTER UNIT 2
13G	03ALL	'TO->FROM'	'CLEARWATER - MILAN TAP 138KV CKT 1'	110	110	0.03559	128.7913	'GEN532722 1-EVANS ENERGY CENTER UNIT 2
13G	03ALL	'TO->FROM'	'CLEARWATER - MILAN TAP 138KV CKT 1'	110	110	0.06218	128.7913	'GEN532722 1-EVANS ENERGY CENTER UNIT 2
13G	03ALL	'TO->FROM'	'CLEARWATER - MILAN TAP 138KV CKT 1'	110	110	0.10851	128.7913	'GEN532722 1-EVANS ENERGY CENTER UNIT 2
13G	03ALL	'TO->FROM'	'CLEARWATER - MILAN TAP 138KV CKT 1'	110	110	0.04844	128.7913	'GEN532722 1-EVANS ENERGY CENTER UNIT 2
13G	03ALL	'TO->FROM'	'CLEARWATER - MILAN TAP 138KV CKT 1'	110	110	0.04844	128.7913	'GEN532722 1-EVANS ENERGY CENTER UNIT 2
13G	03ALL	'TO->FROM'	'CLEARWATER - MILAN TAP 138KV CKT 1'	110	110	0.2104	128.7913	'GEN532722 1-EVANS ENERGY CENTER UNIT 2
13G	03ALL	'TO->FROM'	'CLEARWATER - MILAN TAP 138KV CKT 1'	110	110	0.03753	128.7913	'GEN532722 1-EVANS ENERGY CENTER UNIT 2
13G	03ALL	'TO->FROM'	'CLEARWATER - MILAN TAP 138KV CKT 1'	110	110	0.0394	128.7913	'GEN532722 1-EVANS ENERGY CENTER UNIT 2
13G	03ALL	'TO->FROM'	'CLEARWATER - MILAN TAP 138KV CKT 1'	110	110	0.0394	128.7913	'GEN532722 1-EVANS ENERGY CENTER UNIT 2
13G	03ALL	'TO->FROM'	'CLEARWATER - MILAN TAP 138KV CKT 1'	110	110	0.52726	128.7913	'GEN532722 1-EVANS ENERGY CENTER UNIT 2
13G	03ALL	'TO->FROM'	'CLEARWATER - MILAN TAP 138KV CKT 1'	110	110	0.03696	128.7913	'GEN532722 1-EVANS ENERGY CENTER UNIT 2
13G	03ALL	'TO->FROM'	'CLEARWATER - MILAN TAP 138KV CKT 1'	110	110	0.04265	128.7913	'GEN532722 1-EVANS ENERGY CENTER UNIT 2
13G	03ALL	'TO->FROM'	'CLEARWATER - MILAN TAP 138KV CKT 1'	110	110	0.03608	128.7913	'GEN532722 1-EVANS ENERGY CENTER UNIT 2
13G	03ALL	'FROM->TO'	'GREENSBURG - SUN CITY 115KV CKT 1'	120.7	129.5	0.17753	102.2583	'GEN532722 1-EVANS ENERGY CENTER UNIT 2
13G	03ALL	'FROM->TO'	'GREENSBURG - SUN CITY 115KV CKT 1'	120.7	129.5	0.04472	102.2583	'GEN532722 1-EVANS ENERGY CENTER UNIT 2
13G	03ALL	'FROM->TO'	'GREENSBURG - SUN CITY 115KV CKT 1'	120.7	129.5	0.04472	102.2583	'GEN532722 1-EVANS ENERGY CENTER UNIT 2
13G	03ALL	'FROM->TO'	'GREENSBURG - SUN CITY 115KV CKT 1'	120.7	129.5	0.39904	102.2583	'GEN532722 1-EVANS ENERGY CENTER UNIT 2
13G	03ALL	'FROM->TO'	'GREENSBURG - SUN CITY 115KV CKT 1'	120.7	129.5	0.0299	102.2583	'GEN532722 1-EVANS ENERGY CENTER UNIT 2
13G	03ALL	'FROM->TO'	'GREENSBURG - SUN CITY 115KV CKT 1'	120.7	129.5	0.03411	102.2583	'GEN532722 1-EVANS ENERGY CENTER UNIT 2
13G	03ALL	'FROM->TO'	'GREENSBURG - SUN CITY 115KV CKT 1'	120.7	129.5	0.03411	102.2583	'GEN532722 1-EVANS ENERGY CENTER UNIT 2
13G	03ALL	'FROM->TO'	'GREENSBURG - SUN CITY 115KV CKT 1'	120.7	129.5	0.02996	102.2583	'GEN532722 1-EVANS ENERGY CENTER UNIT 2
13G	03ALL	'FROM->TO'	'GREENSBURG - SUN CITY 115KV CKT 1'	120.7	129.5	0.03691	102.2583	'GEN532722 1-EVANS ENERGY CENTER UNIT 2
13G	03ALL	'FROM->TO'	'GREENSBURG - SUN CITY 115KV CKT 1'	120.7	129.5	0.03126	102.2583	'GEN532722 1-EVANS ENERGY CENTER UNIT 2
13G	03ALL	'TO->FROM'	'GREENSBURG - SSTARTP3 115.00 115KV CKT 1	120.7	129.5	0.17753	110.1083	'GEN532722 1-EVANS ENERGY CENTER UNIT 2
13G	03ALL	'TO->FROM'	'GREENSBURG - SSTARTP3 115.00 115KV CKT 1	120.7	129.5	0.04472	110.1083	'GEN532722 1-EVANS ENERGY CENTER UNIT 2
13G	03ALL	'TO->FROM'	'GREENSBURG - SSTARTP3 115.00 115KV CKT 1	120.7	129.5	0.04472	110.1083	'GEN532722 1-EVANS ENERGY CENTER UNIT 2
13G	03ALL	'TO->FROM'	'GREENSBURG - SSTARTP3 115.00 115KV CKT 1	120.7	129.5	0.39904	110.1083	'GEN532722 1-EVANS ENERGY CENTER UNIT 2
13G	03ALL	'TO->FROM'	'GREENSBURG - SSTARTP3 115.00 115KV CKT 1	120.7	129.5	0.0299	110.1083	'GEN532722 1-EVANS ENERGY CENTER UNIT 2
13G	03ALL	'TO->FROM'	'GREENSBURG - SSTARTP3 115.00 115KV CKT 1	120.7	129.5	0.03411	110.1083	'GEN532722 1-EVANS ENERGY CENTER UNIT 2
13G	03ALL	'TO->FROM'	'GREENSBURG - SSTARTP3 115.00 115KV CKT 1	120.7	129.5	0.03411	110.1083	'GEN532722 1-EVANS ENERGY CENTER UNIT 2
13G	03ALL	'TO->FROM'	'GREENSBURG - SSTARTP3 115.00 115KV CKT 1	120.7	129.5	0.02996	110.1083	'GEN532722 1-EVANS ENERGY CENTER UNIT 2
13G	03ALL	'TO->FROM'	'GREENSBURG - SSTARTP3 115.00 115KV CKT 1	120.7	129.5	0.03691	110.1083	'GEN532722 1-EVANS ENERGY CENTER UNIT 2
13G	03ALL	'TO->FROM'	'GREENSBURG - SSTARTP3 115.00 115KV CKT 1	120.7	129.5	0.03126	110.1083	'GEN532722 1-EVANS ENERGY CENTER UNIT 2
13G	03ALL	'FROM->TO'	'HARPER - MILAN TAP 138KV CKT 1'	95.6	95.6	0.03559	155.4911	'GEN532722 1-EVANS ENERGY CENTER UNIT 2
13G	03ALL	'FROM->TO'	'HARPER - MILAN TAP 138KV CKT 1'	95.6	95.6	0.06218	155.4911	'GEN532722 1-EVANS ENERGY CENTER UNIT 2
13G	03ALL	'FROM->TO'	'HARPER - MILAN TAP 138KV CKT 1'	95.6	95.6	0.10851	155.4911	'GEN532722 1-EVANS ENERGY CENTER UNIT 2
13G	03ALL	'FROM->TO'	'HARPER - MILAN TAP 138KV CKT 1'	95.6	95.6	0.04844	155.4911	'GEN532722 1-EVANS ENERGY CENTER UNIT 2
13G	03ALL	'FROM->TO'	'HARPER - MILAN TAP 138KV CKT 1'	95.6	95.6	0.04844	155.4911	'GEN532722 1-EVANS ENERGY CENTER UNIT 2
13G	03ALL	'FROM->TO'	'HARPER - MILAN TAP 138KV CKT 1'	95.6	95.6	0.2104	155.4911	'GEN532722 1-EVANS ENERGY CENTER UNIT 2
13G	03ALL	'FROM->TO'	'HARPER - MILAN TAP 138KV CKT 1'	95.6	95.6	0.03753	155.4911	'GEN532722 1-EVANS ENERGY CENTER UNIT 2
13G	03ALL	'FROM->TO'	'HARPER - MILAN TAP 138KV CKT 1'	95.6	95.6	0.0394	155.4911	'GEN532722 1-EVANS ENERGY CENTER UNIT 2
13G	03ALL	'FROM->TO'	'HARPER - MILAN TAP 138KV CKT 1'	95.6	95.6	0.0394	155.4911	'GEN532722 1-EVANS ENERGY CENTER UNIT 2
13G	03ALL	'FROM->TO'	'HARPER - MILAN TAP 138KV CKT 1'	95.6	95.6	0.52726	155.4911	'GEN532722 1-EVANS ENERGY CENTER UNIT 2
13G	03ALL	'FROM->TO'	'HARPER - MILAN TAP 138KV CKT 1'	95.6	95.6	0.03696	155.4911	'GEN532722 1-EVANS ENERGY CENTER UNIT 2
13G	03ALL	'FROM->TO'	'HARPER - MILAN TAP 138KV CKT 1'	95.6	95.6	0.04265	155.4911	'GEN532722 1-EVANS ENERGY CENTER UNIT 2
13G	03ALL	'FROM->TO'	'HARPER - MILAN TAP 138KV CKT 1'	95.6	95.6	0.03608	155.4911	'GEN532722 1-EVANS ENERGY CENTER UNIT 2
13G	03ALL	'FROM->TO'	'MOUNDRIDGE (MOUND10X) 138/115/13.8KV TRANSFORMER CKT 1'	100	110	0.03255	106.9466	'GEN532722 1-EVANS ENERGY CENTER UNIT 2
13G	03ALL	'FROM->TO'	'MOUNDRIDGE (MOUND10X) 138/115/13.8KV TRANSFORMER CKT 1'	100	110	0.06454	106.9466	'GEN532722 1-EVANS ENERGY CENTER UNIT 2
13G	03ALL	'FROM->TO'	'MOUNDRIDGE (MOUND10X) 138/115/13.8KV TRANSFORMER CKT 1'	100	110	0.03489	106.9466	'GEN532722 1-EVANS ENERGY CENTER UNIT 2
13G	03ALL	'FROM->TO'	'MOUNDRIDGE (MOUND10X) 138/115/13.8KV TRANSFORMER CKT 1'	100	110	0.03255	106.6829	'GEN532722 1-EVANS ENERGY CENTER UNIT 2
13G	03ALL	'FROM->TO'	'MOUNDRIDGE (MOUND10X) 138/115/13.8KV TRANSFORMER CKT 1'	100	110	0.06454	106.6829	'GEN532722 1-EVANS ENERGY CENTER UNIT 2
13G	03ALL	'FROM->TO'	'MOUNDRIDGE (MOUND10X) 138/115/13.8KV TRANSFORMER CKT 1'	100	110	0.03489	106.6829	'GEN532722 1-EVANS ENERGY CENTER UNIT 2
13G	03ALL	'FROM->TO'	'SMOKYHL6 230.00 - SUMMIT 230KV CKT 1'	319	319	0.18549	114.1079	'GEN532751 1-WOLF CREEK GENERATING STATION UNIT 1
13G	03ALL	'FROM->TO'	'SMOKYHL6 230.00 - SUMMIT 230KV CKT 1'	319	319	0.08979	114.1079	'GEN532751 1-WOLF CREEK GENERATING STATION UNIT 1
13G	03ALL	'FROM->TO'	'SMOKYHL6 230.00 - SUMMIT 230KV CKT 1'	319	319	0.10326	114.1079	'GEN532751 1-WOLF CREEK GENERATING STATION UNIT 1
13G	03ALL	'FROM->TO'	'SMOKYHL6 230.00 - SUMMIT 230KV CKT 1'	319	319	0.12225	114.1079	'GEN532751 1-WOLF CREEK GENERATING STATION UNIT 1
13G	03ALL	'FROM->TO'	'SMOKYHL6 230.00 - SUMMIT 230KV CKT 1'	319	319	0.12225	114.1079	'GEN532751 1-WOLF CREEK GENERATING STATION UNIT 1
13G	03ALL	'FROM->TO'	'SMOKYHL6 230.00 - SUMMIT 230KV CKT 1'	319	319	0.07803	114.1079	'GEN532751 1-WOLF CREEK GENERATING STATION UNIT 1
13G	03ALL	'FROM->TO'	'SMOKYHL6 230.00 - SUMMIT 230KV CKT 1'	319	319	0.09991	114.1079	'GEN532751 1-WOLF CREEK GENERATING STATION UNIT 1
13G	03ALL	'FROM->TO'	'SMOKYHL6 230.00 - SUMMIT 230KV CKT 1'	319	319	0.11509	114.1079	'GEN532751 1-WOLF CREEK GENERATING STATION UNIT 1

SEASON	GROUP	DIRECTION	MONITORED ELEMENT	RATE A (MVA)	RATE B (MVA)	TDF	TC%LOADING (%MVA)	CONTINGENCY NAME
13G	03ALL	'FROM->TO'	'SMOKYHL6 230.00 - SUMMIT 230KV CKT 1'	319	319	0.11509	114.1079	'GEN532751 1-WOLF CREEK GENERATING STATION UNIT 1
13G	03ALL	'FROM->TO'	'SMOKYHL6 230.00 - SUMMIT 230KV CKT 1'	319	319	0.62637	114.1079	'GEN532751 1-WOLF CREEK GENERATING STATION UNIT 1
13G	03ALL	'FROM->TO'	'SMOKYHL6 230.00 - SUMMIT 230KV CKT 1'	319	319	0.09991	114.1079	'GEN532751 1-WOLF CREEK GENERATING STATION UNIT 1
13G	03ALL	'FROM->TO'	'SMOKYHL6 230.00 - SUMMIT 230KV CKT 1'	319	319	0.1274	114.1079	'GEN532751 1-WOLF CREEK GENERATING STATION UNIT 1
13G	03ALL	'FROM->TO'	'SMOKYHL6 230.00 - SUMMIT 230KV CKT 1'	319	319	0.10261	114.1079	'GEN532751 1-WOLF CREEK GENERATING STATION UNIT 1
13G	03ALL	'TO->FROM'	'CLEARWATER - MILAN TAP 138KV CKT 1'	110	110	0.03559	131.9318	'GEN532751 1-WOLF CREEK GENERATING STATION UNIT 1
13G	03ALL	'TO->FROM'	'CLEARWATER - MILAN TAP 138KV CKT 1'	110	110	0.06218	131.9318	'GEN532751 1-WOLF CREEK GENERATING STATION UNIT 1
13G	03ALL	'TO->FROM'	'CLEARWATER - MILAN TAP 138KV CKT 1'	110	110	0.10851	131.9318	'GEN532751 1-WOLF CREEK GENERATING STATION UNIT 1
13G	03ALL	'TO->FROM'	'CLEARWATER - MILAN TAP 138KV CKT 1'	110	110	0.04844	131.9318	'GEN532751 1-WOLF CREEK GENERATING STATION UNIT 1
13G	03ALL	'TO->FROM'	'CLEARWATER - MILAN TAP 138KV CKT 1'	110	110	0.04844	131.9318	'GEN532751 1-WOLF CREEK GENERATING STATION UNIT 1
13G	03ALL	'TO->FROM'	'CLEARWATER - MILAN TAP 138KV CKT 1'	110	110	0.2104	131.9318	'GEN532751 1-WOLF CREEK GENERATING STATION UNIT 1
13G	03ALL	'TO->FROM'	'CLEARWATER - MILAN TAP 138KV CKT 1'	110	110	0.03753	131.9318	'GEN532751 1-WOLF CREEK GENERATING STATION UNIT 1
13G	03ALL	'TO->FROM'	'CLEARWATER - MILAN TAP 138KV CKT 1'	110	110	0.0394	131.9318	'GEN532751 1-WOLF CREEK GENERATING STATION UNIT 1
13G	03ALL	'TO->FROM'	'CLEARWATER - MILAN TAP 138KV CKT 1'	110	110	0.0394	131.9318	'GEN532751 1-WOLF CREEK GENERATING STATION UNIT 1
13G	03ALL	'TO->FROM'	'CLEARWATER - MILAN TAP 138KV CKT 1'	110	110	0.52726	131.9318	'GEN532751 1-WOLF CREEK GENERATING STATION UNIT 1
13G	03ALL	'TO->FROM'	'CLEARWATER - MILAN TAP 138KV CKT 1'	110	110	0.03696	131.9318	'GEN532751 1-WOLF CREEK GENERATING STATION UNIT 1
13G	03ALL	'TO->FROM'	'CLEARWATER - MILAN TAP 138KV CKT 1'	110	110	0.04265	131.9318	'GEN532751 1-WOLF CREEK GENERATING STATION UNIT 1
13G	03ALL	'TO->FROM'	'CLEARWATER - MILAN TAP 138KV CKT 1'	110	110	0.03608	131.9318	'GEN532751 1-WOLF CREEK GENERATING STATION UNIT 1
13G	03ALL	'FROM->TO'	'GREENSBURG - SUN CITY 115KV CKT 1'	120.7	129.5	0.17753	104.9855	'GEN532751 1-WOLF CREEK GENERATING STATION UNIT 1
13G	03ALL	'FROM->TO'	'GREENSBURG - SUN CITY 115KV CKT 1'	120.7	129.5	0.04472	104.9855	'GEN532751 1-WOLF CREEK GENERATING STATION UNIT 1
13G	03ALL	'FROM->TO'	'GREENSBURG - SUN CITY 115KV CKT 1'	120.7	129.5	0.04472	104.9855	'GEN532751 1-WOLF CREEK GENERATING STATION UNIT 1
13G	03ALL	'FROM->TO'	'GREENSBURG - SUN CITY 115KV CKT 1'	120.7	129.5	0.39904	104.9855	'GEN532751 1-WOLF CREEK GENERATING STATION UNIT 1
13G	03ALL	'FROM->TO'	'GREENSBURG - SUN CITY 115KV CKT 1'	120.7	129.5	0.0299	104.9855	'GEN532751 1-WOLF CREEK GENERATING STATION UNIT 1
13G	03ALL	'FROM->TO'	'GREENSBURG - SUN CITY 115KV CKT 1'	120.7	129.5	0.03411	104.9855	'GEN532751 1-WOLF CREEK GENERATING STATION UNIT 1
13G	03ALL	'FROM->TO'	'GREENSBURG - SUN CITY 115KV CKT 1'	120.7	129.5	0.03411	104.9855	'GEN532751 1-WOLF CREEK GENERATING STATION UNIT 1
13G	03ALL	'FROM->TO'	'GREENSBURG - SUN CITY 115KV CKT 1'	120.7	129.5	0.02996	104.9855	'GEN532751 1-WOLF CREEK GENERATING STATION UNIT 1
13G	03ALL	'FROM->TO'	'GREENSBURG - SUN CITY 115KV CKT 1'	120.7	129.5	0.03691	104.9855	'GEN532751 1-WOLF CREEK GENERATING STATION UNIT 1
13G	03ALL	'FROM->TO'	'GREENSBURG - SUN CITY 115KV CKT 1'	120.7	129.5	0.03126	104.9855	'GEN532751 1-WOLF CREEK GENERATING STATION UNIT 1
13G	03ALL	'TO->FROM'	'GREENSBURG - SSTARTP3 115.00 115KV CKT 1	120.7	129.5	0.17753	112.8402	'GEN532751 1-WOLF CREEK GENERATING STATION UNIT 1
13G	03ALL	'TO->FROM'	'GREENSBURG - SSTARTP3 115.00 115KV CKT 1	120.7	129.5	0.04472	112.8402	'GEN532751 1-WOLF CREEK GENERATING STATION UNIT 1
13G	03ALL	'TO->FROM'	'GREENSBURG - SSTARTP3 115.00 115KV CKT 1	120.7	129.5	0.04472	112.8402	'GEN532751 1-WOLF CREEK GENERATING STATION UNIT 1
13G	03ALL	'TO->FROM'	'GREENSBURG - SSTARTP3 115.00 115KV CKT 1	120.7	129.5	0.39904	112.8402	'GEN532751 1-WOLF CREEK GENERATING STATION UNIT 1
13G	03ALL	'TO->FROM'	'GREENSBURG - SSTARTP3 115.00 115KV CKT 1	120.7	129.5	0.0299	112.8402	'GEN532751 1-WOLF CREEK GENERATING STATION UNIT 1
13G	03ALL	'TO->FROM'	'GREENSBURG - SSTARTP3 115.00 115KV CKT 1	120.7	129.5	0.03411	112.8402	'GEN532751 1-WOLF CREEK GENERATING STATION UNIT 1
13G	03ALL	'TO->FROM'	'GREENSBURG - SSTARTP3 115.00 115KV CKT 1	120.7	129.5	0.03411	112.8402	'GEN532751 1-WOLF CREEK GENERATING STATION UNIT 1
13G	03ALL	'TO->FROM'	'GREENSBURG - SSTARTP3 115.00 115KV CKT 1	120.7	129.5	0.02996	112.8402	'GEN532751 1-WOLF CREEK GENERATING STATION UNIT 1
13G	03ALL	'TO->FROM'	'GREENSBURG - SSTARTP3 115.00 115KV CKT 1	120.7	129.5	0.03691	112.8402	'GEN532751 1-WOLF CREEK GENERATING STATION UNIT 1
13G	03ALL	'TO->FROM'	'GREENSBURG - SSTARTP3 115.00 115KV CKT 1	120.7	129.5	0.03126	112.8402	'GEN532751 1-WOLF CREEK GENERATING STATION UNIT 1
13G	03ALL	'FROM->TO'	'HARPER - MILAN TAP 138KV CKT 1'	95.6	95.6	0.03559	159.0421	'GEN532751 1-WOLF CREEK GENERATING STATION UNIT 1
13G	03ALL	'FROM->TO'	'HARPER - MILAN TAP 138KV CKT 1'	95.6	95.6	0.06218	159.0421	'GEN532751 1-WOLF CREEK GENERATING STATION UNIT 1
13G	03ALL	'FROM->TO'	'HARPER - MILAN TAP 138KV CKT 1'	95.6	95.6	0.10851	159.0421	'GEN532751 1-WOLF CREEK GENERATING STATION UNIT 1
13G	03ALL	'FROM->TO'	'HARPER - MILAN TAP 138KV CKT 1'	95.6	95.6	0.04844	159.0421	'GEN532751 1-WOLF CREEK GENERATING STATION UNIT 1
13G	03ALL	'FROM->TO'	'HARPER - MILAN TAP 138KV CKT 1'	95.6	95.6	0.04844	159.0421	'GEN532751 1-WOLF CREEK GENERATING STATION UNIT 1
13G	03ALL	'FROM->TO'	'HARPER - MILAN TAP 138KV CKT 1'	95.6	95.6	0.2104	159.0421	'GEN532751 1-WOLF CREEK GENERATING STATION UNIT 1
13G	03ALL	'FROM->TO'	'HARPER - MILAN TAP 138KV CKT 1'	95.6	95.6	0.03753	159.0421	'GEN532751 1-WOLF CREEK GENERATING STATION UNIT 1
13G	03ALL	'FROM->TO'	'HARPER - MILAN TAP 138KV CKT 1'	95.6	95.6	0.0394	159.0421	'GEN532751 1-WOLF CREEK GENERATING STATION UNIT 1
13G	03ALL	'FROM->TO'	'HARPER - MILAN TAP 138KV CKT 1'	95.6	95.6	0.0394	159.0421	'GEN532751 1-WOLF CREEK GENERATING STATION UNIT 1
13G	03ALL	'FROM->TO'	'HARPER - MILAN TAP 138KV CKT 1'	95.6	95.6	0.52726	159.0421	'GEN532751 1-WOLF CREEK GENERATING STATION UNIT 1
13G	03ALL	'FROM->TO'	'HARPER - MILAN TAP 138KV CKT 1'	95.6	95.6	0.03696	159.0421	'GEN532751 1-WOLF CREEK GENERATING STATION UNIT 1
13G	03ALL	'FROM->TO'	'HARPER - MILAN TAP 138KV CKT 1'	95.6	95.6	0.04265	159.0421	'GEN532751 1-WOLF CREEK GENERATING STATION UNIT 1
13G	03ALL	'FROM->TO'	'HARPER - MILAN TAP 138KV CKT 1'	95.6	95.6	0.03608	159.0421	'GEN532751 1-WOLF CREEK GENERATING STATION UNIT 1
13G	03ALL	'TO->FROM'	'MEDICINE LODGE - SUN CITY 115KV CKT 1'	120.7	129.5	0.17753	102.3995	'GEN532751 1-WOLF CREEK GENERATING STATION UNIT 1
13G	03ALL	'TO->FROM'	'MEDICINE LODGE - SUN CITY 115KV CKT 1'	120.7	129.5	0.04472	102.3995	'GEN532751 1-WOLF CREEK GENERATING STATION UNIT 1
13G	03ALL	'TO->FROM'	'MEDICINE LODGE - SUN CITY 115KV CKT 1'	120.7	129.5	0.04472	102.3995	'GEN532751 1-WOLF CREEK GENERATING STATION UNIT 1
13G	03ALL	'TO->FROM'	'MEDICINE LODGE - SUN CITY 115KV CKT 1'	120.7	129.5	0.39904	102.3995	'GEN532751 1-WOLF CREEK GENERATING STATION UNIT 1
13G	03ALL	'TO->FROM'	'MEDICINE LODGE - SUN CITY 115KV CKT 1'	120.7	129.5	0.0299	102.3995	'GEN532751 1-WOLF CREEK GENERATING STATION UNIT 1
13G	03ALL	'TO->FROM'	'MEDICINE LODGE - SUN CITY 115KV CKT 1'	120.7	129.5	0.03411	102.3995	'GEN532751 1-WOLF CREEK GENERATING STATION UNIT 1
13G	03ALL	'TO->FROM'	'MEDICINE LODGE - SUN CITY 115KV CKT 1'	120.7	129.5	0.03411	102.3995	'GEN532751 1-WOLF CREEK GENERATING STATION UNIT 1
13G	03ALL	'TO->FROM'	'MEDICINE LODGE - SUN CITY 115KV CKT 1'	120.7	129.5	0.02996	102.3995	'GEN532751 1-WOLF CREEK GENERATING STATION UNIT 1
13G	03ALL	'TO->FROM'	'MEDICINE LODGE - SUN CITY 115KV CKT 1'	120.7	129.5	0.03691	102.3995	'GEN532751 1-WOLF CREEK GENERATING STATION UNIT 1
13G	03ALL	'TO->FROM'	'MEDICINE LODGE - SUN CITY 115KV CKT 1'	120.7	129.5	0.03126	102.3995	'GEN532751 1-WOLF CREEK GENERATING STATION UNIT 1
13G	03ALL	'TO->FROM'	'BARBER 3 115.00 - MEDICINE LODGE 115KV CKT 1'	79.7	79.7	0.11605	103.2698	'GEN532751 1-WOLF CREEK GENERATING STATION UNIT 1
13G	03ALL	'TO->FROM'	'BARBER 3 115.00 - MEDICINE LODGE 115KV CKT 1'	79.7	79.7	0.03487	103.2698	'GEN532751 1-WOLF CREEK GENERATING STATION UNIT 1
13G	03ALL	'TO->FROM'	'BARBER 3 115.00 - MEDICINE LODGE 115KV CKT 1'	79.7	79.7	0.03487	103.2698	'GEN532751 1-WOLF CREEK GENERATING STATION UNIT 1

SEASON	GROUP	DIRECTION	MONITORED ELEMENT	RATE A (MVA)	RATE B (MVA)	TDF	TC%LOADING (%MVA)	CONTINGENCY NAME
13G	03ALL	'TO->FROM'	'BARBER 3 115.00 - MEDICINE LODGE 115KV CKT 1'	79.7	79.7	0.25191	103.2698	'GEN532751 1-WOLF CREEK GENERATING STATION UNIT 1
13G	03ALL	'FROM->TO'	'SMOKYHL6 230.00 - SUMMIT 230KV CKT 1'	319	319	0.18549	101.121	'GEN539670 4-JUDSON LARGE GENERATOR'
13G	03ALL	'FROM->TO'	'SMOKYHL6 230.00 - SUMMIT 230KV CKT 1'	319	319	0.08979	101.121	'GEN539670 4-JUDSON LARGE GENERATOR'
13G	03ALL	'FROM->TO'	'SMOKYHL6 230.00 - SUMMIT 230KV CKT 1'	319	319	0.10326	101.121	'GEN539670 4-JUDSON LARGE GENERATOR'
13G	03ALL	'FROM->TO'	'SMOKYHL6 230.00 - SUMMIT 230KV CKT 1'	319	319	0.12225	101.121	'GEN539670 4-JUDSON LARGE GENERATOR'
13G	03ALL	'FROM->TO'	'SMOKYHL6 230.00 - SUMMIT 230KV CKT 1'	319	319	0.12225	101.121	'GEN539670 4-JUDSON LARGE GENERATOR'
13G	03ALL	'FROM->TO'	'SMOKYHL6 230.00 - SUMMIT 230KV CKT 1'	319	319	0.07803	101.121	'GEN539670 4-JUDSON LARGE GENERATOR'
13G	03ALL	'FROM->TO'	'SMOKYHL6 230.00 - SUMMIT 230KV CKT 1'	319	319	0.09991	101.121	'GEN539670 4-JUDSON LARGE GENERATOR'
13G	03ALL	'FROM->TO'	'SMOKYHL6 230.00 - SUMMIT 230KV CKT 1'	319	319	0.11509	101.121	'GEN539670 4-JUDSON LARGE GENERATOR'
13G	03ALL	'FROM->TO'	'SMOKYHL6 230.00 - SUMMIT 230KV CKT 1'	319	319	0.11509	101.121	'GEN539670 4-JUDSON LARGE GENERATOR'
13G	03ALL	'FROM->TO'	'SMOKYHL6 230.00 - SUMMIT 230KV CKT 1'	319	319	0.62637	101.121	'GEN539670 4-JUDSON LARGE GENERATOR'
13G	03ALL	'FROM->TO'	'SMOKYHL6 230.00 - SUMMIT 230KV CKT 1'	319	319	0.09991	101.121	'GEN539670 4-JUDSON LARGE GENERATOR'
13G	03ALL	'FROM->TO'	'SMOKYHL6 230.00 - SUMMIT 230KV CKT 1'	319	319	0.1274	101.121	'GEN539670 4-JUDSON LARGE GENERATOR'
13G	03ALL	'FROM->TO'	'SMOKYHL6 230.00 - SUMMIT 230KV CKT 1'	319	319	0.10261	101.121	'GEN539670 4-JUDSON LARGE GENERATOR'
13G	03ALL	'TO->FROM'	'CLEARWATER - MILAN TAP 138KV CKT 1'	110	110	0.03559	112.383	'GEN539670 4-JUDSON LARGE GENERATOR'
13G	03ALL	'TO->FROM'	'CLEARWATER - MILAN TAP 138KV CKT 1'	110	110	0.06218	112.383	'GEN539670 4-JUDSON LARGE GENERATOR'
13G	03ALL	'TO->FROM'	'CLEARWATER - MILAN TAP 138KV CKT 1'	110	110	0.10851	112.383	'GEN539670 4-JUDSON LARGE GENERATOR'
13G	03ALL	'TO->FROM'	'CLEARWATER - MILAN TAP 138KV CKT 1'	110	110	0.04844	112.383	'GEN539670 4-JUDSON LARGE GENERATOR'
13G	03ALL	'TO->FROM'	'CLEARWATER - MILAN TAP 138KV CKT 1'	110	110	0.04844	112.383	'GEN539670 4-JUDSON LARGE GENERATOR'
13G	03ALL	'TO->FROM'	'CLEARWATER - MILAN TAP 138KV CKT 1'	110	110	0.2104	112.383	'GEN539670 4-JUDSON LARGE GENERATOR'
13G	03ALL	'TO->FROM'	'CLEARWATER - MILAN TAP 138KV CKT 1'	110	110	0.03753	112.383	'GEN539670 4-JUDSON LARGE GENERATOR'
13G	03ALL	'TO->FROM'	'CLEARWATER - MILAN TAP 138KV CKT 1'	110	110	0.0394	112.383	'GEN539670 4-JUDSON LARGE GENERATOR'
13G	03ALL	'TO->FROM'	'CLEARWATER - MILAN TAP 138KV CKT 1'	110	110	0.0394	112.383	'GEN539670 4-JUDSON LARGE GENERATOR'
13G	03ALL	'TO->FROM'	'CLEARWATER - MILAN TAP 138KV CKT 1'	110	110	0.52726	112.383	'GEN539670 4-JUDSON LARGE GENERATOR'
13G	03ALL	'TO->FROM'	'CLEARWATER - MILAN TAP 138KV CKT 1'	110	110	0.03696	112.383	'GEN539670 4-JUDSON LARGE GENERATOR'
13G	03ALL	'TO->FROM'	'CLEARWATER - MILAN TAP 138KV CKT 1'	110	110	0.04265	112.383	'GEN539670 4-JUDSON LARGE GENERATOR'
13G	03ALL	'TO->FROM'	'CLEARWATER - MILAN TAP 138KV CKT 1'	110	110	0.03608	112.383	'GEN539670 4-JUDSON LARGE GENERATOR'
13G	03ALL	'FROM->TO'	'HARPER - MILAN TAP 138KV CKT 1'	95.6	95.6	0.03559	136.7438	'GEN539670 4-JUDSON LARGE GENERATOR'
13G	03ALL	'FROM->TO'	'HARPER - MILAN TAP 138KV CKT 1'	95.6	95.6	0.06218	136.7438	'GEN539670 4-JUDSON LARGE GENERATOR'
13G	03ALL	'FROM->TO'	'HARPER - MILAN TAP 138KV CKT 1'	95.6	95.6	0.10851	136.7438	'GEN539670 4-JUDSON LARGE GENERATOR'
13G	03ALL	'FROM->TO'	'HARPER - MILAN TAP 138KV CKT 1'	95.6	95.6	0.04844	136.7438	'GEN539670 4-JUDSON LARGE GENERATOR'
13G	03ALL	'FROM->TO'	'HARPER - MILAN TAP 138KV CKT 1'	95.6	95.6	0.04844	136.7438	'GEN539670 4-JUDSON LARGE GENERATOR'
13G	03ALL	'FROM->TO'	'HARPER - MILAN TAP 138KV CKT 1'	95.6	95.6	0.2104	136.7438	'GEN539670 4-JUDSON LARGE GENERATOR'
13G	03ALL	'FROM->TO'	'HARPER - MILAN TAP 138KV CKT 1'	95.6	95.6	0.03753	136.7438	'GEN539670 4-JUDSON LARGE GENERATOR'
13G	03ALL	'FROM->TO'	'HARPER - MILAN TAP 138KV CKT 1'	95.6	95.6	0.0394	136.7438	'GEN539670 4-JUDSON LARGE GENERATOR'
13G	03ALL	'FROM->TO'	'HARPER - MILAN TAP 138KV CKT 1'	95.6	95.6	0.0394	136.7438	'GEN539670 4-JUDSON LARGE GENERATOR'
13G	03ALL	'FROM->TO'	'HARPER - MILAN TAP 138KV CKT 1'	95.6	95.6	0.52726	136.7438	'GEN539670 4-JUDSON LARGE GENERATOR'
13G	03ALL	'FROM->TO'	'HARPER - MILAN TAP 138KV CKT 1'	95.6	95.6	0.03696	136.7438	'GEN539670 4-JUDSON LARGE GENERATOR'
13G	03ALL	'FROM->TO'	'HARPER - MILAN TAP 138KV CKT 1'	95.6	95.6	0.04265	136.7438	'GEN539670 4-JUDSON LARGE GENERATOR'
13G	03ALL	'FROM->TO'	'HARPER - MILAN TAP 138KV CKT 1'	95.6	95.6	0.03608	136.7438	'GEN539670 4-JUDSON LARGE GENERATOR'
13G	03ALL	'FROM->TO'	'SMOKYHL6 230.00 - SUMMIT 230KV CKT 1'	319	319	0.18549	101.0725	'GEN539753 1-CLR_2 0.6900'
13G	03ALL	'FROM->TO'	'SMOKYHL6 230.00 - SUMMIT 230KV CKT 1'	319	319	0.08979	101.0725	'GEN539753 1-CLR_2 0.6900'
13G	03ALL	'FROM->TO'	'SMOKYHL6 230.00 - SUMMIT 230KV CKT 1'	319	319	0.10326	101.0725	'GEN539753 1-CLR_2 0.6900'
13G	03ALL	'FROM->TO'	'SMOKYHL6 230.00 - SUMMIT 230KV CKT 1'	319	319	0.12225	101.0725	'GEN539753 1-CLR_2 0.6900'
13G	03ALL	'FROM->TO'	'SMOKYHL6 230.00 - SUMMIT 230KV CKT 1'	319	319	0.12225	101.0725	'GEN539753 1-CLR_2 0.6900'
13G	03ALL	'FROM->TO'	'SMOKYHL6 230.00 - SUMMIT 230KV CKT 1'	319	319	0.07803	101.0725	'GEN539753 1-CLR_2 0.6900'
13G	03ALL	'FROM->TO'	'SMOKYHL6 230.00 - SUMMIT 230KV CKT 1'	319	319	0.09991	101.0725	'GEN539753 1-CLR_2 0.6900'
13G	03ALL	'FROM->TO'	'SMOKYHL6 230.00 - SUMMIT 230KV CKT 1'	319	319	0.11509	101.0725	'GEN539753 1-CLR_2 0.6900'
13G	03ALL	'FROM->TO'	'SMOKYHL6 230.00 - SUMMIT 230KV CKT 1'	319	319	0.11509	101.0725	'GEN539753 1-CLR_2 0.6900'
13G	03ALL	'FROM->TO'	'SMOKYHL6 230.00 - SUMMIT 230KV CKT 1'	319	319	0.62637	101.0725	'GEN539753 1-CLR_2 0.6900'
13G	03ALL	'FROM->TO'	'SMOKYHL6 230.00 - SUMMIT 230KV CKT 1'	319	319	0.09991	101.0725	'GEN539753 1-CLR_2 0.6900'
13G	03ALL	'FROM->TO'	'SMOKYHL6 230.00 - SUMMIT 230KV CKT 1'	319	319	0.1274	101.0725	'GEN539753 1-CLR_2 0.6900'
13G	03ALL	'FROM->TO'	'SMOKYHL6 230.00 - SUMMIT 230KV CKT 1'	319	319	0.10261	101.0725	'GEN539753 1-CLR_2 0.6900'
13G	03ALL	'TO->FROM'	'CLEARWATER - MILAN TAP 138KV CKT 1'	110	110	0.03559	118.8519	'GEN539753 1-CLR_2 0.6900'
13G	03ALL	'TO->FROM'	'CLEARWATER - MILAN TAP 138KV CKT 1'	110	110	0.06218	118.8519	'GEN539753 1-CLR_2 0.6900'
13G	03ALL	'TO->FROM'	'CLEARWATER - MILAN TAP 138KV CKT 1'	110	110	0.10851	118.8519	'GEN539753 1-CLR_2 0.6900'
13G	03ALL	'TO->FROM'	'CLEARWATER - MILAN TAP 138KV CKT 1'	110	110	0.04844	118.8519	'GEN539753 1-CLR_2 0.6900'
13G	03ALL	'TO->FROM'	'CLEARWATER - MILAN TAP 138KV CKT 1'	110	110	0.04844	118.8519	'GEN539753 1-CLR_2 0.6900'
13G	03ALL	'TO->FROM'	'CLEARWATER - MILAN TAP 138KV CKT 1'	110	110	0.2104	118.8519	'GEN539753 1-CLR_2 0.6900'
13G	03ALL	'TO->FROM'	'CLEARWATER - MILAN TAP 138KV CKT 1'	110	110	0.03753	118.8519	'GEN539753 1-CLR_2 0.6900'
13G	03ALL	'TO->FROM'	'CLEARWATER - MILAN TAP 138KV CKT 1'	110	110	0.0394	118.8519	'GEN539753 1-CLR_2 0.6900'
13G	03ALL	'TO->FROM'	'CLEARWATER - MILAN TAP 138KV CKT 1'	110	110	0.0394	118.8519	'GEN539753 1-CLR_2 0.6900'
13G	03ALL	'TO->FROM'	'CLEARWATER - MILAN TAP 138KV CKT 1'	110	110	0.52726	118.8519	'GEN539753 1-CLR_2 0.6900'
13G	03ALL	'TO->FROM'	'CLEARWATER - MILAN TAP 138KV CKT 1'	110	110	0.03696	118.8519	'GEN539753 1-CLR_2 0.6900'

SEASON	GROUP	DIRECTION	MONITORED ELEMENT	RATE A (MVA)	RATE B (MVA)	TDF	TC%LOADING (%MVA)	CONTINGENCY NAME
13G	03ALL	'TO->FROM'	'CLEARWATER - MILAN TAP 138KV CKT 1'	110	110	0.04265	118.8519	'GEN539753 1-CLR_2 0.6900'
13G	03ALL	'TO->FROM'	'CLEARWATER - MILAN TAP 138KV CKT 1'	110	110	0.03608	118.8519	'GEN539753 1-CLR_2 0.6900'
13G	03ALL	'TO->FROM'	'GREENSBURG - SSTARTP3 115.00 115KV CKT 1	120.7	129.5	0.17753	103.3503	'GEN539753 1-CLR_2 0.6900'
13G	03ALL	'TO->FROM'	'GREENSBURG - SSTARTP3 115.00 115KV CKT 1	120.7	129.5	0.04472	103.3503	'GEN539753 1-CLR_2 0.6900'
13G	03ALL	'TO->FROM'	'GREENSBURG - SSTARTP3 115.00 115KV CKT 1	120.7	129.5	0.04472	103.3503	'GEN539753 1-CLR_2 0.6900'
13G	03ALL	'TO->FROM'	'GREENSBURG - SSTARTP3 115.00 115KV CKT 1	120.7	129.5	0.39904	103.3503	'GEN539753 1-CLR_2 0.6900'
13G	03ALL	'TO->FROM'	'GREENSBURG - SSTARTP3 115.00 115KV CKT 1	120.7	129.5	0.0299	103.3503	'GEN539753 1-CLR_2 0.6900'
13G	03ALL	'TO->FROM'	'GREENSBURG - SSTARTP3 115.00 115KV CKT 1	120.7	129.5	0.03411	103.3503	'GEN539753 1-CLR_2 0.6900'
13G	03ALL	'TO->FROM'	'GREENSBURG - SSTARTP3 115.00 115KV CKT 1	120.7	129.5	0.03411	103.3503	'GEN539753 1-CLR_2 0.6900'
13G	03ALL	'TO->FROM'	'GREENSBURG - SSTARTP3 115.00 115KV CKT 1	120.7	129.5	0.02996	103.3503	'GEN539753 1-CLR_2 0.6900'
13G	03ALL	'TO->FROM'	'GREENSBURG - SSTARTP3 115.00 115KV CKT 1	120.7	129.5	0.03691	103.3503	'GEN539753 1-CLR_2 0.6900'
13G	03ALL	'TO->FROM'	'GREENSBURG - SSTARTP3 115.00 115KV CKT 1	120.7	129.5	0.03126	103.3503	'GEN539753 1-CLR_2 0.6900'
13G	03ALL	'FROM->TO'	'HARPER - MILAN TAP 138KV CKT 1'	95.6	95.6	0.03559	144.1138	'GEN539753 1-CLR_2 0.6900'
13G	03ALL	'FROM->TO'	'HARPER - MILAN TAP 138KV CKT 1'	95.6	95.6	0.06218	144.1138	'GEN539753 1-CLR_2 0.6900'
13G	03ALL	'FROM->TO'	'HARPER - MILAN TAP 138KV CKT 1'	95.6	95.6	0.10851	144.1138	'GEN539753 1-CLR_2 0.6900'
13G	03ALL	'FROM->TO'	'HARPER - MILAN TAP 138KV CKT 1'	95.6	95.6	0.04844	144.1138	'GEN539753 1-CLR_2 0.6900'
13G	03ALL	'FROM->TO'	'HARPER - MILAN TAP 138KV CKT 1'	95.6	95.6	0.04844	144.1138	'GEN539753 1-CLR_2 0.6900'
13G	03ALL	'FROM->TO'	'HARPER - MILAN TAP 138KV CKT 1'	95.6	95.6	0.2104	144.1138	'GEN539753 1-CLR_2 0.6900'
13G	03ALL	'FROM->TO'	'HARPER - MILAN TAP 138KV CKT 1'	95.6	95.6	0.03753	144.1138	'GEN539753 1-CLR_2 0.6900'
13G	03ALL	'FROM->TO'	'HARPER - MILAN TAP 138KV CKT 1'	95.6	95.6	0.0394	144.1138	'GEN539753 1-CLR_2 0.6900'
13G	03ALL	'FROM->TO'	'HARPER - MILAN TAP 138KV CKT 1'	95.6	95.6	0.0394	144.1138	'GEN539753 1-CLR_2 0.6900'
13G	03ALL	'FROM->TO'	'HARPER - MILAN TAP 138KV CKT 1'	95.6	95.6	0.52726	144.1138	'GEN539753 1-CLR_2 0.6900'
13G	03ALL	'FROM->TO'	'HARPER - MILAN TAP 138KV CKT 1'	95.6	95.6	0.03696	144.1138	'GEN539753 1-CLR_2 0.6900'
13G	03ALL	'FROM->TO'	'HARPER - MILAN TAP 138KV CKT 1'	95.6	95.6	0.04265	144.1138	'GEN539753 1-CLR_2 0.6900'
13G	03ALL	'FROM->TO'	'HARPER - MILAN TAP 138KV CKT 1'	95.6	95.6	0.03608	144.1138	'GEN539753 1-CLR_2 0.6900'
13G	03ALL	'FROM->TO'	'SMOKYHL6 230.00 - SUMMIT 230KV CKT 1'	319	319	0.18549	102.4623	'GEN539762 1-SSWIND 1 34.500'
13G	03ALL	'FROM->TO'	'SMOKYHL6 230.00 - SUMMIT 230KV CKT 1'	319	319	0.08979	102.4623	'GEN539762 1-SSWIND 1 34.500'
13G	03ALL	'FROM->TO'	'SMOKYHL6 230.00 - SUMMIT 230KV CKT 1'	319	319	0.10326	102.4623	'GEN539762 1-SSWIND 1 34.500'
13G	03ALL	'FROM->TO'	'SMOKYHL6 230.00 - SUMMIT 230KV CKT 1'	319	319	0.12225	102.4623	'GEN539762 1-SSWIND 1 34.500'
13G	03ALL	'FROM->TO'	'SMOKYHL6 230.00 - SUMMIT 230KV CKT 1'	319	319	0.12225	102.4623	'GEN539762 1-SSWIND 1 34.500'
13G	03ALL	'FROM->TO'	'SMOKYHL6 230.00 - SUMMIT 230KV CKT 1'	319	319	0.07803	102.4623	'GEN539762 1-SSWIND 1 34.500'
13G	03ALL	'FROM->TO'	'SMOKYHL6 230.00 - SUMMIT 230KV CKT 1'	319	319	0.09991	102.4623	'GEN539762 1-SSWIND 1 34.500'
13G	03ALL	'FROM->TO'	'SMOKYHL6 230.00 - SUMMIT 230KV CKT 1'	319	319	0.11509	102.4623	'GEN539762 1-SSWIND 1 34.500'
13G	03ALL	'FROM->TO'	'SMOKYHL6 230.00 - SUMMIT 230KV CKT 1'	319	319	0.11509	102.4623	'GEN539762 1-SSWIND 1 34.500'
13G	03ALL	'FROM->TO'	'SMOKYHL6 230.00 - SUMMIT 230KV CKT 1'	319	319	0.62637	102.4623	'GEN539762 1-SSWIND 1 34.500'
13G	03ALL	'FROM->TO'	'SMOKYHL6 230.00 - SUMMIT 230KV CKT 1'	319	319	0.09991	102.4623	'GEN539762 1-SSWIND 1 34.500'
13G	03ALL	'FROM->TO'	'SMOKYHL6 230.00 - SUMMIT 230KV CKT 1'	319	319	0.1274	102.4623	'GEN539762 1-SSWIND 1 34.500'
13G	03ALL	'FROM->TO'	'SMOKYHL6 230.00 - SUMMIT 230KV CKT 1'	319	319	0.10261	102.4623	'GEN539762 1-SSWIND 1 34.500'
13G	03ALL	'TO->FROM'	'CLEARWATER - MILAN TAP 138KV CKT 1'	110	110	0.03559	104.1012	'GEN539762 1-SSWIND 1 34.500'
13G	03ALL	'TO->FROM'	'CLEARWATER - MILAN TAP 138KV CKT 1'	110	110	0.06218	104.1012	'GEN539762 1-SSWIND 1 34.500'
13G	03ALL	'TO->FROM'	'CLEARWATER - MILAN TAP 138KV CKT 1'	110	110	0.10851	104.1012	'GEN539762 1-SSWIND 1 34.500'
13G	03ALL	'TO->FROM'	'CLEARWATER - MILAN TAP 138KV CKT 1'	110	110	0.04844	104.1012	'GEN539762 1-SSWIND 1 34.500'
13G	03ALL	'TO->FROM'	'CLEARWATER - MILAN TAP 138KV CKT 1'	110	110	0.04844	104.1012	'GEN539762 1-SSWIND 1 34.500'
13G	03ALL	'TO->FROM'	'CLEARWATER - MILAN TAP 138KV CKT 1'	110	110	0.2104	104.1012	'GEN539762 1-SSWIND 1 34.500'
13G	03ALL	'TO->FROM'	'CLEARWATER - MILAN TAP 138KV CKT 1'	110	110	0.03753	104.1012	'GEN539762 1-SSWIND 1 34.500'
13G	03ALL	'TO->FROM'	'CLEARWATER - MILAN TAP 138KV CKT 1'	110	110	0.0394	104.1012	'GEN539762 1-SSWIND 1 34.500'
13G	03ALL	'TO->FROM'	'CLEARWATER - MILAN TAP 138KV CKT 1'	110	110	0.0394	104.1012	'GEN539762 1-SSWIND 1 34.500'
13G	03ALL	'TO->FROM'	'CLEARWATER - MILAN TAP 138KV CKT 1'	110	110	0.52726	104.1012	'GEN539762 1-SSWIND 1 34.500'
13G	03ALL	'TO->FROM'	'CLEARWATER - MILAN TAP 138KV CKT 1'	110	110	0.03696	104.1012	'GEN539762 1-SSWIND 1 34.500'
13G	03ALL	'TO->FROM'	'CLEARWATER - MILAN TAP 138KV CKT 1'	110	110	0.04265	104.1012	'GEN539762 1-SSWIND 1 34.500'
13G	03ALL	'TO->FROM'	'CLEARWATER - MILAN TAP 138KV CKT 1'	110	110	0.03608	104.1012	'GEN539762 1-SSWIND 1 34.500'
13G	03ALL	'FROM->TO'	'HARPER - MILAN TAP 138KV CKT 1'	95.6	95.6	0.03559	127.2404	'GEN539762 1-SSWIND 1 34.500'
13G	03ALL	'FROM->TO'	'HARPER - MILAN TAP 138KV CKT 1'	95.6	95.6	0.06218	127.2404	'GEN539762 1-SSWIND 1 34.500'
13G	03ALL	'FROM->TO'	'HARPER - MILAN TAP 138KV CKT 1'	95.6	95.6	0.10851	127.2404	'GEN539762 1-SSWIND 1 34.500'
13G	03ALL	'FROM->TO'	'HARPER - MILAN TAP 138KV CKT 1'	95.6	95.6	0.04844	127.2404	'GEN539762 1-SSWIND 1 34.500'
13G	03ALL	'FROM->TO'	'HARPER - MILAN TAP 138KV CKT 1'	95.6	95.6	0.04844	127.2404	'GEN539762 1-SSWIND 1 34.500'
13G	03ALL	'FROM->TO'	'HARPER - MILAN TAP 138KV CKT 1'	95.6	95.6	0.2104	127.2404	'GEN539762 1-SSWIND 1 34.500'
13G	03ALL	'FROM->TO'	'HARPER - MILAN TAP 138KV CKT 1'	95.6	95.6	0.03753	127.2404	'GEN539762 1-SSWIND 1 34.500'
13G	03ALL	'FROM->TO'	'HARPER - MILAN TAP 138KV CKT 1'	95.6	95.6	0.0394	127.2404	'GEN539762 1-SSWIND 1 34.500'
13G	03ALL	'FROM->TO'	'HARPER - MILAN TAP 138KV CKT 1'	95.6	95.6	0.0394	127.2404	'GEN539762 1-SSWIND 1 34.500'
13G	03ALL	'FROM->TO'	'HARPER - MILAN TAP 138KV CKT 1'	95.6	95.6	0.52726	127.2404	'GEN539762 1-SSWIND 1 34.500'
13G	03ALL	'FROM->TO'	'HARPER - MILAN TAP 138KV CKT 1'	95.6	95.6	0.03696	127.2404	'GEN539762 1-SSWIND 1 34.500'
13G	03ALL	'FROM->TO'	'HARPER - MILAN TAP 138KV CKT 1'	95.6	95.6	0.04265	127.2404	'GEN539762 1-SSWIND 1 34.500'
13G	03ALL	'FROM->TO'	'HARPER - MILAN TAP 138KV CKT 1'	95.6	95.6	0.03608	127.2404	'GEN539762 1-SSWIND 1 34.500'

SEASON	GROUP	DIRECTION	MONITORED ELEMENT	RATE A (MVA)	RATE B (MVA)	TDF	TC%LOADING (%MVA)	CONTINGENCY NAME
13G	03ALL	'FROM->TO'	'SMOKYHL6 230.00 - SUMMIT 230KV CKT 1'	319	319	0.18549	101.6669	'GEN539767 1-GRAY COUNTY WIND FARM'
13G	03ALL	'FROM->TO'	'SMOKYHL6 230.00 - SUMMIT 230KV CKT 1'	319	319	0.08979	101.6669	'GEN539767 1-GRAY COUNTY WIND FARM'
13G	03ALL	'FROM->TO'	'SMOKYHL6 230.00 - SUMMIT 230KV CKT 1'	319	319	0.10326	101.6669	'GEN539767 1-GRAY COUNTY WIND FARM'
13G	03ALL	'FROM->TO'	'SMOKYHL6 230.00 - SUMMIT 230KV CKT 1'	319	319	0.12225	101.6669	'GEN539767 1-GRAY COUNTY WIND FARM'
13G	03ALL	'FROM->TO'	'SMOKYHL6 230.00 - SUMMIT 230KV CKT 1'	319	319	0.12225	101.6669	'GEN539767 1-GRAY COUNTY WIND FARM'
13G	03ALL	'FROM->TO'	'SMOKYHL6 230.00 - SUMMIT 230KV CKT 1'	319	319	0.07803	101.6669	'GEN539767 1-GRAY COUNTY WIND FARM'
13G	03ALL	'FROM->TO'	'SMOKYHL6 230.00 - SUMMIT 230KV CKT 1'	319	319	0.09991	101.6669	'GEN539767 1-GRAY COUNTY WIND FARM'
13G	03ALL	'FROM->TO'	'SMOKYHL6 230.00 - SUMMIT 230KV CKT 1'	319	319	0.11509	101.6669	'GEN539767 1-GRAY COUNTY WIND FARM'
13G	03ALL	'FROM->TO'	'SMOKYHL6 230.00 - SUMMIT 230KV CKT 1'	319	319	0.11509	101.6669	'GEN539767 1-GRAY COUNTY WIND FARM'
13G	03ALL	'FROM->TO'	'SMOKYHL6 230.00 - SUMMIT 230KV CKT 1'	319	319	0.62637	101.6669	'GEN539767 1-GRAY COUNTY WIND FARM'
13G	03ALL	'FROM->TO'	'SMOKYHL6 230.00 - SUMMIT 230KV CKT 1'	319	319	0.09991	101.6669	'GEN539767 1-GRAY COUNTY WIND FARM'
13G	03ALL	'FROM->TO'	'SMOKYHL6 230.00 - SUMMIT 230KV CKT 1'	319	319	0.1274	101.6669	'GEN539767 1-GRAY COUNTY WIND FARM'
13G	03ALL	'FROM->TO'	'SMOKYHL6 230.00 - SUMMIT 230KV CKT 1'	319	319	0.10261	101.6669	'GEN539767 1-GRAY COUNTY WIND FARM'
13G	03ALL	'TO->FROM'	'CLEARWATER - MILAN TAP 138KV CKT 1'	110	110	0.03559	114.4974	'GEN539767 1-GRAY COUNTY WIND FARM'
13G	03ALL	'TO->FROM'	'CLEARWATER - MILAN TAP 138KV CKT 1'	110	110	0.06218	114.4974	'GEN539767 1-GRAY COUNTY WIND FARM'
13G	03ALL	'TO->FROM'	'CLEARWATER - MILAN TAP 138KV CKT 1'	110	110	0.10851	114.4974	'GEN539767 1-GRAY COUNTY WIND FARM'
13G	03ALL	'TO->FROM'	'CLEARWATER - MILAN TAP 138KV CKT 1'	110	110	0.04844	114.4974	'GEN539767 1-GRAY COUNTY WIND FARM'
13G	03ALL	'TO->FROM'	'CLEARWATER - MILAN TAP 138KV CKT 1'	110	110	0.04844	114.4974	'GEN539767 1-GRAY COUNTY WIND FARM'
13G	03ALL	'TO->FROM'	'CLEARWATER - MILAN TAP 138KV CKT 1'	110	110	0.2104	114.4974	'GEN539767 1-GRAY COUNTY WIND FARM'
13G	03ALL	'TO->FROM'	'CLEARWATER - MILAN TAP 138KV CKT 1'	110	110	0.03753	114.4974	'GEN539767 1-GRAY COUNTY WIND FARM'
13G	03ALL	'TO->FROM'	'CLEARWATER - MILAN TAP 138KV CKT 1'	110	110	0.0394	114.4974	'GEN539767 1-GRAY COUNTY WIND FARM'
13G	03ALL	'TO->FROM'	'CLEARWATER - MILAN TAP 138KV CKT 1'	110	110	0.0394	114.4974	'GEN539767 1-GRAY COUNTY WIND FARM'
13G	03ALL	'TO->FROM'	'CLEARWATER - MILAN TAP 138KV CKT 1'	110	110	0.52726	114.4974	'GEN539767 1-GRAY COUNTY WIND FARM'
13G	03ALL	'TO->FROM'	'CLEARWATER - MILAN TAP 138KV CKT 1'	110	110	0.03696	114.4974	'GEN539767 1-GRAY COUNTY WIND FARM'
13G	03ALL	'TO->FROM'	'CLEARWATER - MILAN TAP 138KV CKT 1'	110	110	0.04265	114.4974	'GEN539767 1-GRAY COUNTY WIND FARM'
13G	03ALL	'TO->FROM'	'CLEARWATER - MILAN TAP 138KV CKT 1'	110	110	0.03608	114.4974	'GEN539767 1-GRAY COUNTY WIND FARM'
13G	03ALL	'FROM->TO'	'HARPER - MILAN TAP 138KV CKT 1'	95.6	95.6	0.03559	139.1844	'GEN539767 1-GRAY COUNTY WIND FARM'
13G	03ALL	'FROM->TO'	'HARPER - MILAN TAP 138KV CKT 1'	95.6	95.6	0.06218	139.1844	'GEN539767 1-GRAY COUNTY WIND FARM'
13G	03ALL	'FROM->TO'	'HARPER - MILAN TAP 138KV CKT 1'	95.6	95.6	0.10851	139.1844	'GEN539767 1-GRAY COUNTY WIND FARM'
13G	03ALL	'FROM->TO'	'HARPER - MILAN TAP 138KV CKT 1'	95.6	95.6	0.04844	139.1844	'GEN539767 1-GRAY COUNTY WIND FARM'
13G	03ALL	'FROM->TO'	'HARPER - MILAN TAP 138KV CKT 1'	95.6	95.6	0.04844	139.1844	'GEN539767 1-GRAY COUNTY WIND FARM'
13G	03ALL	'FROM->TO'	'HARPER - MILAN TAP 138KV CKT 1'	95.6	95.6	0.2104	139.1844	'GEN539767 1-GRAY COUNTY WIND FARM'
13G	03ALL	'FROM->TO'	'HARPER - MILAN TAP 138KV CKT 1'	95.6	95.6	0.03753	139.1844	'GEN539767 1-GRAY COUNTY WIND FARM'
13G	03ALL	'FROM->TO'	'HARPER - MILAN TAP 138KV CKT 1'	95.6	95.6	0.0394	139.1844	'GEN539767 1-GRAY COUNTY WIND FARM'
13G	03ALL	'FROM->TO'	'HARPER - MILAN TAP 138KV CKT 1'	95.6	95.6	0.0394	139.1844	'GEN539767 1-GRAY COUNTY WIND FARM'
13G	03ALL	'FROM->TO'	'HARPER - MILAN TAP 138KV CKT 1'	95.6	95.6	0.52726	139.1844	'GEN539767 1-GRAY COUNTY WIND FARM'
13G	03ALL	'FROM->TO'	'HARPER - MILAN TAP 138KV CKT 1'	95.6	95.6	0.03696	139.1844	'GEN539767 1-GRAY COUNTY WIND FARM'
13G	03ALL	'FROM->TO'	'HARPER - MILAN TAP 138KV CKT 1'	95.6	95.6	0.04265	139.1844	'GEN539767 1-GRAY COUNTY WIND FARM'
13G	03ALL	'FROM->TO'	'HARPER - MILAN TAP 138KV CKT 1'	95.6	95.6	0.03608	139.1844	'GEN539767 1-GRAY COUNTY WIND FARM'
13G	03ALL	'TO->FROM'	'FLATRDG3 - MEDICINE LODGE 138KV CKT 1'	96	96	0.03559	118.9828	'GEN539945 1-FLATRWDWG1 0.6900'
13G	03ALL	'TO->FROM'	'FLATRDG3 - MEDICINE LODGE 138KV CKT 1'	96	96	0.06218	118.9828	'GEN539945 1-FLATRWDWG1 0.6900'
13G	03ALL	'TO->FROM'	'FLATRDG3 - MEDICINE LODGE 138KV CKT 1'	96	96	0.10851	118.9828	'GEN539945 1-FLATRWDWG1 0.6900'
13G	03ALL	'TO->FROM'	'FLATRDG3 - MEDICINE LODGE 138KV CKT 1'	96	96	0.04844	118.9828	'GEN539945 1-FLATRWDWG1 0.6900'
13G	03ALL	'TO->FROM'	'FLATRDG3 - MEDICINE LODGE 138KV CKT 1'	96	96	0.04844	118.9828	'GEN539945 1-FLATRWDWG1 0.6900'
13G	03ALL	'TO->FROM'	'FLATRDG3 - MEDICINE LODGE 138KV CKT 1'	96	96	0.2104	118.9828	'GEN539945 1-FLATRWDWG1 0.6900'
13G	03ALL	'TO->FROM'	'FLATRDG3 - MEDICINE LODGE 138KV CKT 1'	96	96	0.03753	118.9828	'GEN539945 1-FLATRWDWG1 0.6900'
13G	03ALL	'TO->FROM'	'FLATRDG3 - MEDICINE LODGE 138KV CKT 1'	96	96	0.0394	118.9828	'GEN539945 1-FLATRWDWG1 0.6900'
13G	03ALL	'TO->FROM'	'FLATRDG3 - MEDICINE LODGE 138KV CKT 1'	96	96	0.0394	118.9828	'GEN539945 1-FLATRWDWG1 0.6900'
13G	03ALL	'TO->FROM'	'FLATRDG3 - MEDICINE LODGE 138KV CKT 1'	96	96	0.03696	118.9828	'GEN539945 1-FLATRWDWG1 0.6900'
13G	03ALL	'TO->FROM'	'FLATRDG3 - MEDICINE LODGE 138KV CKT 1'	96	96	0.04265	118.9828	'GEN539945 1-FLATRWDWG1 0.6900'
13G	03ALL	'TO->FROM'	'FLATRDG3 - MEDICINE LODGE 138KV CKT 1'	96	96	0.03608	118.9828	'GEN539945 1-FLATRWDWG1 0.6900'
13G	03ALL	'FROM->TO'	'GREENSBURG - SUN CITY 115KV CKT 1'	120.7	129.5	0.17753	113.2984	'GEN539945 1-FLATRWDWG1 0.6900'
13G	03ALL	'FROM->TO'	'GREENSBURG - SUN CITY 115KV CKT 1'	120.7	129.5	0.04472	113.2984	'GEN539945 1-FLATRWDWG1 0.6900'
13G	03ALL	'FROM->TO'	'GREENSBURG - SUN CITY 115KV CKT 1'	120.7	129.5	0.04472	113.2984	'GEN539945 1-FLATRWDWG1 0.6900'
13G	03ALL	'FROM->TO'	'GREENSBURG - SUN CITY 115KV CKT 1'	120.7	129.5	0.39904	113.2984	'GEN539945 1-FLATRWDWG1 0.6900'
13G	03ALL	'FROM->TO'	'GREENSBURG - SUN CITY 115KV CKT 1'	120.7	129.5	0.0299	113.2984	'GEN539945 1-FLATRWDWG1 0.6900'
13G	03ALL	'FROM->TO'	'GREENSBURG - SUN CITY 115KV CKT 1'	120.7	129.5	0.03411	113.2984	'GEN539945 1-FLATRWDWG1 0.6900'
13G	03ALL	'FROM->TO'	'GREENSBURG - SUN CITY 115KV CKT 1'	120.7	129.5	0.03411	113.2984	'GEN539945 1-FLATRWDWG1 0.6900'
13G	03ALL	'FROM->TO'	'GREENSBURG - SUN CITY 115KV CKT 1'	120.7	129.5	0.02996	113.2984	'GEN539945 1-FLATRWDWG1 0.6900'
13G	03ALL	'FROM->TO'	'GREENSBURG - SUN CITY 115KV CKT 1'	120.7	129.5	0.03691	113.2984	'GEN539945 1-FLATRWDWG1 0.6900'
13G	03ALL	'FROM->TO'	'GREENSBURG - SUN CITY 115KV CKT 1'	120.7	129.5	0.03126	113.2984	'GEN539945 1-FLATRWDWG1 0.6900'
13G	03ALL	'TO->FROM'	'GREENSBURG - SSTARTP3 115.00 115KV CKT 1	120.7	129.5	0.17753	121.2014	'GEN539945 1-FLATRWDWG1 0.6900'
13G	03ALL	'TO->FROM'	'GREENSBURG - SSTARTP3 115.00 115KV CKT 1	120.7	129.5	0.04472	121.2014	'GEN539945 1-FLATRWDWG1 0.6900'
13G	03ALL	'TO->FROM'	'GREENSBURG - SSTARTP3 115.00 115KV CKT 1	120.7	129.5	0.04472	121.2014	'GEN539945 1-FLATRWDWG1 0.6900'

SEASON	GROUP	DIRECTION	MONITORED ELEMENT	RATE A (MVA)	RATE B (MVA)	TDF	TC%LOADING (%MVA)	CONTINGENCY NAME
13G	03ALL	'TO->FROM'	'GREENSBURG - SSTARTP3 115.00 115KV CKT 1	120.7	129.5	0.39904	121.2014	'GEN539945 1-FLATRWDWG1 0.6900'
13G	03ALL	'TO->FROM'	'GREENSBURG - SSTARTP3 115.00 115KV CKT 1	120.7	129.5	0.0299	121.2014	'GEN539945 1-FLATRWDWG1 0.6900'
13G	03ALL	'TO->FROM'	'GREENSBURG - SSTARTP3 115.00 115KV CKT 1	120.7	129.5	0.03411	121.2014	'GEN539945 1-FLATRWDWG1 0.6900'
13G	03ALL	'TO->FROM'	'GREENSBURG - SSTARTP3 115.00 115KV CKT 1	120.7	129.5	0.03411	121.2014	'GEN539945 1-FLATRWDWG1 0.6900'
13G	03ALL	'TO->FROM'	'GREENSBURG - SSTARTP3 115.00 115KV CKT 1	120.7	129.5	0.02996	121.2014	'GEN539945 1-FLATRWDWG1 0.6900'
13G	03ALL	'TO->FROM'	'GREENSBURG - SSTARTP3 115.00 115KV CKT 1	120.7	129.5	0.03691	121.2014	'GEN539945 1-FLATRWDWG1 0.6900'
13G	03ALL	'TO->FROM'	'GREENSBURG - SSTARTP3 115.00 115KV CKT 1	120.7	129.5	0.03126	121.2014	'GEN539945 1-FLATRWDWG1 0.6900'
13G	03ALL	'TO->FROM'	'MEDICINE LODGE - SUN CITY 115KV CKT 1'	120.7	129.5	0.17753	110.7374	'GEN539945 1-FLATRWDWG1 0.6900'
13G	03ALL	'TO->FROM'	'MEDICINE LODGE - SUN CITY 115KV CKT 1'	120.7	129.5	0.04472	110.7374	'GEN539945 1-FLATRWDWG1 0.6900'
13G	03ALL	'TO->FROM'	'MEDICINE LODGE - SUN CITY 115KV CKT 1'	120.7	129.5	0.04472	110.7374	'GEN539945 1-FLATRWDWG1 0.6900'
13G	03ALL	'TO->FROM'	'MEDICINE LODGE - SUN CITY 115KV CKT 1'	120.7	129.5	0.39904	110.7374	'GEN539945 1-FLATRWDWG1 0.6900'
13G	03ALL	'TO->FROM'	'MEDICINE LODGE - SUN CITY 115KV CKT 1'	120.7	129.5	0.0299	110.7374	'GEN539945 1-FLATRWDWG1 0.6900'
13G	03ALL	'TO->FROM'	'MEDICINE LODGE - SUN CITY 115KV CKT 1'	120.7	129.5	0.03411	110.7374	'GEN539945 1-FLATRWDWG1 0.6900'
13G	03ALL	'TO->FROM'	'MEDICINE LODGE - SUN CITY 115KV CKT 1'	120.7	129.5	0.03411	110.7374	'GEN539945 1-FLATRWDWG1 0.6900'
13G	03ALL	'TO->FROM'	'MEDICINE LODGE - SUN CITY 115KV CKT 1'	120.7	129.5	0.02996	110.7374	'GEN539945 1-FLATRWDWG1 0.6900'
13G	03ALL	'TO->FROM'	'MEDICINE LODGE - SUN CITY 115KV CKT 1'	120.7	129.5	0.03691	110.7374	'GEN539945 1-FLATRWDWG1 0.6900'
13G	03ALL	'TO->FROM'	'MEDICINE LODGE - SUN CITY 115KV CKT 1'	120.7	129.5	0.03126	110.7374	'GEN539945 1-FLATRWDWG1 0.6900'
13G	03ALL	'TO->FROM'	'BARBER 3 115.00 - MEDICINE LODGE 115KV CKT 1'	79.7	79.7	0.11605	123.1664	'GEN539945 1-FLATRWDWG1 0.6900'
13G	03ALL	'TO->FROM'	'BARBER 3 115.00 - MEDICINE LODGE 115KV CKT 1'	79.7	79.7	0.03487	123.1664	'GEN539945 1-FLATRWDWG1 0.6900'
13G	03ALL	'TO->FROM'	'BARBER 3 115.00 - MEDICINE LODGE 115KV CKT 1'	79.7	79.7	0.03487	123.1664	'GEN539945 1-FLATRWDWG1 0.6900'
13G	03ALL	'TO->FROM'	'BARBER 3 115.00 - MEDICINE LODGE 115KV CKT 1'	79.7	79.7	0.25191	123.1664	'GEN539945 1-FLATRWDWG1 0.6900'
13G	03ALL	'FROM->TO'	'SMOKYHL6 230.00 - SUMMIT 230KV CKT 1'	319	319	0.18549	106.5646	'GEN541151 3-SIBLEY GENERATING UNIT #3'
13G	03ALL	'FROM->TO'	'SMOKYHL6 230.00 - SUMMIT 230KV CKT 1'	319	319	0.08979	106.5646	'GEN541151 3-SIBLEY GENERATING UNIT #3'
13G	03ALL	'FROM->TO'	'SMOKYHL6 230.00 - SUMMIT 230KV CKT 1'	319	319	0.10326	106.5646	'GEN541151 3-SIBLEY GENERATING UNIT #3'
13G	03ALL	'FROM->TO'	'SMOKYHL6 230.00 - SUMMIT 230KV CKT 1'	319	319	0.12225	106.5646	'GEN541151 3-SIBLEY GENERATING UNIT #3'
13G	03ALL	'FROM->TO'	'SMOKYHL6 230.00 - SUMMIT 230KV CKT 1'	319	319	0.12225	106.5646	'GEN541151 3-SIBLEY GENERATING UNIT #3'
13G	03ALL	'FROM->TO'	'SMOKYHL6 230.00 - SUMMIT 230KV CKT 1'	319	319	0.07803	106.5646	'GEN541151 3-SIBLEY GENERATING UNIT #3'
13G	03ALL	'FROM->TO'	'SMOKYHL6 230.00 - SUMMIT 230KV CKT 1'	319	319	0.09991	106.5646	'GEN541151 3-SIBLEY GENERATING UNIT #3'
13G	03ALL	'FROM->TO'	'SMOKYHL6 230.00 - SUMMIT 230KV CKT 1'	319	319	0.11509	106.5646	'GEN541151 3-SIBLEY GENERATING UNIT #3'
13G	03ALL	'FROM->TO'	'SMOKYHL6 230.00 - SUMMIT 230KV CKT 1'	319	319	0.11509	106.5646	'GEN541151 3-SIBLEY GENERATING UNIT #3'
13G	03ALL	'FROM->TO'	'SMOKYHL6 230.00 - SUMMIT 230KV CKT 1'	319	319	0.62637	106.5646	'GEN541151 3-SIBLEY GENERATING UNIT #3'
13G	03ALL	'FROM->TO'	'SMOKYHL6 230.00 - SUMMIT 230KV CKT 1'	319	319	0.09991	106.5646	'GEN541151 3-SIBLEY GENERATING UNIT #3'
13G	03ALL	'FROM->TO'	'SMOKYHL6 230.00 - SUMMIT 230KV CKT 1'	319	319	0.1274	106.5646	'GEN541151 3-SIBLEY GENERATING UNIT #3'
13G	03ALL	'FROM->TO'	'SMOKYHL6 230.00 - SUMMIT 230KV CKT 1'	319	319	0.10261	106.5646	'GEN541151 3-SIBLEY GENERATING UNIT #3'
13G	03ALL	'FROM->TO'	'SMOKYHL6 230.00 - SUMMIT 230KV CKT 1'	319	319	0.18549	107.108	'GEN542951 5-HAWTHORN UNIT #5'
13G	03ALL	'FROM->TO'	'SMOKYHL6 230.00 - SUMMIT 230KV CKT 1'	319	319	0.08979	107.108	'GEN542951 5-HAWTHORN UNIT #5'
13G	03ALL	'FROM->TO'	'SMOKYHL6 230.00 - SUMMIT 230KV CKT 1'	319	319	0.10326	107.108	'GEN542951 5-HAWTHORN UNIT #5'
13G	03ALL	'FROM->TO'	'SMOKYHL6 230.00 - SUMMIT 230KV CKT 1'	319	319	0.12225	107.108	'GEN542951 5-HAWTHORN UNIT #5'
13G	03ALL	'FROM->TO'	'SMOKYHL6 230.00 - SUMMIT 230KV CKT 1'	319	319	0.12225	107.108	'GEN542951 5-HAWTHORN UNIT #5'
13G	03ALL	'FROM->TO'	'SMOKYHL6 230.00 - SUMMIT 230KV CKT 1'	319	319	0.07803	107.108	'GEN542951 5-HAWTHORN UNIT #5'
13G	03ALL	'FROM->TO'	'SMOKYHL6 230.00 - SUMMIT 230KV CKT 1'	319	319	0.09991	107.108	'GEN542951 5-HAWTHORN UNIT #5'
13G	03ALL	'FROM->TO'	'SMOKYHL6 230.00 - SUMMIT 230KV CKT 1'	319	319	0.11509	107.108	'GEN542951 5-HAWTHORN UNIT #5'
13G	03ALL	'FROM->TO'	'SMOKYHL6 230.00 - SUMMIT 230KV CKT 1'	319	319	0.11509	107.108	'GEN542951 5-HAWTHORN UNIT #5'
13G	03ALL	'FROM->TO'	'SMOKYHL6 230.00 - SUMMIT 230KV CKT 1'	319	319	0.62637	107.108	'GEN542951 5-HAWTHORN UNIT #5'
13G	03ALL	'FROM->TO'	'SMOKYHL6 230.00 - SUMMIT 230KV CKT 1'	319	319	0.09991	107.108	'GEN542951 5-HAWTHORN UNIT #5'
13G	03ALL	'FROM->TO'	'SMOKYHL6 230.00 - SUMMIT 230KV CKT 1'	319	319	0.1274	107.108	'GEN542951 5-HAWTHORN UNIT #5'
13G	03ALL	'FROM->TO'	'SMOKYHL6 230.00 - SUMMIT 230KV CKT 1'	319	319	0.10261	107.108	'GEN542951 5-HAWTHORN UNIT #5'
13G	03ALL	'FROM->TO'	'SMOKYHL6 230.00 - SUMMIT 230KV CKT 1'	319	319	0.18549	108.617	'GEN542955 1-LACYGNE UNIT #1'
13G	03ALL	'FROM->TO'	'SMOKYHL6 230.00 - SUMMIT 230KV CKT 1'	319	319	0.08979	108.617	'GEN542955 1-LACYGNE UNIT #1'
13G	03ALL	'FROM->TO'	'SMOKYHL6 230.00 - SUMMIT 230KV CKT 1'	319	319	0.10326	108.617	'GEN542955 1-LACYGNE UNIT #1'
13G	03ALL	'FROM->TO'	'SMOKYHL6 230.00 - SUMMIT 230KV CKT 1'	319	319	0.12225	108.617	'GEN542955 1-LACYGNE UNIT #1'
13G	03ALL	'FROM->TO'	'SMOKYHL6 230.00 - SUMMIT 230KV CKT 1'	319	319	0.12225	108.617	'GEN542955 1-LACYGNE UNIT #1'
13G	03ALL	'FROM->TO'	'SMOKYHL6 230.00 - SUMMIT 230KV CKT 1'	319	319	0.07803	108.617	'GEN542955 1-LACYGNE UNIT #1'
13G	03ALL	'FROM->TO'	'SMOKYHL6 230.00 - SUMMIT 230KV CKT 1'	319	319	0.09991	108.617	'GEN542955 1-LACYGNE UNIT #1'
13G	03ALL	'FROM->TO'	'SMOKYHL6 230.00 - SUMMIT 230KV CKT 1'	319	319	0.11509	108.617	'GEN542955 1-LACYGNE UNIT #1'
13G	03ALL	'FROM->TO'	'SMOKYHL6 230.00 - SUMMIT 230KV CKT 1'	319	319	0.11509	108.617	'GEN542955 1-LACYGNE UNIT #1'
13G	03ALL	'FROM->TO'	'SMOKYHL6 230.00 - SUMMIT 230KV CKT 1'	319	319	0.62637	108.617	'GEN542955 1-LACYGNE UNIT #1'
13G	03ALL	'FROM->TO'	'SMOKYHL6 230.00 - SUMMIT 230KV CKT 1'	319	319	0.09991	108.617	'GEN542955 1-LACYGNE UNIT #1'
13G	03ALL	'FROM->TO'	'SMOKYHL6 230.00 - SUMMIT 230KV CKT 1'	319	319	0.1274	108.617	'GEN542955 1-LACYGNE UNIT #1'
13G	03ALL	'FROM->TO'	'SMOKYHL6 230.00 - SUMMIT 230KV CKT 1'	319	319	0.10261	108.617	'GEN542955 1-LACYGNE UNIT #1'
13G	03ALL	'FROM->TO'	'SMOKYHL6 230.00 - SUMMIT 230KV CKT 1'	319	319	0.18549	108.6082	'GEN542956 2-LACYGNE UNIT #2'
13G	03ALL	'FROM->TO'	'SMOKYHL6 230.00 - SUMMIT 230KV CKT 1'	319	319	0.08979	108.6082	'GEN542956 2-LACYGNE UNIT #2'
13G	03ALL	'FROM->TO'	'SMOKYHL6 230.00 - SUMMIT 230KV CKT 1'	319	319	0.10326	108.6082	'GEN542956 2-LACYGNE UNIT #2'
13G	03ALL	'FROM->TO'	'SMOKYHL6 230.00 - SUMMIT 230KV CKT 1'	319	319	0.12225	108.6082	'GEN542956 2-LACYGNE UNIT #2'

SEASON	GROUP	DIRECTION	MONITORED ELEMENT	RATE A (MVA)	RATE B (MVA)	TDF	TC%LOADING (%MVA)	CONTINGENCY NAME
13G	03ALL	'FROM->TO'	'SMOKYHL6 230.00 - SUMMIT 230KV CKT 1'	319	319	0.12225	108.6082	'GEN542956 2-LACYGNE UNIT #2'
13G	03ALL	'FROM->TO'	'SMOKYHL6 230.00 - SUMMIT 230KV CKT 1'	319	319	0.07803	108.6082	'GEN542956 2-LACYGNE UNIT #2'
13G	03ALL	'FROM->TO'	'SMOKYHL6 230.00 - SUMMIT 230KV CKT 1'	319	319	0.09991	108.6082	'GEN542956 2-LACYGNE UNIT #2'
13G	03ALL	'FROM->TO'	'SMOKYHL6 230.00 - SUMMIT 230KV CKT 1'	319	319	0.11509	108.6082	'GEN542956 2-LACYGNE UNIT #2'
13G	03ALL	'FROM->TO'	'SMOKYHL6 230.00 - SUMMIT 230KV CKT 1'	319	319	0.11509	108.6082	'GEN542956 2-LACYGNE UNIT #2'
13G	03ALL	'FROM->TO'	'SMOKYHL6 230.00 - SUMMIT 230KV CKT 1'	319	319	0.62637	108.6082	'GEN542956 2-LACYGNE UNIT #2'
13G	03ALL	'FROM->TO'	'SMOKYHL6 230.00 - SUMMIT 230KV CKT 1'	319	319	0.09991	108.6082	'GEN542956 2-LACYGNE UNIT #2'
13G	03ALL	'FROM->TO'	'SMOKYHL6 230.00 - SUMMIT 230KV CKT 1'	319	319	0.1274	108.6082	'GEN542956 2-LACYGNE UNIT #2'
13G	03ALL	'FROM->TO'	'SMOKYHL6 230.00 - SUMMIT 230KV CKT 1'	319	319	0.10261	108.6082	'GEN542956 2-LACYGNE UNIT #2'
13G	03ALL	'FROM->TO'	'SMOKYHL6 230.00 - SUMMIT 230KV CKT 1'	319	319	0.18549	107.5788	'GEN542957 1-IATAN UNIT #1'
13G	03ALL	'FROM->TO'	'SMOKYHL6 230.00 - SUMMIT 230KV CKT 1'	319	319	0.08979	107.5788	'GEN542957 1-IATAN UNIT #1'
13G	03ALL	'FROM->TO'	'SMOKYHL6 230.00 - SUMMIT 230KV CKT 1'	319	319	0.10326	107.5788	'GEN542957 1-IATAN UNIT #1'
13G	03ALL	'FROM->TO'	'SMOKYHL6 230.00 - SUMMIT 230KV CKT 1'	319	319	0.12225	107.5788	'GEN542957 1-IATAN UNIT #1'
13G	03ALL	'FROM->TO'	'SMOKYHL6 230.00 - SUMMIT 230KV CKT 1'	319	319	0.12225	107.5788	'GEN542957 1-IATAN UNIT #1'
13G	03ALL	'FROM->TO'	'SMOKYHL6 230.00 - SUMMIT 230KV CKT 1'	319	319	0.07803	107.5788	'GEN542957 1-IATAN UNIT #1'
13G	03ALL	'FROM->TO'	'SMOKYHL6 230.00 - SUMMIT 230KV CKT 1'	319	319	0.09991	107.5788	'GEN542957 1-IATAN UNIT #1'
13G	03ALL	'FROM->TO'	'SMOKYHL6 230.00 - SUMMIT 230KV CKT 1'	319	319	0.11509	107.5788	'GEN542957 1-IATAN UNIT #1'
13G	03ALL	'FROM->TO'	'SMOKYHL6 230.00 - SUMMIT 230KV CKT 1'	319	319	0.11509	107.5788	'GEN542957 1-IATAN UNIT #1'
13G	03ALL	'FROM->TO'	'SMOKYHL6 230.00 - SUMMIT 230KV CKT 1'	319	319	0.62637	107.5788	'GEN542957 1-IATAN UNIT #1'
13G	03ALL	'FROM->TO'	'SMOKYHL6 230.00 - SUMMIT 230KV CKT 1'	319	319	0.09991	107.5788	'GEN542957 1-IATAN UNIT #1'
13G	03ALL	'FROM->TO'	'SMOKYHL6 230.00 - SUMMIT 230KV CKT 1'	319	319	0.1274	107.5788	'GEN542957 1-IATAN UNIT #1'
13G	03ALL	'FROM->TO'	'SMOKYHL6 230.00 - SUMMIT 230KV CKT 1'	319	319	0.10261	107.5788	'GEN542957 1-IATAN UNIT #1'
13G	03ALL	'FROM->TO'	'SMOKYHL6 230.00 - SUMMIT 230KV CKT 1'	319	319	0.18549	108.3016	'GEN542962 2-IATAN UNIT #2'
13G	03ALL	'FROM->TO'	'SMOKYHL6 230.00 - SUMMIT 230KV CKT 1'	319	319	0.08979	108.3016	'GEN542962 2-IATAN UNIT #2'
13G	03ALL	'FROM->TO'	'SMOKYHL6 230.00 - SUMMIT 230KV CKT 1'	319	319	0.10326	108.3016	'GEN542962 2-IATAN UNIT #2'
13G	03ALL	'FROM->TO'	'SMOKYHL6 230.00 - SUMMIT 230KV CKT 1'	319	319	0.12225	108.3016	'GEN542962 2-IATAN UNIT #2'
13G	03ALL	'FROM->TO'	'SMOKYHL6 230.00 - SUMMIT 230KV CKT 1'	319	319	0.12225	108.3016	'GEN542962 2-IATAN UNIT #2'
13G	03ALL	'FROM->TO'	'SMOKYHL6 230.00 - SUMMIT 230KV CKT 1'	319	319	0.07803	108.3016	'GEN542962 2-IATAN UNIT #2'
13G	03ALL	'FROM->TO'	'SMOKYHL6 230.00 - SUMMIT 230KV CKT 1'	319	319	0.09991	108.3016	'GEN542962 2-IATAN UNIT #2'
13G	03ALL	'FROM->TO'	'SMOKYHL6 230.00 - SUMMIT 230KV CKT 1'	319	319	0.11509	108.3016	'GEN542962 2-IATAN UNIT #2'
13G	03ALL	'FROM->TO'	'SMOKYHL6 230.00 - SUMMIT 230KV CKT 1'	319	319	0.11509	108.3016	'GEN542962 2-IATAN UNIT #2'
13G	03ALL	'FROM->TO'	'SMOKYHL6 230.00 - SUMMIT 230KV CKT 1'	319	319	0.62637	108.3016	'GEN542962 2-IATAN UNIT #2'
13G	03ALL	'FROM->TO'	'SMOKYHL6 230.00 - SUMMIT 230KV CKT 1'	319	319	0.09991	108.3016	'GEN542962 2-IATAN UNIT #2'
13G	03ALL	'FROM->TO'	'SMOKYHL6 230.00 - SUMMIT 230KV CKT 1'	319	319	0.1274	108.3016	'GEN542962 2-IATAN UNIT #2'
13G	03ALL	'FROM->TO'	'SMOKYHL6 230.00 - SUMMIT 230KV CKT 1'	319	319	0.10261	108.3016	'GEN542962 2-IATAN UNIT #2'
13G	03ALL	'FROM->TO'	'SMOKYHL6 230.00 - SUMMIT 230KV CKT 1'	319	319	0.18549	106.3471	'GEN546702 1-NM GEN N1'
13G	03ALL	'FROM->TO'	'SMOKYHL6 230.00 - SUMMIT 230KV CKT 1'	319	319	0.08979	106.3471	'GEN546702 1-NM GEN N1'
13G	03ALL	'FROM->TO'	'SMOKYHL6 230.00 - SUMMIT 230KV CKT 1'	319	319	0.10326	106.3471	'GEN546702 1-NM GEN N1'
13G	03ALL	'FROM->TO'	'SMOKYHL6 230.00 - SUMMIT 230KV CKT 1'	319	319	0.12225	106.3471	'GEN546702 1-NM GEN N1'
13G	03ALL	'FROM->TO'	'SMOKYHL6 230.00 - SUMMIT 230KV CKT 1'	319	319	0.12225	106.3471	'GEN546702 1-NM GEN N1'
13G	03ALL	'FROM->TO'	'SMOKYHL6 230.00 - SUMMIT 230KV CKT 1'	319	319	0.07803	106.3471	'GEN546702 1-NM GEN N1'
13G	03ALL	'FROM->TO'	'SMOKYHL6 230.00 - SUMMIT 230KV CKT 1'	319	319	0.09991	106.3471	'GEN546702 1-NM GEN N1'
13G	03ALL	'FROM->TO'	'SMOKYHL6 230.00 - SUMMIT 230KV CKT 1'	319	319	0.11509	106.3471	'GEN546702 1-NM GEN N1'
13G	03ALL	'FROM->TO'	'SMOKYHL6 230.00 - SUMMIT 230KV CKT 1'	319	319	0.11509	106.3471	'GEN546702 1-NM GEN N1'
13G	03ALL	'FROM->TO'	'SMOKYHL6 230.00 - SUMMIT 230KV CKT 1'	319	319	0.62637	106.3471	'GEN546702 1-NM GEN N1'
13G	03ALL	'FROM->TO'	'SMOKYHL6 230.00 - SUMMIT 230KV CKT 1'	319	319	0.09991	106.3471	'GEN546702 1-NM GEN N1'
13G	03ALL	'FROM->TO'	'SMOKYHL6 230.00 - SUMMIT 230KV CKT 1'	319	319	0.1274	106.3471	'GEN546702 1-NM GEN N1'
13G	03ALL	'FROM->TO'	'SMOKYHL6 230.00 - SUMMIT 230KV CKT 1'	319	319	0.10261	106.3471	'GEN546702 1-NM GEN N1'
13G	03ALL	'TO->FROM'	'CLEARWATER - MILAN TAP 138KV CKT 1'	110	110	0.03559	116.6379	'GEN560140 1-G09-08 0.7000
13G	03ALL	'TO->FROM'	'CLEARWATER - MILAN TAP 138KV CKT 1'	110	110	0.06218	116.6379	'GEN560140 1-G09-08 0.7000
13G	03ALL	'TO->FROM'	'CLEARWATER - MILAN TAP 138KV CKT 1'	110	110	0.10851	116.6379	'GEN560140 1-G09-08 0.7000
13G	03ALL	'TO->FROM'	'CLEARWATER - MILAN TAP 138KV CKT 1'	110	110	0.04844	116.6379	'GEN560140 1-G09-08 0.7000
13G	03ALL	'TO->FROM'	'CLEARWATER - MILAN TAP 138KV CKT 1'	110	110	0.04844	116.6379	'GEN560140 1-G09-08 0.7000
13G	03ALL	'TO->FROM'	'CLEARWATER - MILAN TAP 138KV CKT 1'	110	110	0.2104	116.6379	'GEN560140 1-G09-08 0.7000
13G	03ALL	'TO->FROM'	'CLEARWATER - MILAN TAP 138KV CKT 1'	110	110	0.03753	116.6379	'GEN560140 1-G09-08 0.7000
13G	03ALL	'TO->FROM'	'CLEARWATER - MILAN TAP 138KV CKT 1'	110	110	0.0394	116.6379	'GEN560140 1-G09-08 0.7000
13G	03ALL	'TO->FROM'	'CLEARWATER - MILAN TAP 138KV CKT 1'	110	110	0.0394	116.6379	'GEN560140 1-G09-08 0.7000
13G	03ALL	'TO->FROM'	'CLEARWATER - MILAN TAP 138KV CKT 1'	110	110	0.52726	116.6379	'GEN560140 1-G09-08 0.7000
13G	03ALL	'TO->FROM'	'CLEARWATER - MILAN TAP 138KV CKT 1'	110	110	0.03696	116.6379	'GEN560140 1-G09-08 0.7000
13G	03ALL	'TO->FROM'	'CLEARWATER - MILAN TAP 138KV CKT 1'	110	110	0.04265	116.6379	'GEN560140 1-G09-08 0.7000
13G	03ALL	'TO->FROM'	'CLEARWATER - MILAN TAP 138KV CKT 1'	110	110	0.03608	116.6379	'GEN560140 1-G09-08 0.7000
13G	03ALL	'FROM->TO'	'HARPER - MILAN TAP 138KV CKT 1'	95.6	95.6	0.03559	141.5889	'GEN560140 1-G09-08 0.7000
13G	03ALL	'FROM->TO'	'HARPER - MILAN TAP 138KV CKT 1'	95.6	95.6	0.06218	141.5889	'GEN560140 1-G09-08 0.7000
13G	03ALL	'FROM->TO'	'HARPER - MILAN TAP 138KV CKT 1'	95.6	95.6	0.10851	141.5889	'GEN560140 1-G09-08 0.7000

SEASON	GROUP	DIRECTION	MONITORED ELEMENT	RATE A (MVA)	RATE B (MVA)	TDF	TC%LOADING (%MVA)	CONTINGENCY NAME	
13G	03ALL	'FROM->TO'	'HARPER - MILAN TAP 138KV CKT 1'	95.6	95.6	0.04844	141.5889	'GEN560140 1-G09-08	0.7000
13G	03ALL	'FROM->TO'	'HARPER - MILAN TAP 138KV CKT 1'	95.6	95.6	0.04844	141.5889	'GEN560140 1-G09-08	0.7000
13G	03ALL	'FROM->TO'	'HARPER - MILAN TAP 138KV CKT 1'	95.6	95.6	0.2104	141.5889	'GEN560140 1-G09-08	0.7000
13G	03ALL	'FROM->TO'	'HARPER - MILAN TAP 138KV CKT 1'	95.6	95.6	0.03753	141.5889	'GEN560140 1-G09-08	0.7000
13G	03ALL	'FROM->TO'	'HARPER - MILAN TAP 138KV CKT 1'	95.6	95.6	0.0394	141.5889	'GEN560140 1-G09-08	0.7000
13G	03ALL	'FROM->TO'	'HARPER - MILAN TAP 138KV CKT 1'	95.6	95.6	0.0394	141.5889	'GEN560140 1-G09-08	0.7000
13G	03ALL	'FROM->TO'	'HARPER - MILAN TAP 138KV CKT 1'	95.6	95.6	0.52726	141.5889	'GEN560140 1-G09-08	0.7000
13G	03ALL	'FROM->TO'	'HARPER - MILAN TAP 138KV CKT 1'	95.6	95.6	0.03696	141.5889	'GEN560140 1-G09-08	0.7000
13G	03ALL	'FROM->TO'	'HARPER - MILAN TAP 138KV CKT 1'	95.6	95.6	0.04265	141.5889	'GEN560140 1-G09-08	0.7000
13G	03ALL	'FROM->TO'	'HARPER - MILAN TAP 138KV CKT 1'	95.6	95.6	0.03608	141.5889	'GEN560140 1-G09-08	0.7000
13G	03ALL	'FROM->TO'	'SMOKYHL6 230.00 - SUMMIT 230KV CKT 1'	319	319	0.18549	100.1614	'GEN560209 1-G07-40	0.5750
13G	03ALL	'FROM->TO'	'SMOKYHL6 230.00 - SUMMIT 230KV CKT 1'	319	319	0.08979	100.1614	'GEN560209 1-G07-40	0.5750
13G	03ALL	'FROM->TO'	'SMOKYHL6 230.00 - SUMMIT 230KV CKT 1'	319	319	0.10326	100.1614	'GEN560209 1-G07-40	0.5750
13G	03ALL	'FROM->TO'	'SMOKYHL6 230.00 - SUMMIT 230KV CKT 1'	319	319	0.12225	100.1614	'GEN560209 1-G07-40	0.5750
13G	03ALL	'FROM->TO'	'SMOKYHL6 230.00 - SUMMIT 230KV CKT 1'	319	319	0.12225	100.1614	'GEN560209 1-G07-40	0.5750
13G	03ALL	'FROM->TO'	'SMOKYHL6 230.00 - SUMMIT 230KV CKT 1'	319	319	0.07803	100.1614	'GEN560209 1-G07-40	0.5750
13G	03ALL	'FROM->TO'	'SMOKYHL6 230.00 - SUMMIT 230KV CKT 1'	319	319	0.09991	100.1614	'GEN560209 1-G07-40	0.5750
13G	03ALL	'FROM->TO'	'SMOKYHL6 230.00 - SUMMIT 230KV CKT 1'	319	319	0.11509	100.1614	'GEN560209 1-G07-40	0.5750
13G	03ALL	'FROM->TO'	'SMOKYHL6 230.00 - SUMMIT 230KV CKT 1'	319	319	0.11509	100.1614	'GEN560209 1-G07-40	0.5750
13G	03ALL	'FROM->TO'	'SMOKYHL6 230.00 - SUMMIT 230KV CKT 1'	319	319	0.62637	100.1614	'GEN560209 1-G07-40	0.5750
13G	03ALL	'FROM->TO'	'SMOKYHL6 230.00 - SUMMIT 230KV CKT 1'	319	319	0.09991	100.1614	'GEN560209 1-G07-40	0.5750
13G	03ALL	'FROM->TO'	'SMOKYHL6 230.00 - SUMMIT 230KV CKT 1'	319	319	0.1274	100.1614	'GEN560209 1-G07-40	0.5750
13G	03ALL	'FROM->TO'	'SMOKYHL6 230.00 - SUMMIT 230KV CKT 1'	319	319	0.10261	100.1614	'GEN560209 1-G07-40	0.5750
13G	03ALL	'TO->FROM'	'CLEARWATER - MILAN TAP 138KV CKT 1'	110	110	0.03559	118.5363	'GEN560209 1-G07-40	0.5750
13G	03ALL	'TO->FROM'	'CLEARWATER - MILAN TAP 138KV CKT 1'	110	110	0.06218	118.5363	'GEN560209 1-G07-40	0.5750
13G	03ALL	'TO->FROM'	'CLEARWATER - MILAN TAP 138KV CKT 1'	110	110	0.10851	118.5363	'GEN560209 1-G07-40	0.5750
13G	03ALL	'TO->FROM'	'CLEARWATER - MILAN TAP 138KV CKT 1'	110	110	0.04844	118.5363	'GEN560209 1-G07-40	0.5750
13G	03ALL	'TO->FROM'	'CLEARWATER - MILAN TAP 138KV CKT 1'	110	110	0.04844	118.5363	'GEN560209 1-G07-40	0.5750
13G	03ALL	'TO->FROM'	'CLEARWATER - MILAN TAP 138KV CKT 1'	110	110	0.2104	118.5363	'GEN560209 1-G07-40	0.5750
13G	03ALL	'TO->FROM'	'CLEARWATER - MILAN TAP 138KV CKT 1'	110	110	0.03753	118.5363	'GEN560209 1-G07-40	0.5750
13G	03ALL	'TO->FROM'	'CLEARWATER - MILAN TAP 138KV CKT 1'	110	110	0.0394	118.5363	'GEN560209 1-G07-40	0.5750
13G	03ALL	'TO->FROM'	'CLEARWATER - MILAN TAP 138KV CKT 1'	110	110	0.0394	118.5363	'GEN560209 1-G07-40	0.5750
13G	03ALL	'TO->FROM'	'CLEARWATER - MILAN TAP 138KV CKT 1'	110	110	0.52726	118.5363	'GEN560209 1-G07-40	0.5750
13G	03ALL	'TO->FROM'	'CLEARWATER - MILAN TAP 138KV CKT 1'	110	110	0.03696	118.5363	'GEN560209 1-G07-40	0.5750
13G	03ALL	'TO->FROM'	'CLEARWATER - MILAN TAP 138KV CKT 1'	110	110	0.04265	118.5363	'GEN560209 1-G07-40	0.5750
13G	03ALL	'TO->FROM'	'CLEARWATER - MILAN TAP 138KV CKT 1'	110	110	0.03608	118.5363	'GEN560209 1-G07-40	0.5750
13G	03ALL	'TO->FROM'	'GREENSBURG - SSTARTP3 115.00 115KV CKT 1	120.7	129.5	0.17753	103.3253	'GEN560209 1-G07-40	0.5750
13G	03ALL	'TO->FROM'	'GREENSBURG - SSTARTP3 115.00 115KV CKT 1	120.7	129.5	0.04472	103.3253	'GEN560209 1-G07-40	0.5750
13G	03ALL	'TO->FROM'	'GREENSBURG - SSTARTP3 115.00 115KV CKT 1	120.7	129.5	0.04472	103.3253	'GEN560209 1-G07-40	0.5750
13G	03ALL	'TO->FROM'	'GREENSBURG - SSTARTP3 115.00 115KV CKT 1	120.7	129.5	0.39904	103.3253	'GEN560209 1-G07-40	0.5750
13G	03ALL	'TO->FROM'	'GREENSBURG - SSTARTP3 115.00 115KV CKT 1	120.7	129.5	0.0299	103.3253	'GEN560209 1-G07-40	0.5750
13G	03ALL	'TO->FROM'	'GREENSBURG - SSTARTP3 115.00 115KV CKT 1	120.7	129.5	0.03411	103.3253	'GEN560209 1-G07-40	0.5750
13G	03ALL	'TO->FROM'	'GREENSBURG - SSTARTP3 115.00 115KV CKT 1	120.7	129.5	0.03411	103.3253	'GEN560209 1-G07-40	0.5750
13G	03ALL	'TO->FROM'	'GREENSBURG - SSTARTP3 115.00 115KV CKT 1	120.7	129.5	0.02996	103.3253	'GEN560209 1-G07-40	0.5750
13G	03ALL	'TO->FROM'	'GREENSBURG - SSTARTP3 115.00 115KV CKT 1	120.7	129.5	0.03691	103.3253	'GEN560209 1-G07-40	0.5750
13G	03ALL	'TO->FROM'	'GREENSBURG - SSTARTP3 115.00 115KV CKT 1	120.7	129.5	0.03126	103.3253	'GEN560209 1-G07-40	0.5750
13G	03ALL	'FROM->TO'	'HARPER - MILAN TAP 138KV CKT 1'	95.6	95.6	0.03559	143.7687	'GEN560209 1-G07-40	0.5750
13G	03ALL	'FROM->TO'	'HARPER - MILAN TAP 138KV CKT 1'	95.6	95.6	0.06218	143.7687	'GEN560209 1-G07-40	0.5750
13G	03ALL	'FROM->TO'	'HARPER - MILAN TAP 138KV CKT 1'	95.6	95.6	0.10851	143.7687	'GEN560209 1-G07-40	0.5750
13G	03ALL	'FROM->TO'	'HARPER - MILAN TAP 138KV CKT 1'	95.6	95.6	0.04844	143.7687	'GEN560209 1-G07-40	0.5750
13G	03ALL	'FROM->TO'	'HARPER - MILAN TAP 138KV CKT 1'	95.6	95.6	0.04844	143.7687	'GEN560209 1-G07-40	0.5750
13G	03ALL	'FROM->TO'	'HARPER - MILAN TAP 138KV CKT 1'	95.6	95.6	0.2104	143.7687	'GEN560209 1-G07-40	0.5750
13G	03ALL	'FROM->TO'	'HARPER - MILAN TAP 138KV CKT 1'	95.6	95.6	0.03753	143.7687	'GEN560209 1-G07-40	0.5750
13G	03ALL	'FROM->TO'	'HARPER - MILAN TAP 138KV CKT 1'	95.6	95.6	0.0394	143.7687	'GEN560209 1-G07-40	0.5750
13G	03ALL	'FROM->TO'	'HARPER - MILAN TAP 138KV CKT 1'	95.6	95.6	0.0394	143.7687	'GEN560209 1-G07-40	0.5750
13G	03ALL	'FROM->TO'	'HARPER - MILAN TAP 138KV CKT 1'	95.6	95.6	0.52726	143.7687	'GEN560209 1-G07-40	0.5750
13G	03ALL	'FROM->TO'	'HARPER - MILAN TAP 138KV CKT 1'	95.6	95.6	0.03696	143.7687	'GEN560209 1-G07-40	0.5750
13G	03ALL	'FROM->TO'	'HARPER - MILAN TAP 138KV CKT 1'	95.6	95.6	0.04265	143.7687	'GEN560209 1-G07-40	0.5750
13G	03ALL	'FROM->TO'	'HARPER - MILAN TAP 138KV CKT 1'	95.6	95.6	0.03608	143.7687	'GEN560209 1-G07-40	0.5750
13G	03ALL	'FROM->TO'	'SMOKYHL6 230.00 - SUMMIT 230KV CKT 1'	319	319	0.18549	101.9357	'GEN560232 1-G08-79	0.5750
13G	03ALL	'FROM->TO'	'SMOKYHL6 230.00 - SUMMIT 230KV CKT 1'	319	319	0.08979	101.9357	'GEN560232 1-G08-79	0.5750
13G	03ALL	'FROM->TO'	'SMOKYHL6 230.00 - SUMMIT 230KV CKT 1'	319	319	0.10326	101.9357	'GEN560232 1-G08-79	0.5750
13G	03ALL	'FROM->TO'	'SMOKYHL6 230.00 - SUMMIT 230KV CKT 1'	319	319	0.12225	101.9357	'GEN560232 1-G08-79	0.5750
13G	03ALL	'FROM->TO'	'SMOKYHL6 230.00 - SUMMIT 230KV CKT 1'	319	319	0.12225	101.9357	'GEN560232 1-G08-79	0.5750

SEASON	GROUP	DIRECTION	MONITORED ELEMENT	RATE A (MVA)	RATE B (MVA)	TDF	TC%LOADING (%MVA)	CONTINGENCY NAME
13G	03ALL	'FROM->TO'	'SMOKYHL6 230.00 - SUMMIT 230KV CKT 1'	319	319	0.07803	101.9357	'GEN560232 1-G08-79 0.5750
13G	03ALL	'FROM->TO'	'SMOKYHL6 230.00 - SUMMIT 230KV CKT 1'	319	319	0.09991	101.9357	'GEN560232 1-G08-79 0.5750
13G	03ALL	'FROM->TO'	'SMOKYHL6 230.00 - SUMMIT 230KV CKT 1'	319	319	0.11509	101.9357	'GEN560232 1-G08-79 0.5750
13G	03ALL	'FROM->TO'	'SMOKYHL6 230.00 - SUMMIT 230KV CKT 1'	319	319	0.11509	101.9357	'GEN560232 1-G08-79 0.5750
13G	03ALL	'FROM->TO'	'SMOKYHL6 230.00 - SUMMIT 230KV CKT 1'	319	319	0.62637	101.9357	'GEN560232 1-G08-79 0.5750
13G	03ALL	'FROM->TO'	'SMOKYHL6 230.00 - SUMMIT 230KV CKT 1'	319	319	0.09991	101.9357	'GEN560232 1-G08-79 0.5750
13G	03ALL	'FROM->TO'	'SMOKYHL6 230.00 - SUMMIT 230KV CKT 1'	319	319	0.1274	101.9357	'GEN560232 1-G08-79 0.5750
13G	03ALL	'FROM->TO'	'SMOKYHL6 230.00 - SUMMIT 230KV CKT 1'	319	319	0.10261	101.9357	'GEN560232 1-G08-79 0.5750
13G	03ALL	'TO->FROM'	'CLEARWATER - MILAN TAP 138KV CKT 1'	110	110	0.03559	115.7207	'GEN560232 1-G08-79 0.5750
13G	03ALL	'TO->FROM'	'CLEARWATER - MILAN TAP 138KV CKT 1'	110	110	0.06218	115.7207	'GEN560232 1-G08-79 0.5750
13G	03ALL	'TO->FROM'	'CLEARWATER - MILAN TAP 138KV CKT 1'	110	110	0.10851	115.7207	'GEN560232 1-G08-79 0.5750
13G	03ALL	'TO->FROM'	'CLEARWATER - MILAN TAP 138KV CKT 1'	110	110	0.04844	115.7207	'GEN560232 1-G08-79 0.5750
13G	03ALL	'TO->FROM'	'CLEARWATER - MILAN TAP 138KV CKT 1'	110	110	0.04844	115.7207	'GEN560232 1-G08-79 0.5750
13G	03ALL	'TO->FROM'	'CLEARWATER - MILAN TAP 138KV CKT 1'	110	110	0.2104	115.7207	'GEN560232 1-G08-79 0.5750
13G	03ALL	'TO->FROM'	'CLEARWATER - MILAN TAP 138KV CKT 1'	110	110	0.03753	115.7207	'GEN560232 1-G08-79 0.5750
13G	03ALL	'TO->FROM'	'CLEARWATER - MILAN TAP 138KV CKT 1'	110	110	0.0394	115.7207	'GEN560232 1-G08-79 0.5750
13G	03ALL	'TO->FROM'	'CLEARWATER - MILAN TAP 138KV CKT 1'	110	110	0.0394	115.7207	'GEN560232 1-G08-79 0.5750
13G	03ALL	'TO->FROM'	'CLEARWATER - MILAN TAP 138KV CKT 1'	110	110	0.52726	115.7207	'GEN560232 1-G08-79 0.5750
13G	03ALL	'TO->FROM'	'CLEARWATER - MILAN TAP 138KV CKT 1'	110	110	0.03696	115.7207	'GEN560232 1-G08-79 0.5750
13G	03ALL	'TO->FROM'	'CLEARWATER - MILAN TAP 138KV CKT 1'	110	110	0.04265	115.7207	'GEN560232 1-G08-79 0.5750
13G	03ALL	'TO->FROM'	'CLEARWATER - MILAN TAP 138KV CKT 1'	110	110	0.03608	115.7207	'GEN560232 1-G08-79 0.5750
13G	03ALL	'FROM->TO'	'HARPER - MILAN TAP 138KV CKT 1'	95.6	95.6	0.03559	140.5703	'GEN560232 1-G08-79 0.5750
13G	03ALL	'FROM->TO'	'HARPER - MILAN TAP 138KV CKT 1'	95.6	95.6	0.06218	140.5703	'GEN560232 1-G08-79 0.5750
13G	03ALL	'FROM->TO'	'HARPER - MILAN TAP 138KV CKT 1'	95.6	95.6	0.10851	140.5703	'GEN560232 1-G08-79 0.5750
13G	03ALL	'FROM->TO'	'HARPER - MILAN TAP 138KV CKT 1'	95.6	95.6	0.04844	140.5703	'GEN560232 1-G08-79 0.5750
13G	03ALL	'FROM->TO'	'HARPER - MILAN TAP 138KV CKT 1'	95.6	95.6	0.04844	140.5703	'GEN560232 1-G08-79 0.5750
13G	03ALL	'FROM->TO'	'HARPER - MILAN TAP 138KV CKT 1'	95.6	95.6	0.2104	140.5703	'GEN560232 1-G08-79 0.5750
13G	03ALL	'FROM->TO'	'HARPER - MILAN TAP 138KV CKT 1'	95.6	95.6	0.03753	140.5703	'GEN560232 1-G08-79 0.5750
13G	03ALL	'FROM->TO'	'HARPER - MILAN TAP 138KV CKT 1'	95.6	95.6	0.0394	140.5703	'GEN560232 1-G08-79 0.5750
13G	03ALL	'FROM->TO'	'HARPER - MILAN TAP 138KV CKT 1'	95.6	95.6	0.0394	140.5703	'GEN560232 1-G08-79 0.5750
13G	03ALL	'FROM->TO'	'HARPER - MILAN TAP 138KV CKT 1'	95.6	95.6	0.52726	140.5703	'GEN560232 1-G08-79 0.5750
13G	03ALL	'FROM->TO'	'HARPER - MILAN TAP 138KV CKT 1'	95.6	95.6	0.03696	140.5703	'GEN560232 1-G08-79 0.5750
13G	03ALL	'FROM->TO'	'HARPER - MILAN TAP 138KV CKT 1'	95.6	95.6	0.04265	140.5703	'GEN560232 1-G08-79 0.5750
13G	03ALL	'FROM->TO'	'HARPER - MILAN TAP 138KV CKT 1'	95.6	95.6	0.03608	140.5703	'GEN560232 1-G08-79 0.5750
13G	03ALL	'TO->FROM'	'CLEARWATER - MILAN TAP 138KV CKT 1'	110	110	0.03559	117.4068	'GEN560238 1-G10-09 0.6900
13G	03ALL	'TO->FROM'	'CLEARWATER - MILAN TAP 138KV CKT 1'	110	110	0.06218	117.4068	'GEN560238 1-G10-09 0.6900
13G	03ALL	'TO->FROM'	'CLEARWATER - MILAN TAP 138KV CKT 1'	110	110	0.10851	117.4068	'GEN560238 1-G10-09 0.6900
13G	03ALL	'TO->FROM'	'CLEARWATER - MILAN TAP 138KV CKT 1'	110	110	0.04844	117.4068	'GEN560238 1-G10-09 0.6900
13G	03ALL	'TO->FROM'	'CLEARWATER - MILAN TAP 138KV CKT 1'	110	110	0.04844	117.4068	'GEN560238 1-G10-09 0.6900
13G	03ALL	'TO->FROM'	'CLEARWATER - MILAN TAP 138KV CKT 1'	110	110	0.2104	117.4068	'GEN560238 1-G10-09 0.6900
13G	03ALL	'TO->FROM'	'CLEARWATER - MILAN TAP 138KV CKT 1'	110	110	0.03753	117.4068	'GEN560238 1-G10-09 0.6900
13G	03ALL	'TO->FROM'	'CLEARWATER - MILAN TAP 138KV CKT 1'	110	110	0.0394	117.4068	'GEN560238 1-G10-09 0.6900
13G	03ALL	'TO->FROM'	'CLEARWATER - MILAN TAP 138KV CKT 1'	110	110	0.0394	117.4068	'GEN560238 1-G10-09 0.6900
13G	03ALL	'TO->FROM'	'CLEARWATER - MILAN TAP 138KV CKT 1'	110	110	0.52726	117.4068	'GEN560238 1-G10-09 0.6900
13G	03ALL	'TO->FROM'	'CLEARWATER - MILAN TAP 138KV CKT 1'	110	110	0.03696	117.4068	'GEN560238 1-G10-09 0.6900
13G	03ALL	'TO->FROM'	'CLEARWATER - MILAN TAP 138KV CKT 1'	110	110	0.04265	117.4068	'GEN560238 1-G10-09 0.6900
13G	03ALL	'TO->FROM'	'CLEARWATER - MILAN TAP 138KV CKT 1'	110	110	0.03608	117.4068	'GEN560238 1-G10-09 0.6900
13G	03ALL	'TO->FROM'	'GREENSBURG - SSTARTP3 115.00 115KV CKT 1	120.7	129.5	0.17753	102.3916	'GEN560238 1-G10-09 0.6900
13G	03ALL	'TO->FROM'	'GREENSBURG - SSTARTP3 115.00 115KV CKT 1	120.7	129.5	0.04472	102.3916	'GEN560238 1-G10-09 0.6900
13G	03ALL	'TO->FROM'	'GREENSBURG - SSTARTP3 115.00 115KV CKT 1	120.7	129.5	0.04472	102.3916	'GEN560238 1-G10-09 0.6900
13G	03ALL	'TO->FROM'	'GREENSBURG - SSTARTP3 115.00 115KV CKT 1	120.7	129.5	0.39904	102.3916	'GEN560238 1-G10-09 0.6900
13G	03ALL	'TO->FROM'	'GREENSBURG - SSTARTP3 115.00 115KV CKT 1	120.7	129.5	0.0299	102.3916	'GEN560238 1-G10-09 0.6900
13G	03ALL	'TO->FROM'	'GREENSBURG - SSTARTP3 115.00 115KV CKT 1	120.7	129.5	0.03411	102.3916	'GEN560238 1-G10-09 0.6900
13G	03ALL	'TO->FROM'	'GREENSBURG - SSTARTP3 115.00 115KV CKT 1	120.7	129.5	0.03411	102.3916	'GEN560238 1-G10-09 0.6900
13G	03ALL	'TO->FROM'	'GREENSBURG - SSTARTP3 115.00 115KV CKT 1	120.7	129.5	0.02996	102.3916	'GEN560238 1-G10-09 0.6900
13G	03ALL	'TO->FROM'	'GREENSBURG - SSTARTP3 115.00 115KV CKT 1	120.7	129.5	0.03691	102.3916	'GEN560238 1-G10-09 0.6900
13G	03ALL	'TO->FROM'	'GREENSBURG - SSTARTP3 115.00 115KV CKT 1	120.7	129.5	0.03126	102.3916	'GEN560238 1-G10-09 0.6900
13G	03ALL	'FROM->TO'	'HARPER - MILAN TAP 138KV CKT 1'	95.6	95.6	0.03559	142.4817	'GEN560238 1-G10-09 0.6900
13G	03ALL	'FROM->TO'	'HARPER - MILAN TAP 138KV CKT 1'	95.6	95.6	0.06218	142.4817	'GEN560238 1-G10-09 0.6900
13G	03ALL	'FROM->TO'	'HARPER - MILAN TAP 138KV CKT 1'	95.6	95.6	0.10851	142.4817	'GEN560238 1-G10-09 0.6900
13G	03ALL	'FROM->TO'	'HARPER - MILAN TAP 138KV CKT 1'	95.6	95.6	0.04844	142.4817	'GEN560238 1-G10-09 0.6900
13G	03ALL	'FROM->TO'	'HARPER - MILAN TAP 138KV CKT 1'	95.6	95.6	0.04844	142.4817	'GEN560238 1-G10-09 0.6900
13G	03ALL	'FROM->TO'	'HARPER - MILAN TAP 138KV CKT 1'	95.6	95.6	0.2104	142.4817	'GEN560238 1-G10-09 0.6900
13G	03ALL	'FROM->TO'	'HARPER - MILAN TAP 138KV CKT 1'	95.6	95.6	0.03753	142.4817	'GEN560238 1-G10-09 0.6900

SEASON	GROUP	DIRECTION	MONITORED ELEMENT	RATE A (MVA)	RATE B (MVA)	TDF	TC%LOADING (%MVA)	CONTINGENCY NAME
13G	03ALL	'FROM->TO'	'HARPER - MILAN TAP 138KV CKT 1'	95.6	95.6	0.0394	142.4817	'GEN560238 1-G10-09 0.6900
13G	03ALL	'FROM->TO'	'HARPER - MILAN TAP 138KV CKT 1'	95.6	95.6	0.0394	142.4817	'GEN560238 1-G10-09 0.6900
13G	03ALL	'FROM->TO'	'HARPER - MILAN TAP 138KV CKT 1'	95.6	95.6	0.52726	142.4817	'GEN560238 1-G10-09 0.6900
13G	03ALL	'FROM->TO'	'HARPER - MILAN TAP 138KV CKT 1'	95.6	95.6	0.03696	142.4817	'GEN560238 1-G10-09 0.6900
13G	03ALL	'FROM->TO'	'HARPER - MILAN TAP 138KV CKT 1'	95.6	95.6	0.04265	142.4817	'GEN560238 1-G10-09 0.6900
13G	03ALL	'FROM->TO'	'HARPER - MILAN TAP 138KV CKT 1'	95.6	95.6	0.03608	142.4817	'GEN560238 1-G10-09 0.6900
13G	03ALL	'TO->FROM'	'CLEARWATER - MILAN TAP 138KV CKT 1'	110	110	0.03559	115.2689	'GEN560279 1-G08-18 0.6900
13G	03ALL	'TO->FROM'	'CLEARWATER - MILAN TAP 138KV CKT 1'	110	110	0.06218	115.2689	'GEN560279 1-G08-18 0.6900
13G	03ALL	'TO->FROM'	'CLEARWATER - MILAN TAP 138KV CKT 1'	110	110	0.10851	115.2689	'GEN560279 1-G08-18 0.6900
13G	03ALL	'TO->FROM'	'CLEARWATER - MILAN TAP 138KV CKT 1'	110	110	0.04844	115.2689	'GEN560279 1-G08-18 0.6900
13G	03ALL	'TO->FROM'	'CLEARWATER - MILAN TAP 138KV CKT 1'	110	110	0.04844	115.2689	'GEN560279 1-G08-18 0.6900
13G	03ALL	'TO->FROM'	'CLEARWATER - MILAN TAP 138KV CKT 1'	110	110	0.2104	115.2689	'GEN560279 1-G08-18 0.6900
13G	03ALL	'TO->FROM'	'CLEARWATER - MILAN TAP 138KV CKT 1'	110	110	0.03753	115.2689	'GEN560279 1-G08-18 0.6900
13G	03ALL	'TO->FROM'	'CLEARWATER - MILAN TAP 138KV CKT 1'	110	110	0.0394	115.2689	'GEN560279 1-G08-18 0.6900
13G	03ALL	'TO->FROM'	'CLEARWATER - MILAN TAP 138KV CKT 1'	110	110	0.0394	115.2689	'GEN560279 1-G08-18 0.6900
13G	03ALL	'TO->FROM'	'CLEARWATER - MILAN TAP 138KV CKT 1'	110	110	0.52726	115.2689	'GEN560279 1-G08-18 0.6900
13G	03ALL	'TO->FROM'	'CLEARWATER - MILAN TAP 138KV CKT 1'	110	110	0.03696	115.2689	'GEN560279 1-G08-18 0.6900
13G	03ALL	'TO->FROM'	'CLEARWATER - MILAN TAP 138KV CKT 1'	110	110	0.04265	115.2689	'GEN560279 1-G08-18 0.6900
13G	03ALL	'TO->FROM'	'CLEARWATER - MILAN TAP 138KV CKT 1'	110	110	0.03608	115.2689	'GEN560279 1-G08-18 0.6900
13G	03ALL	'TO->FROM'	'GREENSBURG - SSTARTP3 115.00 115KV CKT 1	120.7	129.5	0.17753	100.5922	'GEN560279 1-G08-18 0.6900
13G	03ALL	'TO->FROM'	'GREENSBURG - SSTARTP3 115.00 115KV CKT 1	120.7	129.5	0.04472	100.5922	'GEN560279 1-G08-18 0.6900
13G	03ALL	'TO->FROM'	'GREENSBURG - SSTARTP3 115.00 115KV CKT 1	120.7	129.5	0.04472	100.5922	'GEN560279 1-G08-18 0.6900
13G	03ALL	'TO->FROM'	'GREENSBURG - SSTARTP3 115.00 115KV CKT 1	120.7	129.5	0.39904	100.5922	'GEN560279 1-G08-18 0.6900
13G	03ALL	'TO->FROM'	'GREENSBURG - SSTARTP3 115.00 115KV CKT 1	120.7	129.5	0.0299	100.5922	'GEN560279 1-G08-18 0.6900
13G	03ALL	'TO->FROM'	'GREENSBURG - SSTARTP3 115.00 115KV CKT 1	120.7	129.5	0.03411	100.5922	'GEN560279 1-G08-18 0.6900
13G	03ALL	'TO->FROM'	'GREENSBURG - SSTARTP3 115.00 115KV CKT 1	120.7	129.5	0.03411	100.5922	'GEN560279 1-G08-18 0.6900
13G	03ALL	'TO->FROM'	'GREENSBURG - SSTARTP3 115.00 115KV CKT 1	120.7	129.5	0.02996	100.5922	'GEN560279 1-G08-18 0.6900
13G	03ALL	'TO->FROM'	'GREENSBURG - SSTARTP3 115.00 115KV CKT 1	120.7	129.5	0.03691	100.5922	'GEN560279 1-G08-18 0.6900
13G	03ALL	'TO->FROM'	'GREENSBURG - SSTARTP3 115.00 115KV CKT 1	120.7	129.5	0.03126	100.5922	'GEN560279 1-G08-18 0.6900
13G	03ALL	'FROM->TO'	'HARPER - MILAN TAP 138KV CKT 1'	95.6	95.6	0.03559	140.0392	'GEN560279 1-G08-18 0.6900
13G	03ALL	'FROM->TO'	'HARPER - MILAN TAP 138KV CKT 1'	95.6	95.6	0.06218	140.0392	'GEN560279 1-G08-18 0.6900
13G	03ALL	'FROM->TO'	'HARPER - MILAN TAP 138KV CKT 1'	95.6	95.6	0.10851	140.0392	'GEN560279 1-G08-18 0.6900
13G	03ALL	'FROM->TO'	'HARPER - MILAN TAP 138KV CKT 1'	95.6	95.6	0.04844	140.0392	'GEN560279 1-G08-18 0.6900
13G	03ALL	'FROM->TO'	'HARPER - MILAN TAP 138KV CKT 1'	95.6	95.6	0.04844	140.0392	'GEN560279 1-G08-18 0.6900
13G	03ALL	'FROM->TO'	'HARPER - MILAN TAP 138KV CKT 1'	95.6	95.6	0.2104	140.0392	'GEN560279 1-G08-18 0.6900
13G	03ALL	'FROM->TO'	'HARPER - MILAN TAP 138KV CKT 1'	95.6	95.6	0.03753	140.0392	'GEN560279 1-G08-18 0.6900
13G	03ALL	'FROM->TO'	'HARPER - MILAN TAP 138KV CKT 1'	95.6	95.6	0.0394	140.0392	'GEN560279 1-G08-18 0.6900
13G	03ALL	'FROM->TO'	'HARPER - MILAN TAP 138KV CKT 1'	95.6	95.6	0.0394	140.0392	'GEN560279 1-G08-18 0.6900
13G	03ALL	'FROM->TO'	'HARPER - MILAN TAP 138KV CKT 1'	95.6	95.6	0.52726	140.0392	'GEN560279 1-G08-18 0.6900
13G	03ALL	'FROM->TO'	'HARPER - MILAN TAP 138KV CKT 1'	95.6	95.6	0.03696	140.0392	'GEN560279 1-G08-18 0.6900
13G	03ALL	'FROM->TO'	'HARPER - MILAN TAP 138KV CKT 1'	95.6	95.6	0.04265	140.0392	'GEN560279 1-G08-18 0.6900
13G	03ALL	'FROM->TO'	'HARPER - MILAN TAP 138KV CKT 1'	95.6	95.6	0.03608	140.0392	'GEN560279 1-G08-18 0.6900
13G	03ALL	'FROM->TO'	'SMOKYHL6 230.00 - SUMMIT 230KV CKT 1'	319	319	0.18549	103.6731	'GEN560309 1-G09-20 0.6900
13G	03ALL	'FROM->TO'	'SMOKYHL6 230.00 - SUMMIT 230KV CKT 1'	319	319	0.08979	103.6731	'GEN560309 1-G09-20 0.6900
13G	03ALL	'FROM->TO'	'SMOKYHL6 230.00 - SUMMIT 230KV CKT 1'	319	319	0.10326	103.6731	'GEN560309 1-G09-20 0.6900
13G	03ALL	'FROM->TO'	'SMOKYHL6 230.00 - SUMMIT 230KV CKT 1'	319	319	0.12225	103.6731	'GEN560309 1-G09-20 0.6900
13G	03ALL	'FROM->TO'	'SMOKYHL6 230.00 - SUMMIT 230KV CKT 1'	319	319	0.12225	103.6731	'GEN560309 1-G09-20 0.6900
13G	03ALL	'FROM->TO'	'SMOKYHL6 230.00 - SUMMIT 230KV CKT 1'	319	319	0.07803	103.6731	'GEN560309 1-G09-20 0.6900
13G	03ALL	'FROM->TO'	'SMOKYHL6 230.00 - SUMMIT 230KV CKT 1'	319	319	0.09991	103.6731	'GEN560309 1-G09-20 0.6900
13G	03ALL	'FROM->TO'	'SMOKYHL6 230.00 - SUMMIT 230KV CKT 1'	319	319	0.11509	103.6731	'GEN560309 1-G09-20 0.6900
13G	03ALL	'FROM->TO'	'SMOKYHL6 230.00 - SUMMIT 230KV CKT 1'	319	319	0.11509	103.6731	'GEN560309 1-G09-20 0.6900
13G	03ALL	'FROM->TO'	'SMOKYHL6 230.00 - SUMMIT 230KV CKT 1'	319	319	0.62637	103.6731	'GEN560309 1-G09-20 0.6900
13G	03ALL	'FROM->TO'	'SMOKYHL6 230.00 - SUMMIT 230KV CKT 1'	319	319	0.09991	103.6731	'GEN560309 1-G09-20 0.6900
13G	03ALL	'FROM->TO'	'SMOKYHL6 230.00 - SUMMIT 230KV CKT 1'	319	319	0.1274	103.6731	'GEN560309 1-G09-20 0.6900
13G	03ALL	'FROM->TO'	'SMOKYHL6 230.00 - SUMMIT 230KV CKT 1'	319	319	0.10261	103.6731	'GEN560309 1-G09-20 0.6900
13G	03ALL	'FROM->TO'	'SMOKYHL6 230.00 - SUMMIT 230KV CKT 1'	319	319	0.18549	101.1254	'GEN560514 1-G04_014 0.6900'
13G	03ALL	'FROM->TO'	'SMOKYHL6 230.00 - SUMMIT 230KV CKT 1'	319	319	0.08979	101.1254	'GEN560514 1-G04_014 0.6900'
13G	03ALL	'FROM->TO'	'SMOKYHL6 230.00 - SUMMIT 230KV CKT 1'	319	319	0.10326	101.1254	'GEN560514 1-G04_014 0.6900'
13G	03ALL	'FROM->TO'	'SMOKYHL6 230.00 - SUMMIT 230KV CKT 1'	319	319	0.12225	101.1254	'GEN560514 1-G04_014 0.6900'
13G	03ALL	'FROM->TO'	'SMOKYHL6 230.00 - SUMMIT 230KV CKT 1'	319	319	0.12225	101.1254	'GEN560514 1-G04_014 0.6900'
13G	03ALL	'FROM->TO'	'SMOKYHL6 230.00 - SUMMIT 230KV CKT 1'	319	319	0.07803	101.1254	'GEN560514 1-G04_014 0.6900'
13G	03ALL	'FROM->TO'	'SMOKYHL6 230.00 - SUMMIT 230KV CKT 1'	319	319	0.09991	101.1254	'GEN560514 1-G04_014 0.6900'
13G	03ALL	'FROM->TO'	'SMOKYHL6 230.00 - SUMMIT 230KV CKT 1'	319	319	0.11509	101.1254	'GEN560514 1-G04_014 0.6900'
13G	03ALL	'FROM->TO'	'SMOKYHL6 230.00 - SUMMIT 230KV CKT 1'	319	319	0.11509	101.1254	'GEN560514 1-G04_014 0.6900'

SEASON	GROUP	DIRECTION	MONITORED ELEMENT	RATE A (MVA)	RATE B (MVA)	TDF	TC%LOADING (%MVA)	CONTINGENCY NAME
13G	03ALL	'FROM->TO'	'SMOKYHL6 230.00 - SUMMIT 230KV CKT 1'	319	319	0.62637	101.1254	'GEN560514 1-G04_014 0.6900'
13G	03ALL	'FROM->TO'	'SMOKYHL6 230.00 - SUMMIT 230KV CKT 1'	319	319	0.09991	101.1254	'GEN560514 1-G04_014 0.6900'
13G	03ALL	'FROM->TO'	'SMOKYHL6 230.00 - SUMMIT 230KV CKT 1'	319	319	0.1274	101.1254	'GEN560514 1-G04_014 0.6900'
13G	03ALL	'FROM->TO'	'SMOKYHL6 230.00 - SUMMIT 230KV CKT 1'	319	319	0.10261	101.1254	'GEN560514 1-G04_014 0.6900'
13G	03ALL	'TO->FROM'	'CLEARWATER - MILAN TAP 138KV CKT 1'	110	110	0.03559	118.8659	'GEN560514 1-G04_014 0.6900'
13G	03ALL	'TO->FROM'	'CLEARWATER - MILAN TAP 138KV CKT 1'	110	110	0.06218	118.8659	'GEN560514 1-G04_014 0.6900'
13G	03ALL	'TO->FROM'	'CLEARWATER - MILAN TAP 138KV CKT 1'	110	110	0.10851	118.8659	'GEN560514 1-G04_014 0.6900'
13G	03ALL	'TO->FROM'	'CLEARWATER - MILAN TAP 138KV CKT 1'	110	110	0.04844	118.8659	'GEN560514 1-G04_014 0.6900'
13G	03ALL	'TO->FROM'	'CLEARWATER - MILAN TAP 138KV CKT 1'	110	110	0.04844	118.8659	'GEN560514 1-G04_014 0.6900'
13G	03ALL	'TO->FROM'	'CLEARWATER - MILAN TAP 138KV CKT 1'	110	110	0.2104	118.8659	'GEN560514 1-G04_014 0.6900'
13G	03ALL	'TO->FROM'	'CLEARWATER - MILAN TAP 138KV CKT 1'	110	110	0.03753	118.8659	'GEN560514 1-G04_014 0.6900'
13G	03ALL	'TO->FROM'	'CLEARWATER - MILAN TAP 138KV CKT 1'	110	110	0.0394	118.8659	'GEN560514 1-G04_014 0.6900'
13G	03ALL	'TO->FROM'	'CLEARWATER - MILAN TAP 138KV CKT 1'	110	110	0.0394	118.8659	'GEN560514 1-G04_014 0.6900'
13G	03ALL	'TO->FROM'	'CLEARWATER - MILAN TAP 138KV CKT 1'	110	110	0.52726	118.8659	'GEN560514 1-G04_014 0.6900'
13G	03ALL	'TO->FROM'	'CLEARWATER - MILAN TAP 138KV CKT 1'	110	110	0.03696	118.8659	'GEN560514 1-G04_014 0.6900'
13G	03ALL	'TO->FROM'	'CLEARWATER - MILAN TAP 138KV CKT 1'	110	110	0.04265	118.8659	'GEN560514 1-G04_014 0.6900'
13G	03ALL	'TO->FROM'	'CLEARWATER - MILAN TAP 138KV CKT 1'	110	110	0.03608	118.8659	'GEN560514 1-G04_014 0.6900'
13G	03ALL	'TO->FROM'	'GREENSBURG - SSTARTP3 115.00 115KV CKT 1	120.7	129.5	0.17753	103.4452	'GEN560514 1-G04_014 0.6900'
13G	03ALL	'TO->FROM'	'GREENSBURG - SSTARTP3 115.00 115KV CKT 1	120.7	129.5	0.04472	103.4452	'GEN560514 1-G04_014 0.6900'
13G	03ALL	'TO->FROM'	'GREENSBURG - SSTARTP3 115.00 115KV CKT 1	120.7	129.5	0.04472	103.4452	'GEN560514 1-G04_014 0.6900'
13G	03ALL	'TO->FROM'	'GREENSBURG - SSTARTP3 115.00 115KV CKT 1	120.7	129.5	0.39904	103.4452	'GEN560514 1-G04_014 0.6900'
13G	03ALL	'TO->FROM'	'GREENSBURG - SSTARTP3 115.00 115KV CKT 1	120.7	129.5	0.0299	103.4452	'GEN560514 1-G04_014 0.6900'
13G	03ALL	'TO->FROM'	'GREENSBURG - SSTARTP3 115.00 115KV CKT 1	120.7	129.5	0.03411	103.4452	'GEN560514 1-G04_014 0.6900'
13G	03ALL	'TO->FROM'	'GREENSBURG - SSTARTP3 115.00 115KV CKT 1	120.7	129.5	0.03411	103.4452	'GEN560514 1-G04_014 0.6900'
13G	03ALL	'TO->FROM'	'GREENSBURG - SSTARTP3 115.00 115KV CKT 1	120.7	129.5	0.02996	103.4452	'GEN560514 1-G04_014 0.6900'
13G	03ALL	'TO->FROM'	'GREENSBURG - SSTARTP3 115.00 115KV CKT 1	120.7	129.5	0.03691	103.4452	'GEN560514 1-G04_014 0.6900'
13G	03ALL	'TO->FROM'	'GREENSBURG - SSTARTP3 115.00 115KV CKT 1	120.7	129.5	0.03126	103.4452	'GEN560514 1-G04_014 0.6900'
13G	03ALL	'FROM->TO'	'HARPER - MILAN TAP 138KV CKT 1'	95.6	95.6	0.03559	144.1476	'GEN560514 1-G04_014 0.6900'
13G	03ALL	'FROM->TO'	'HARPER - MILAN TAP 138KV CKT 1'	95.6	95.6	0.06218	144.1476	'GEN560514 1-G04_014 0.6900'
13G	03ALL	'FROM->TO'	'HARPER - MILAN TAP 138KV CKT 1'	95.6	95.6	0.10851	144.1476	'GEN560514 1-G04_014 0.6900'
13G	03ALL	'FROM->TO'	'HARPER - MILAN TAP 138KV CKT 1'	95.6	95.6	0.04844	144.1476	'GEN560514 1-G04_014 0.6900'
13G	03ALL	'FROM->TO'	'HARPER - MILAN TAP 138KV CKT 1'	95.6	95.6	0.04844	144.1476	'GEN560514 1-G04_014 0.6900'
13G	03ALL	'FROM->TO'	'HARPER - MILAN TAP 138KV CKT 1'	95.6	95.6	0.2104	144.1476	'GEN560514 1-G04_014 0.6900'
13G	03ALL	'FROM->TO'	'HARPER - MILAN TAP 138KV CKT 1'	95.6	95.6	0.03753	144.1476	'GEN560514 1-G04_014 0.6900'
13G	03ALL	'FROM->TO'	'HARPER - MILAN TAP 138KV CKT 1'	95.6	95.6	0.0394	144.1476	'GEN560514 1-G04_014 0.6900'
13G	03ALL	'FROM->TO'	'HARPER - MILAN TAP 138KV CKT 1'	95.6	95.6	0.0394	144.1476	'GEN560514 1-G04_014 0.6900'
13G	03ALL	'FROM->TO'	'HARPER - MILAN TAP 138KV CKT 1'	95.6	95.6	0.52726	144.1476	'GEN560514 1-G04_014 0.6900'
13G	03ALL	'FROM->TO'	'HARPER - MILAN TAP 138KV CKT 1'	95.6	95.6	0.03696	144.1476	'GEN560514 1-G04_014 0.6900'
13G	03ALL	'FROM->TO'	'HARPER - MILAN TAP 138KV CKT 1'	95.6	95.6	0.04265	144.1476	'GEN560514 1-G04_014 0.6900'
13G	03ALL	'FROM->TO'	'HARPER - MILAN TAP 138KV CKT 1'	95.6	95.6	0.03608	144.1476	'GEN560514 1-G04_014 0.6900'
13G	03ALL	'TO->FROM'	'CLEARWATER - MILAN TAP 138KV CKT 1'	110	110	0.03559	117.1687	'GEN560522 1-G05-12 0.6900
13G	03ALL	'TO->FROM'	'CLEARWATER - MILAN TAP 138KV CKT 1'	110	110	0.06218	117.1687	'GEN560522 1-G05-12 0.6900
13G	03ALL	'TO->FROM'	'CLEARWATER - MILAN TAP 138KV CKT 1'	110	110	0.10851	117.1687	'GEN560522 1-G05-12 0.6900
13G	03ALL	'TO->FROM'	'CLEARWATER - MILAN TAP 138KV CKT 1'	110	110	0.04844	117.1687	'GEN560522 1-G05-12 0.6900
13G	03ALL	'TO->FROM'	'CLEARWATER - MILAN TAP 138KV CKT 1'	110	110	0.04844	117.1687	'GEN560522 1-G05-12 0.6900
13G	03ALL	'TO->FROM'	'CLEARWATER - MILAN TAP 138KV CKT 1'	110	110	0.2104	117.1687	'GEN560522 1-G05-12 0.6900
13G	03ALL	'TO->FROM'	'CLEARWATER - MILAN TAP 138KV CKT 1'	110	110	0.03753	117.1687	'GEN560522 1-G05-12 0.6900
13G	03ALL	'TO->FROM'	'CLEARWATER - MILAN TAP 138KV CKT 1'	110	110	0.0394	117.1687	'GEN560522 1-G05-12 0.6900
13G	03ALL	'TO->FROM'	'CLEARWATER - MILAN TAP 138KV CKT 1'	110	110	0.0394	117.1687	'GEN560522 1-G05-12 0.6900
13G	03ALL	'TO->FROM'	'CLEARWATER - MILAN TAP 138KV CKT 1'	110	110	0.52726	117.1687	'GEN560522 1-G05-12 0.6900
13G	03ALL	'TO->FROM'	'CLEARWATER - MILAN TAP 138KV CKT 1'	110	110	0.03696	117.1687	'GEN560522 1-G05-12 0.6900
13G	03ALL	'TO->FROM'	'CLEARWATER - MILAN TAP 138KV CKT 1'	110	110	0.04265	117.1687	'GEN560522 1-G05-12 0.6900
13G	03ALL	'TO->FROM'	'CLEARWATER - MILAN TAP 138KV CKT 1'	110	110	0.03608	117.1687	'GEN560522 1-G05-12 0.6900
13G	03ALL	'TO->FROM'	'GREENSBURG - SSTARTP3 115.00 115KV CKT 1	120.7	129.5	0.17753	102.2754	'GEN560522 1-G05-12 0.6900
13G	03ALL	'TO->FROM'	'GREENSBURG - SSTARTP3 115.00 115KV CKT 1	120.7	129.5	0.04472	102.2754	'GEN560522 1-G05-12 0.6900
13G	03ALL	'TO->FROM'	'GREENSBURG - SSTARTP3 115.00 115KV CKT 1	120.7	129.5	0.04472	102.2754	'GEN560522 1-G05-12 0.6900
13G	03ALL	'TO->FROM'	'GREENSBURG - SSTARTP3 115.00 115KV CKT 1	120.7	129.5	0.39904	102.2754	'GEN560522 1-G05-12 0.6900
13G	03ALL	'TO->FROM'	'GREENSBURG - SSTARTP3 115.00 115KV CKT 1	120.7	129.5	0.0299	102.2754	'GEN560522 1-G05-12 0.6900
13G	03ALL	'TO->FROM'	'GREENSBURG - SSTARTP3 115.00 115KV CKT 1	120.7	129.5	0.03411	102.2754	'GEN560522 1-G05-12 0.6900
13G	03ALL	'TO->FROM'	'GREENSBURG - SSTARTP3 115.00 115KV CKT 1	120.7	129.5	0.03411	102.2754	'GEN560522 1-G05-12 0.6900
13G	03ALL	'TO->FROM'	'GREENSBURG - SSTARTP3 115.00 115KV CKT 1	120.7	129.5	0.02996	102.2754	'GEN560522 1-G05-12 0.6900
13G	03ALL	'TO->FROM'	'GREENSBURG - SSTARTP3 115.00 115KV CKT 1	120.7	129.5	0.03691	102.2754	'GEN560522 1-G05-12 0.6900
13G	03ALL	'TO->FROM'	'GREENSBURG - SSTARTP3 115.00 115KV CKT 1	120.7	129.5	0.03126	102.2754	'GEN560522 1-G05-12 0.6900
13G	03ALL	'FROM->TO'	'HARPER - MILAN TAP 138KV CKT 1'	95.6	95.6	0.03559	142.2069	'GEN560522 1-G05-12 0.6900

SEASON	GROUP	DIRECTION	MONITORED ELEMENT	RATE A (MVA)	RATE B (MVA)	TDF	TC%LOADING (%MVA)	CONTINGENCY NAME
13G	03ALL	'FROM->TO'	'HARPER - MILAN TAP 138KV CKT 1'	95.6	95.6	0.06218	142.2069	'GEN560522 1-G05-12 0.6900
13G	03ALL	'FROM->TO'	'HARPER - MILAN TAP 138KV CKT 1'	95.6	95.6	0.10851	142.2069	'GEN560522 1-G05-12 0.6900
13G	03ALL	'FROM->TO'	'HARPER - MILAN TAP 138KV CKT 1'	95.6	95.6	0.04844	142.2069	'GEN560522 1-G05-12 0.6900
13G	03ALL	'FROM->TO'	'HARPER - MILAN TAP 138KV CKT 1'	95.6	95.6	0.04844	142.2069	'GEN560522 1-G05-12 0.6900
13G	03ALL	'FROM->TO'	'HARPER - MILAN TAP 138KV CKT 1'	95.6	95.6	0.2104	142.2069	'GEN560522 1-G05-12 0.6900
13G	03ALL	'FROM->TO'	'HARPER - MILAN TAP 138KV CKT 1'	95.6	95.6	0.03753	142.2069	'GEN560522 1-G05-12 0.6900
13G	03ALL	'FROM->TO'	'HARPER - MILAN TAP 138KV CKT 1'	95.6	95.6	0.0394	142.2069	'GEN560522 1-G05-12 0.6900
13G	03ALL	'FROM->TO'	'HARPER - MILAN TAP 138KV CKT 1'	95.6	95.6	0.0394	142.2069	'GEN560522 1-G05-12 0.6900
13G	03ALL	'FROM->TO'	'HARPER - MILAN TAP 138KV CKT 1'	95.6	95.6	0.52726	142.2069	'GEN560522 1-G05-12 0.6900
13G	03ALL	'FROM->TO'	'HARPER - MILAN TAP 138KV CKT 1'	95.6	95.6	0.03696	142.2069	'GEN560522 1-G05-12 0.6900
13G	03ALL	'FROM->TO'	'HARPER - MILAN TAP 138KV CKT 1'	95.6	95.6	0.04265	142.2069	'GEN560522 1-G05-12 0.6900
13G	03ALL	'FROM->TO'	'HARPER - MILAN TAP 138KV CKT 1'	95.6	95.6	0.03608	142.2069	'GEN560522 1-G05-12 0.6900
13G	03ALL	'FROM->TO'	'SMOKYHL6 230.00 - SUMMIT 230KV CKT 1'	319	319	0.18549	107.8533	'GEN560651 1-G07-25 0.6900
13G	03ALL	'FROM->TO'	'SMOKYHL6 230.00 - SUMMIT 230KV CKT 1'	319	319	0.08979	107.8533	'GEN560651 1-G07-25 0.6900
13G	03ALL	'FROM->TO'	'SMOKYHL6 230.00 - SUMMIT 230KV CKT 1'	319	319	0.10326	107.8533	'GEN560651 1-G07-25 0.6900
13G	03ALL	'FROM->TO'	'SMOKYHL6 230.00 - SUMMIT 230KV CKT 1'	319	319	0.12225	107.8533	'GEN560651 1-G07-25 0.6900
13G	03ALL	'FROM->TO'	'SMOKYHL6 230.00 - SUMMIT 230KV CKT 1'	319	319	0.12225	107.8533	'GEN560651 1-G07-25 0.6900
13G	03ALL	'FROM->TO'	'SMOKYHL6 230.00 - SUMMIT 230KV CKT 1'	319	319	0.07803	107.8533	'GEN560651 1-G07-25 0.6900
13G	03ALL	'FROM->TO'	'SMOKYHL6 230.00 - SUMMIT 230KV CKT 1'	319	319	0.09991	107.8533	'GEN560651 1-G07-25 0.6900
13G	03ALL	'FROM->TO'	'SMOKYHL6 230.00 - SUMMIT 230KV CKT 1'	319	319	0.11509	107.8533	'GEN560651 1-G07-25 0.6900
13G	03ALL	'FROM->TO'	'SMOKYHL6 230.00 - SUMMIT 230KV CKT 1'	319	319	0.11509	107.8533	'GEN560651 1-G07-25 0.6900
13G	03ALL	'FROM->TO'	'SMOKYHL6 230.00 - SUMMIT 230KV CKT 1'	319	319	0.62637	107.8533	'GEN560651 1-G07-25 0.6900
13G	03ALL	'FROM->TO'	'SMOKYHL6 230.00 - SUMMIT 230KV CKT 1'	319	319	0.09991	107.8533	'GEN560651 1-G07-25 0.6900
13G	03ALL	'FROM->TO'	'SMOKYHL6 230.00 - SUMMIT 230KV CKT 1'	319	319	0.1274	107.8533	'GEN560651 1-G07-25 0.6900
13G	03ALL	'FROM->TO'	'SMOKYHL6 230.00 - SUMMIT 230KV CKT 1'	319	319	0.10261	107.8533	'GEN560651 1-G07-25 0.6900
13G	03ALL	'FROM->TO'	'SMOKYHL6 230.00 - SUMMIT 230KV CKT 1'	319	319	0.18549	107.822	'GEN560669 1-G10_057 0.6900'
13G	03ALL	'FROM->TO'	'SMOKYHL6 230.00 - SUMMIT 230KV CKT 1'	319	319	0.08979	107.822	'GEN560669 1-G10_057 0.6900'
13G	03ALL	'FROM->TO'	'SMOKYHL6 230.00 - SUMMIT 230KV CKT 1'	319	319	0.10326	107.822	'GEN560669 1-G10_057 0.6900'
13G	03ALL	'FROM->TO'	'SMOKYHL6 230.00 - SUMMIT 230KV CKT 1'	319	319	0.12225	107.822	'GEN560669 1-G10_057 0.6900'
13G	03ALL	'FROM->TO'	'SMOKYHL6 230.00 - SUMMIT 230KV CKT 1'	319	319	0.12225	107.822	'GEN560669 1-G10_057 0.6900'
13G	03ALL	'FROM->TO'	'SMOKYHL6 230.00 - SUMMIT 230KV CKT 1'	319	319	0.07803	107.822	'GEN560669 1-G10_057 0.6900'
13G	03ALL	'FROM->TO'	'SMOKYHL6 230.00 - SUMMIT 230KV CKT 1'	319	319	0.09991	107.822	'GEN560669 1-G10_057 0.6900'
13G	03ALL	'FROM->TO'	'SMOKYHL6 230.00 - SUMMIT 230KV CKT 1'	319	319	0.11509	107.822	'GEN560669 1-G10_057 0.6900'
13G	03ALL	'FROM->TO'	'SMOKYHL6 230.00 - SUMMIT 230KV CKT 1'	319	319	0.11509	107.822	'GEN560669 1-G10_057 0.6900'
13G	03ALL	'FROM->TO'	'SMOKYHL6 230.00 - SUMMIT 230KV CKT 1'	319	319	0.62637	107.822	'GEN560669 1-G10_057 0.6900'
13G	03ALL	'FROM->TO'	'SMOKYHL6 230.00 - SUMMIT 230KV CKT 1'	319	319	0.09991	107.822	'GEN560669 1-G10_057 0.6900'
13G	03ALL	'FROM->TO'	'SMOKYHL6 230.00 - SUMMIT 230KV CKT 1'	319	319	0.1274	107.822	'GEN560669 1-G10_057 0.6900'
13G	03ALL	'FROM->TO'	'SMOKYHL6 230.00 - SUMMIT 230KV CKT 1'	319	319	0.10261	107.822	'GEN560669 1-G10_057 0.6900'
13G	03ALL	'TO->FROM'	'CLEARWATER - MILAN TAP 138KV CKT 1'	110	110	0.03559	119.726	'GEN560669 1-G10_057 0.6900'
13G	03ALL	'TO->FROM'	'CLEARWATER - MILAN TAP 138KV CKT 1'	110	110	0.06218	119.726	'GEN560669 1-G10_057 0.6900'
13G	03ALL	'TO->FROM'	'CLEARWATER - MILAN TAP 138KV CKT 1'	110	110	0.10851	119.726	'GEN560669 1-G10_057 0.6900'
13G	03ALL	'TO->FROM'	'CLEARWATER - MILAN TAP 138KV CKT 1'	110	110	0.04844	119.726	'GEN560669 1-G10_057 0.6900'
13G	03ALL	'TO->FROM'	'CLEARWATER - MILAN TAP 138KV CKT 1'	110	110	0.04844	119.726	'GEN560669 1-G10_057 0.6900'
13G	03ALL	'TO->FROM'	'CLEARWATER - MILAN TAP 138KV CKT 1'	110	110	0.2104	119.726	'GEN560669 1-G10_057 0.6900'
13G	03ALL	'TO->FROM'	'CLEARWATER - MILAN TAP 138KV CKT 1'	110	110	0.03753	119.726	'GEN560669 1-G10_057 0.6900'
13G	03ALL	'TO->FROM'	'CLEARWATER - MILAN TAP 138KV CKT 1'	110	110	0.0394	119.726	'GEN560669 1-G10_057 0.6900'
13G	03ALL	'TO->FROM'	'CLEARWATER - MILAN TAP 138KV CKT 1'	110	110	0.0394	119.726	'GEN560669 1-G10_057 0.6900'
13G	03ALL	'TO->FROM'	'CLEARWATER - MILAN TAP 138KV CKT 1'	110	110	0.52726	119.726	'GEN560669 1-G10_057 0.6900'
13G	03ALL	'TO->FROM'	'CLEARWATER - MILAN TAP 138KV CKT 1'	110	110	0.03696	119.726	'GEN560669 1-G10_057 0.6900'
13G	03ALL	'TO->FROM'	'CLEARWATER - MILAN TAP 138KV CKT 1'	110	110	0.04265	119.726	'GEN560669 1-G10_057 0.6900'
13G	03ALL	'TO->FROM'	'CLEARWATER - MILAN TAP 138KV CKT 1'	110	110	0.03608	119.726	'GEN560669 1-G10_057 0.6900'
13G	03ALL	'FROM->TO'	'HARPER - MILAN TAP 138KV CKT 1'	95.6	95.6	0.03559	145.0999	'GEN560669 1-G10_057 0.6900'
13G	03ALL	'FROM->TO'	'HARPER - MILAN TAP 138KV CKT 1'	95.6	95.6	0.06218	145.0999	'GEN560669 1-G10_057 0.6900'
13G	03ALL	'FROM->TO'	'HARPER - MILAN TAP 138KV CKT 1'	95.6	95.6	0.10851	145.0999	'GEN560669 1-G10_057 0.6900'
13G	03ALL	'FROM->TO'	'HARPER - MILAN TAP 138KV CKT 1'	95.6	95.6	0.04844	145.0999	'GEN560669 1-G10_057 0.6900'
13G	03ALL	'FROM->TO'	'HARPER - MILAN TAP 138KV CKT 1'	95.6	95.6	0.04844	145.0999	'GEN560669 1-G10_057 0.6900'
13G	03ALL	'FROM->TO'	'HARPER - MILAN TAP 138KV CKT 1'	95.6	95.6	0.2104	145.0999	'GEN560669 1-G10_057 0.6900'
13G	03ALL	'FROM->TO'	'HARPER - MILAN TAP 138KV CKT 1'	95.6	95.6	0.03753	145.0999	'GEN560669 1-G10_057 0.6900'
13G	03ALL	'FROM->TO'	'HARPER - MILAN TAP 138KV CKT 1'	95.6	95.6	0.0394	145.0999	'GEN560669 1-G10_057 0.6900'
13G	03ALL	'FROM->TO'	'HARPER - MILAN TAP 138KV CKT 1'	95.6	95.6	0.0394	145.0999	'GEN560669 1-G10_057 0.6900'
13G	03ALL	'FROM->TO'	'HARPER - MILAN TAP 138KV CKT 1'	95.6	95.6	0.52726	145.0999	'GEN560669 1-G10_057 0.6900'
13G	03ALL	'FROM->TO'	'HARPER - MILAN TAP 138KV CKT 1'	95.6	95.6	0.03696	145.0999	'GEN560669 1-G10_057 0.6900'
13G	03ALL	'FROM->TO'	'HARPER - MILAN TAP 138KV CKT 1'	95.6	95.6	0.04265	145.0999	'GEN560669 1-G10_057 0.6900'
13G	03ALL	'FROM->TO'	'HARPER - MILAN TAP 138KV CKT 1'	95.6	95.6	0.03608	145.0999	'GEN560669 1-G10_057 0.6900'

SEASON	GROUP	DIRECTION	MONITORED ELEMENT	RATE A (MVA)	RATE B (MVA)	TDF	TC%LOADING (%MVA)	CONTINGENCY NAME
13G	03ALL	'FROM->TO'	'SMOKYHL6 230.00 - SUMMIT 230KV CKT 1'	319	319	0.18549	101.8624	'GEN562113 1-G12_002_3 0.6900'
13G	03ALL	'FROM->TO'	'SMOKYHL6 230.00 - SUMMIT 230KV CKT 1'	319	319	0.08979	101.8624	'GEN562113 1-G12_002_3 0.6900'
13G	03ALL	'FROM->TO'	'SMOKYHL6 230.00 - SUMMIT 230KV CKT 1'	319	319	0.10326	101.8624	'GEN562113 1-G12_002_3 0.6900'
13G	03ALL	'FROM->TO'	'SMOKYHL6 230.00 - SUMMIT 230KV CKT 1'	319	319	0.12225	101.8624	'GEN562113 1-G12_002_3 0.6900'
13G	03ALL	'FROM->TO'	'SMOKYHL6 230.00 - SUMMIT 230KV CKT 1'	319	319	0.12225	101.8624	'GEN562113 1-G12_002_3 0.6900'
13G	03ALL	'FROM->TO'	'SMOKYHL6 230.00 - SUMMIT 230KV CKT 1'	319	319	0.07803	101.8624	'GEN562113 1-G12_002_3 0.6900'
13G	03ALL	'FROM->TO'	'SMOKYHL6 230.00 - SUMMIT 230KV CKT 1'	319	319	0.09991	101.8624	'GEN562113 1-G12_002_3 0.6900'
13G	03ALL	'FROM->TO'	'SMOKYHL6 230.00 - SUMMIT 230KV CKT 1'	319	319	0.11509	101.8624	'GEN562113 1-G12_002_3 0.6900'
13G	03ALL	'FROM->TO'	'SMOKYHL6 230.00 - SUMMIT 230KV CKT 1'	319	319	0.11509	101.8624	'GEN562113 1-G12_002_3 0.6900'
13G	03ALL	'FROM->TO'	'SMOKYHL6 230.00 - SUMMIT 230KV CKT 1'	319	319	0.62637	101.8624	'GEN562113 1-G12_002_3 0.6900'
13G	03ALL	'FROM->TO'	'SMOKYHL6 230.00 - SUMMIT 230KV CKT 1'	319	319	0.09991	101.8624	'GEN562113 1-G12_002_3 0.6900'
13G	03ALL	'FROM->TO'	'SMOKYHL6 230.00 - SUMMIT 230KV CKT 1'	319	319	0.1274	101.8624	'GEN562113 1-G12_002_3 0.6900'
13G	03ALL	'FROM->TO'	'SMOKYHL6 230.00 - SUMMIT 230KV CKT 1'	319	319	0.10261	101.8624	'GEN562113 1-G12_002_3 0.6900'
13G	03ALL	'TO->FROM'	'CLEARWATER - MILAN TAP 138KV CKT 1'	110	110	0.03559	119.7526	'GEN562113 1-G12_002_3 0.6900'
13G	03ALL	'TO->FROM'	'CLEARWATER - MILAN TAP 138KV CKT 1'	110	110	0.06218	119.7526	'GEN562113 1-G12_002_3 0.6900'
13G	03ALL	'TO->FROM'	'CLEARWATER - MILAN TAP 138KV CKT 1'	110	110	0.10851	119.7526	'GEN562113 1-G12_002_3 0.6900'
13G	03ALL	'TO->FROM'	'CLEARWATER - MILAN TAP 138KV CKT 1'	110	110	0.04844	119.7526	'GEN562113 1-G12_002_3 0.6900'
13G	03ALL	'TO->FROM'	'CLEARWATER - MILAN TAP 138KV CKT 1'	110	110	0.04844	119.7526	'GEN562113 1-G12_002_3 0.6900'
13G	03ALL	'TO->FROM'	'CLEARWATER - MILAN TAP 138KV CKT 1'	110	110	0.2104	119.7526	'GEN562113 1-G12_002_3 0.6900'
13G	03ALL	'TO->FROM'	'CLEARWATER - MILAN TAP 138KV CKT 1'	110	110	0.03753	119.7526	'GEN562113 1-G12_002_3 0.6900'
13G	03ALL	'TO->FROM'	'CLEARWATER - MILAN TAP 138KV CKT 1'	110	110	0.0394	119.7526	'GEN562113 1-G12_002_3 0.6900'
13G	03ALL	'TO->FROM'	'CLEARWATER - MILAN TAP 138KV CKT 1'	110	110	0.0394	119.7526	'GEN562113 1-G12_002_3 0.6900'
13G	03ALL	'TO->FROM'	'CLEARWATER - MILAN TAP 138KV CKT 1'	110	110	0.52726	119.7526	'GEN562113 1-G12_002_3 0.6900'
13G	03ALL	'TO->FROM'	'CLEARWATER - MILAN TAP 138KV CKT 1'	110	110	0.03696	119.7526	'GEN562113 1-G12_002_3 0.6900'
13G	03ALL	'TO->FROM'	'CLEARWATER - MILAN TAP 138KV CKT 1'	110	110	0.04265	119.7526	'GEN562113 1-G12_002_3 0.6900'
13G	03ALL	'TO->FROM'	'CLEARWATER - MILAN TAP 138KV CKT 1'	110	110	0.03608	119.7526	'GEN562113 1-G12_002_3 0.6900'
13G	03ALL	'FROM->TO'	'HARPER - MILAN TAP 138KV CKT 1'	95.6	95.6	0.03559	145.1598	'GEN562113 1-G12_002_3 0.6900'
13G	03ALL	'FROM->TO'	'HARPER - MILAN TAP 138KV CKT 1'	95.6	95.6	0.06218	145.1598	'GEN562113 1-G12_002_3 0.6900'
13G	03ALL	'FROM->TO'	'HARPER - MILAN TAP 138KV CKT 1'	95.6	95.6	0.10851	145.1598	'GEN562113 1-G12_002_3 0.6900'
13G	03ALL	'FROM->TO'	'HARPER - MILAN TAP 138KV CKT 1'	95.6	95.6	0.04844	145.1598	'GEN562113 1-G12_002_3 0.6900'
13G	03ALL	'FROM->TO'	'HARPER - MILAN TAP 138KV CKT 1'	95.6	95.6	0.04844	145.1598	'GEN562113 1-G12_002_3 0.6900'
13G	03ALL	'FROM->TO'	'HARPER - MILAN TAP 138KV CKT 1'	95.6	95.6	0.2104	145.1598	'GEN562113 1-G12_002_3 0.6900'
13G	03ALL	'FROM->TO'	'HARPER - MILAN TAP 138KV CKT 1'	95.6	95.6	0.03753	145.1598	'GEN562113 1-G12_002_3 0.6900'
13G	03ALL	'FROM->TO'	'HARPER - MILAN TAP 138KV CKT 1'	95.6	95.6	0.0394	145.1598	'GEN562113 1-G12_002_3 0.6900'
13G	03ALL	'FROM->TO'	'HARPER - MILAN TAP 138KV CKT 1'	95.6	95.6	0.0394	145.1598	'GEN562113 1-G12_002_3 0.6900'
13G	03ALL	'FROM->TO'	'HARPER - MILAN TAP 138KV CKT 1'	95.6	95.6	0.52726	145.1598	'GEN562113 1-G12_002_3 0.6900'
13G	03ALL	'FROM->TO'	'HARPER - MILAN TAP 138KV CKT 1'	95.6	95.6	0.03696	145.1598	'GEN562113 1-G12_002_3 0.6900'
13G	03ALL	'FROM->TO'	'HARPER - MILAN TAP 138KV CKT 1'	95.6	95.6	0.04265	145.1598	'GEN562113 1-G12_002_3 0.6900'
13G	03ALL	'FROM->TO'	'HARPER - MILAN TAP 138KV CKT 1'	95.6	95.6	0.03608	145.1598	'GEN562113 1-G12_002_3 0.6900'
13G	03ALL	'FROM->TO'	'SMOKYHL6 230.00 - SUMMIT 230KV CKT 1'	319	319	0.18549	103.2442	'GEN562118 1-G12_007_2 13.800'
13G	03ALL	'FROM->TO'	'SMOKYHL6 230.00 - SUMMIT 230KV CKT 1'	319	319	0.08979	103.2442	'GEN562118 1-G12_007_2 13.800'
13G	03ALL	'FROM->TO'	'SMOKYHL6 230.00 - SUMMIT 230KV CKT 1'	319	319	0.10326	103.2442	'GEN562118 1-G12_007_2 13.800'
13G	03ALL	'FROM->TO'	'SMOKYHL6 230.00 - SUMMIT 230KV CKT 1'	319	319	0.12225	103.2442	'GEN562118 1-G12_007_2 13.800'
13G	03ALL	'FROM->TO'	'SMOKYHL6 230.00 - SUMMIT 230KV CKT 1'	319	319	0.12225	103.2442	'GEN562118 1-G12_007_2 13.800'
13G	03ALL	'FROM->TO'	'SMOKYHL6 230.00 - SUMMIT 230KV CKT 1'	319	319	0.07803	103.2442	'GEN562118 1-G12_007_2 13.800'
13G	03ALL	'FROM->TO'	'SMOKYHL6 230.00 - SUMMIT 230KV CKT 1'	319	319	0.09991	103.2442	'GEN562118 1-G12_007_2 13.800'
13G	03ALL	'FROM->TO'	'SMOKYHL6 230.00 - SUMMIT 230KV CKT 1'	319	319	0.11509	103.2442	'GEN562118 1-G12_007_2 13.800'
13G	03ALL	'FROM->TO'	'SMOKYHL6 230.00 - SUMMIT 230KV CKT 1'	319	319	0.11509	103.2442	'GEN562118 1-G12_007_2 13.800'
13G	03ALL	'FROM->TO'	'SMOKYHL6 230.00 - SUMMIT 230KV CKT 1'	319	319	0.62637	103.2442	'GEN562118 1-G12_007_2 13.800'
13G	03ALL	'FROM->TO'	'SMOKYHL6 230.00 - SUMMIT 230KV CKT 1'	319	319	0.09991	103.2442	'GEN562118 1-G12_007_2 13.800'
13G	03ALL	'FROM->TO'	'SMOKYHL6 230.00 - SUMMIT 230KV CKT 1'	319	319	0.1274	103.2442	'GEN562118 1-G12_007_2 13.800'
13G	03ALL	'FROM->TO'	'SMOKYHL6 230.00 - SUMMIT 230KV CKT 1'	319	319	0.10261	103.2442	'GEN562118 1-G12_007_2 13.800'
13G	03ALL	'FROM->TO'	'SMOKYHL6 230.00 - SUMMIT 230KV CKT 1'	319	319	0.18549	103.2442	'GEN562119 1-G12_007_3 13.800'
13G	03ALL	'FROM->TO'	'SMOKYHL6 230.00 - SUMMIT 230KV CKT 1'	319	319	0.08979	103.2442	'GEN562119 1-G12_007_3 13.800'
13G	03ALL	'FROM->TO'	'SMOKYHL6 230.00 - SUMMIT 230KV CKT 1'	319	319	0.10326	103.2442	'GEN562119 1-G12_007_3 13.800'
13G	03ALL	'FROM->TO'	'SMOKYHL6 230.00 - SUMMIT 230KV CKT 1'	319	319	0.12225	103.2442	'GEN562119 1-G12_007_3 13.800'
13G	03ALL	'FROM->TO'	'SMOKYHL6 230.00 - SUMMIT 230KV CKT 1'	319	319	0.12225	103.2442	'GEN562119 1-G12_007_3 13.800'
13G	03ALL	'FROM->TO'	'SMOKYHL6 230.00 - SUMMIT 230KV CKT 1'	319	319	0.07803	103.2442	'GEN562119 1-G12_007_3 13.800'
13G	03ALL	'FROM->TO'	'SMOKYHL6 230.00 - SUMMIT 230KV CKT 1'	319	319	0.09991	103.2442	'GEN562119 1-G12_007_3 13.800'
13G	03ALL	'FROM->TO'	'SMOKYHL6 230.00 - SUMMIT 230KV CKT 1'	319	319	0.11509	103.2442	'GEN562119 1-G12_007_3 13.800'
13G	03ALL	'FROM->TO'	'SMOKYHL6 230.00 - SUMMIT 230KV CKT 1'	319	319	0.11509	103.2442	'GEN562119 1-G12_007_3 13.800'
13G	03ALL	'FROM->TO'	'SMOKYHL6 230.00 - SUMMIT 230KV CKT 1'	319	319	0.62637	103.2442	'GEN562119 1-G12_007_3 13.800'
13G	03ALL	'FROM->TO'	'SMOKYHL6 230.00 - SUMMIT 230KV CKT 1'	319	319	0.09991	103.2442	'GEN562119 1-G12_007_3 13.800'
13G	03ALL	'FROM->TO'	'SMOKYHL6 230.00 - SUMMIT 230KV CKT 1'	319	319	0.1274	103.2442	'GEN562119 1-G12_007_3 13.800'

SEASON	GROUP	DIRECTION	MONITORED ELEMENT	RATE A (MVA)	RATE B (MVA)	TDF	TC%LOADING (%MVA)	CONTINGENCY NAME
13G	03ALL	'FROM->TO'	'SMOKYHL6 230.00 - SUMMIT 230KV CKT 1'	319	319	0.10261	103.2442	'GEN562119 1-G12_007_3 13.800'
13G	03ALL	'FROM->TO'	'SMOKYHL6 230.00 - SUMMIT 230KV CKT 1'	319	319	0.18549	101.4159	'GEN640009 1-COOPER NUCLEAR STATION'
13G	03ALL	'FROM->TO'	'SMOKYHL6 230.00 - SUMMIT 230KV CKT 1'	319	319	0.08979	101.4159	'GEN640009 1-COOPER NUCLEAR STATION'
13G	03ALL	'FROM->TO'	'SMOKYHL6 230.00 - SUMMIT 230KV CKT 1'	319	319	0.10326	101.4159	'GEN640009 1-COOPER NUCLEAR STATION'
13G	03ALL	'FROM->TO'	'SMOKYHL6 230.00 - SUMMIT 230KV CKT 1'	319	319	0.12225	101.4159	'GEN640009 1-COOPER NUCLEAR STATION'
13G	03ALL	'FROM->TO'	'SMOKYHL6 230.00 - SUMMIT 230KV CKT 1'	319	319	0.12225	101.4159	'GEN640009 1-COOPER NUCLEAR STATION'
13G	03ALL	'FROM->TO'	'SMOKYHL6 230.00 - SUMMIT 230KV CKT 1'	319	319	0.07803	101.4159	'GEN640009 1-COOPER NUCLEAR STATION'
13G	03ALL	'FROM->TO'	'SMOKYHL6 230.00 - SUMMIT 230KV CKT 1'	319	319	0.09991	101.4159	'GEN640009 1-COOPER NUCLEAR STATION'
13G	03ALL	'FROM->TO'	'SMOKYHL6 230.00 - SUMMIT 230KV CKT 1'	319	319	0.11509	101.4159	'GEN640009 1-COOPER NUCLEAR STATION'
13G	03ALL	'FROM->TO'	'SMOKYHL6 230.00 - SUMMIT 230KV CKT 1'	319	319	0.11509	101.4159	'GEN640009 1-COOPER NUCLEAR STATION'
13G	03ALL	'FROM->TO'	'SMOKYHL6 230.00 - SUMMIT 230KV CKT 1'	319	319	0.62637	101.4159	'GEN640009 1-COOPER NUCLEAR STATION'
13G	03ALL	'FROM->TO'	'SMOKYHL6 230.00 - SUMMIT 230KV CKT 1'	319	319	0.09991	101.4159	'GEN640009 1-COOPER NUCLEAR STATION'
13G	03ALL	'FROM->TO'	'SMOKYHL6 230.00 - SUMMIT 230KV CKT 1'	319	319	0.1274	101.4159	'GEN640009 1-COOPER NUCLEAR STATION'
13G	03ALL	'FROM->TO'	'SMOKYHL6 230.00 - SUMMIT 230KV CKT 1'	319	319	0.10261	101.4159	'GEN640009 1-COOPER NUCLEAR STATION'
13G	03ALL	'TO->FROM'	'CLEARWATER - MILAN TAP 138KV CKT 1'	110	110	0.03559	118.8796	'GEN640009 1-COOPER NUCLEAR STATION'
13G	03ALL	'TO->FROM'	'CLEARWATER - MILAN TAP 138KV CKT 1'	110	110	0.06218	118.8796	'GEN640009 1-COOPER NUCLEAR STATION'
13G	03ALL	'TO->FROM'	'CLEARWATER - MILAN TAP 138KV CKT 1'	110	110	0.10851	118.8796	'GEN640009 1-COOPER NUCLEAR STATION'
13G	03ALL	'TO->FROM'	'CLEARWATER - MILAN TAP 138KV CKT 1'	110	110	0.04844	118.8796	'GEN640009 1-COOPER NUCLEAR STATION'
13G	03ALL	'TO->FROM'	'CLEARWATER - MILAN TAP 138KV CKT 1'	110	110	0.04844	118.8796	'GEN640009 1-COOPER NUCLEAR STATION'
13G	03ALL	'TO->FROM'	'CLEARWATER - MILAN TAP 138KV CKT 1'	110	110	0.2104	118.8796	'GEN640009 1-COOPER NUCLEAR STATION'
13G	03ALL	'TO->FROM'	'CLEARWATER - MILAN TAP 138KV CKT 1'	110	110	0.03753	118.8796	'GEN640009 1-COOPER NUCLEAR STATION'
13G	03ALL	'TO->FROM'	'CLEARWATER - MILAN TAP 138KV CKT 1'	110	110	0.0394	118.8796	'GEN640009 1-COOPER NUCLEAR STATION'
13G	03ALL	'TO->FROM'	'CLEARWATER - MILAN TAP 138KV CKT 1'	110	110	0.0394	118.8796	'GEN640009 1-COOPER NUCLEAR STATION'
13G	03ALL	'TO->FROM'	'CLEARWATER - MILAN TAP 138KV CKT 1'	110	110	0.52726	118.8796	'GEN640009 1-COOPER NUCLEAR STATION'
13G	03ALL	'TO->FROM'	'CLEARWATER - MILAN TAP 138KV CKT 1'	110	110	0.03696	118.8796	'GEN640009 1-COOPER NUCLEAR STATION'
13G	03ALL	'TO->FROM'	'CLEARWATER - MILAN TAP 138KV CKT 1'	110	110	0.04265	118.8796	'GEN640009 1-COOPER NUCLEAR STATION'
13G	03ALL	'TO->FROM'	'CLEARWATER - MILAN TAP 138KV CKT 1'	110	110	0.03608	118.8796	'GEN640009 1-COOPER NUCLEAR STATION'
13G	03ALL	'FROM->TO'	'HARPER - MILAN TAP 138KV CKT 1'	95.6	95.6	0.03559	144.1426	'GEN640009 1-COOPER NUCLEAR STATION'
13G	03ALL	'FROM->TO'	'HARPER - MILAN TAP 138KV CKT 1'	95.6	95.6	0.06218	144.1426	'GEN640009 1-COOPER NUCLEAR STATION'
13G	03ALL	'FROM->TO'	'HARPER - MILAN TAP 138KV CKT 1'	95.6	95.6	0.10851	144.1426	'GEN640009 1-COOPER NUCLEAR STATION'
13G	03ALL	'FROM->TO'	'HARPER - MILAN TAP 138KV CKT 1'	95.6	95.6	0.04844	144.1426	'GEN640009 1-COOPER NUCLEAR STATION'
13G	03ALL	'FROM->TO'	'HARPER - MILAN TAP 138KV CKT 1'	95.6	95.6	0.04844	144.1426	'GEN640009 1-COOPER NUCLEAR STATION'
13G	03ALL	'FROM->TO'	'HARPER - MILAN TAP 138KV CKT 1'	95.6	95.6	0.2104	144.1426	'GEN640009 1-COOPER NUCLEAR STATION'
13G	03ALL	'FROM->TO'	'HARPER - MILAN TAP 138KV CKT 1'	95.6	95.6	0.03753	144.1426	'GEN640009 1-COOPER NUCLEAR STATION'
13G	03ALL	'FROM->TO'	'HARPER - MILAN TAP 138KV CKT 1'	95.6	95.6	0.0394	144.1426	'GEN640009 1-COOPER NUCLEAR STATION'
13G	03ALL	'FROM->TO'	'HARPER - MILAN TAP 138KV CKT 1'	95.6	95.6	0.0394	144.1426	'GEN640009 1-COOPER NUCLEAR STATION'
13G	03ALL	'FROM->TO'	'HARPER - MILAN TAP 138KV CKT 1'	95.6	95.6	0.52726	144.1426	'GEN640009 1-COOPER NUCLEAR STATION'
13G	03ALL	'FROM->TO'	'HARPER - MILAN TAP 138KV CKT 1'	95.6	95.6	0.03696	144.1426	'GEN640009 1-COOPER NUCLEAR STATION'
13G	03ALL	'FROM->TO'	'HARPER - MILAN TAP 138KV CKT 1'	95.6	95.6	0.04265	144.1426	'GEN640009 1-COOPER NUCLEAR STATION'
13G	03ALL	'FROM->TO'	'HARPER - MILAN TAP 138KV CKT 1'	95.6	95.6	0.03608	144.1426	'GEN640009 1-COOPER NUCLEAR STATION'
13G	03ALL	'TO->FROM'	'CLEARWATER - MILAN TAP 138KV CKT 1'	110	110	0.03559	116.2767	'GEN640010 1-GERALD GENTLEMAN STATION UNIT 1'
13G	03ALL	'TO->FROM'	'CLEARWATER - MILAN TAP 138KV CKT 1'	110	110	0.06218	116.2767	'GEN640010 1-GERALD GENTLEMAN STATION UNIT 1'
13G	03ALL	'TO->FROM'	'CLEARWATER - MILAN TAP 138KV CKT 1'	110	110	0.10851	116.2767	'GEN640010 1-GERALD GENTLEMAN STATION UNIT 1'
13G	03ALL	'TO->FROM'	'CLEARWATER - MILAN TAP 138KV CKT 1'	110	110	0.04844	116.2767	'GEN640010 1-GERALD GENTLEMAN STATION UNIT 1'
13G	03ALL	'TO->FROM'	'CLEARWATER - MILAN TAP 138KV CKT 1'	110	110	0.04844	116.2767	'GEN640010 1-GERALD GENTLEMAN STATION UNIT 1'
13G	03ALL	'TO->FROM'	'CLEARWATER - MILAN TAP 138KV CKT 1'	110	110	0.2104	116.2767	'GEN640010 1-GERALD GENTLEMAN STATION UNIT 1'
13G	03ALL	'TO->FROM'	'CLEARWATER - MILAN TAP 138KV CKT 1'	110	110	0.03753	116.2767	'GEN640010 1-GERALD GENTLEMAN STATION UNIT 1'
13G	03ALL	'TO->FROM'	'CLEARWATER - MILAN TAP 138KV CKT 1'	110	110	0.0394	116.2767	'GEN640010 1-GERALD GENTLEMAN STATION UNIT 1'
13G	03ALL	'TO->FROM'	'CLEARWATER - MILAN TAP 138KV CKT 1'	110	110	0.0394	116.2767	'GEN640010 1-GERALD GENTLEMAN STATION UNIT 1'
13G	03ALL	'TO->FROM'	'CLEARWATER - MILAN TAP 138KV CKT 1'	110	110	0.52726	116.2767	'GEN640010 1-GERALD GENTLEMAN STATION UNIT 1'
13G	03ALL	'TO->FROM'	'CLEARWATER - MILAN TAP 138KV CKT 1'	110	110	0.03696	116.2767	'GEN640010 1-GERALD GENTLEMAN STATION UNIT 1'
13G	03ALL	'TO->FROM'	'CLEARWATER - MILAN TAP 138KV CKT 1'	110	110	0.04265	116.2767	'GEN640010 1-GERALD GENTLEMAN STATION UNIT 1'
13G	03ALL	'TO->FROM'	'CLEARWATER - MILAN TAP 138KV CKT 1'	110	110	0.03608	116.2767	'GEN640010 1-GERALD GENTLEMAN STATION UNIT 1'
13G	03ALL	'TO->FROM'	'GREENSBURG - SSTARTP3 115.00 115KV CKT 1	120.7	129.5	0.17753	102.7634	'GEN640010 1-GERALD GENTLEMAN STATION UNIT 1'
13G	03ALL	'TO->FROM'	'GREENSBURG - SSTARTP3 115.00 115KV CKT 1	120.7	129.5	0.04472	102.7634	'GEN640010 1-GERALD GENTLEMAN STATION UNIT 1'
13G	03ALL	'TO->FROM'	'GREENSBURG - SSTARTP3 115.00 115KV CKT 1	120.7	129.5	0.04472	102.7634	'GEN640010 1-GERALD GENTLEMAN STATION UNIT 1'
13G	03ALL	'TO->FROM'	'GREENSBURG - SSTARTP3 115.00 115KV CKT 1	120.7	129.5	0.39904	102.7634	'GEN640010 1-GERALD GENTLEMAN STATION UNIT 1'
13G	03ALL	'TO->FROM'	'GREENSBURG - SSTARTP3 115.00 115KV CKT 1	120.7	129.5	0.0299	102.7634	'GEN640010 1-GERALD GENTLEMAN STATION UNIT 1'
13G	03ALL	'TO->FROM'	'GREENSBURG - SSTARTP3 115.00 115KV CKT 1	120.7	129.5	0.03411	102.7634	'GEN640010 1-GERALD GENTLEMAN STATION UNIT 1'
13G	03ALL	'TO->FROM'	'GREENSBURG - SSTARTP3 115.00 115KV CKT 1	120.7	129.5	0.03411	102.7634	'GEN640010 1-GERALD GENTLEMAN STATION UNIT 1'
13G	03ALL	'TO->FROM'	'GREENSBURG - SSTARTP3 115.00 115KV CKT 1	120.7	129.5	0.02996	102.7634	'GEN640010 1-GERALD GENTLEMAN STATION UNIT 1'
13G	03ALL	'TO->FROM'	'GREENSBURG - SSTARTP3 115.00 115KV CKT 1	120.7	129.5	0.03691	102.7634	'GEN640010 1-GERALD GENTLEMAN STATION UNIT 1'
13G	03ALL	'TO->FROM'	'GREENSBURG - SSTARTP3 115.00 115KV CKT 1	120.7	129.5	0.03126	102.7634	'GEN640010 1-GERALD GENTLEMAN STATION UNIT 1'
13G	03ALL	'FROM->TO'	'HARPER - MILAN TAP 138KV CKT 1'	95.6	95.6	0.03559	141.1805	'GEN640010 1-GERALD GENTLEMAN STATION UNIT 1'

SEASON	GROUP	DIRECTION	MONITORED ELEMENT	RATE A (MVA)	RATE B (MVA)	TDF	TC%LOADING (%MVA)	CONTINGENCY NAME
13G	03ALL	'FROM->TO'	'HARPER - MILAN TAP 138KV CKT 1'	95.6	95.6	0.06218	141.1805	'GEN640010 1-GERALD GENTLEMAN STATION UNIT 1'
13G	03ALL	'FROM->TO'	'HARPER - MILAN TAP 138KV CKT 1'	95.6	95.6	0.10851	141.1805	'GEN640010 1-GERALD GENTLEMAN STATION UNIT 1'
13G	03ALL	'FROM->TO'	'HARPER - MILAN TAP 138KV CKT 1'	95.6	95.6	0.04844	141.1805	'GEN640010 1-GERALD GENTLEMAN STATION UNIT 1'
13G	03ALL	'FROM->TO'	'HARPER - MILAN TAP 138KV CKT 1'	95.6	95.6	0.04844	141.1805	'GEN640010 1-GERALD GENTLEMAN STATION UNIT 1'
13G	03ALL	'FROM->TO'	'HARPER - MILAN TAP 138KV CKT 1'	95.6	95.6	0.2104	141.1805	'GEN640010 1-GERALD GENTLEMAN STATION UNIT 1'
13G	03ALL	'FROM->TO'	'HARPER - MILAN TAP 138KV CKT 1'	95.6	95.6	0.03753	141.1805	'GEN640010 1-GERALD GENTLEMAN STATION UNIT 1'
13G	03ALL	'FROM->TO'	'HARPER - MILAN TAP 138KV CKT 1'	95.6	95.6	0.0394	141.1805	'GEN640010 1-GERALD GENTLEMAN STATION UNIT 1'
13G	03ALL	'FROM->TO'	'HARPER - MILAN TAP 138KV CKT 1'	95.6	95.6	0.0394	141.1805	'GEN640010 1-GERALD GENTLEMAN STATION UNIT 1'
13G	03ALL	'FROM->TO'	'HARPER - MILAN TAP 138KV CKT 1'	95.6	95.6	0.52726	141.1805	'GEN640010 1-GERALD GENTLEMAN STATION UNIT 1'
13G	03ALL	'FROM->TO'	'HARPER - MILAN TAP 138KV CKT 1'	95.6	95.6	0.03696	141.1805	'GEN640010 1-GERALD GENTLEMAN STATION UNIT 1'
13G	03ALL	'FROM->TO'	'HARPER - MILAN TAP 138KV CKT 1'	95.6	95.6	0.04265	141.1805	'GEN640010 1-GERALD GENTLEMAN STATION UNIT 1'
13G	03ALL	'FROM->TO'	'HARPER - MILAN TAP 138KV CKT 1'	95.6	95.6	0.03608	141.1805	'GEN640010 1-GERALD GENTLEMAN STATION UNIT 1'
13G	03ALL	'TO->FROM'	'CLEARWATER - MILAN TAP 138KV CKT 1'	110	110	0.03559	116.4184	'GEN640011 2-GERALD GENTLEMAN STATION UNIT 2'
13G	03ALL	'TO->FROM'	'CLEARWATER - MILAN TAP 138KV CKT 1'	110	110	0.06218	116.4184	'GEN640011 2-GERALD GENTLEMAN STATION UNIT 2'
13G	03ALL	'TO->FROM'	'CLEARWATER - MILAN TAP 138KV CKT 1'	110	110	0.10851	116.4184	'GEN640011 2-GERALD GENTLEMAN STATION UNIT 2'
13G	03ALL	'TO->FROM'	'CLEARWATER - MILAN TAP 138KV CKT 1'	110	110	0.04844	116.4184	'GEN640011 2-GERALD GENTLEMAN STATION UNIT 2'
13G	03ALL	'TO->FROM'	'CLEARWATER - MILAN TAP 138KV CKT 1'	110	110	0.04844	116.4184	'GEN640011 2-GERALD GENTLEMAN STATION UNIT 2'
13G	03ALL	'TO->FROM'	'CLEARWATER - MILAN TAP 138KV CKT 1'	110	110	0.2104	116.4184	'GEN640011 2-GERALD GENTLEMAN STATION UNIT 2'
13G	03ALL	'TO->FROM'	'CLEARWATER - MILAN TAP 138KV CKT 1'	110	110	0.03753	116.4184	'GEN640011 2-GERALD GENTLEMAN STATION UNIT 2'
13G	03ALL	'TO->FROM'	'CLEARWATER - MILAN TAP 138KV CKT 1'	110	110	0.0394	116.4184	'GEN640011 2-GERALD GENTLEMAN STATION UNIT 2'
13G	03ALL	'TO->FROM'	'CLEARWATER - MILAN TAP 138KV CKT 1'	110	110	0.0394	116.4184	'GEN640011 2-GERALD GENTLEMAN STATION UNIT 2'
13G	03ALL	'TO->FROM'	'CLEARWATER - MILAN TAP 138KV CKT 1'	110	110	0.52726	116.4184	'GEN640011 2-GERALD GENTLEMAN STATION UNIT 2'
13G	03ALL	'TO->FROM'	'CLEARWATER - MILAN TAP 138KV CKT 1'	110	110	0.03696	116.4184	'GEN640011 2-GERALD GENTLEMAN STATION UNIT 2'
13G	03ALL	'TO->FROM'	'CLEARWATER - MILAN TAP 138KV CKT 1'	110	110	0.04265	116.4184	'GEN640011 2-GERALD GENTLEMAN STATION UNIT 2'
13G	03ALL	'TO->FROM'	'CLEARWATER - MILAN TAP 138KV CKT 1'	110	110	0.03608	116.4184	'GEN640011 2-GERALD GENTLEMAN STATION UNIT 2'
13G	03ALL	'TO->FROM'	'GREENSBURG - SSTARTP3 115.00 115KV CKT 1	120.7	129.5	0.17753	102.8335	'GEN640011 2-GERALD GENTLEMAN STATION UNIT 2'
13G	03ALL	'TO->FROM'	'GREENSBURG - SSTARTP3 115.00 115KV CKT 1	120.7	129.5	0.04472	102.8335	'GEN640011 2-GERALD GENTLEMAN STATION UNIT 2'
13G	03ALL	'TO->FROM'	'GREENSBURG - SSTARTP3 115.00 115KV CKT 1	120.7	129.5	0.04472	102.8335	'GEN640011 2-GERALD GENTLEMAN STATION UNIT 2'
13G	03ALL	'TO->FROM'	'GREENSBURG - SSTARTP3 115.00 115KV CKT 1	120.7	129.5	0.39904	102.8335	'GEN640011 2-GERALD GENTLEMAN STATION UNIT 2'
13G	03ALL	'TO->FROM'	'GREENSBURG - SSTARTP3 115.00 115KV CKT 1	120.7	129.5	0.0299	102.8335	'GEN640011 2-GERALD GENTLEMAN STATION UNIT 2'
13G	03ALL	'TO->FROM'	'GREENSBURG - SSTARTP3 115.00 115KV CKT 1	120.7	129.5	0.03411	102.8335	'GEN640011 2-GERALD GENTLEMAN STATION UNIT 2'
13G	03ALL	'TO->FROM'	'GREENSBURG - SSTARTP3 115.00 115KV CKT 1	120.7	129.5	0.03411	102.8335	'GEN640011 2-GERALD GENTLEMAN STATION UNIT 2'
13G	03ALL	'TO->FROM'	'GREENSBURG - SSTARTP3 115.00 115KV CKT 1	120.7	129.5	0.02996	102.8335	'GEN640011 2-GERALD GENTLEMAN STATION UNIT 2'
13G	03ALL	'TO->FROM'	'GREENSBURG - SSTARTP3 115.00 115KV CKT 1	120.7	129.5	0.03691	102.8335	'GEN640011 2-GERALD GENTLEMAN STATION UNIT 2'
13G	03ALL	'TO->FROM'	'GREENSBURG - SSTARTP3 115.00 115KV CKT 1	120.7	129.5	0.03126	102.8335	'GEN640011 2-GERALD GENTLEMAN STATION UNIT 2'
13G	03ALL	'FROM->TO'	'HARPER - MILAN TAP 138KV CKT 1'	95.6	95.6	0.03559	141.3427	'GEN640011 2-GERALD GENTLEMAN STATION UNIT 2'
13G	03ALL	'FROM->TO'	'HARPER - MILAN TAP 138KV CKT 1'	95.6	95.6	0.06218	141.3427	'GEN640011 2-GERALD GENTLEMAN STATION UNIT 2'
13G	03ALL	'FROM->TO'	'HARPER - MILAN TAP 138KV CKT 1'	95.6	95.6	0.10851	141.3427	'GEN640011 2-GERALD GENTLEMAN STATION UNIT 2'
13G	03ALL	'FROM->TO'	'HARPER - MILAN TAP 138KV CKT 1'	95.6	95.6	0.04844	141.3427	'GEN640011 2-GERALD GENTLEMAN STATION UNIT 2'
13G	03ALL	'FROM->TO'	'HARPER - MILAN TAP 138KV CKT 1'	95.6	95.6	0.04844	141.3427	'GEN640011 2-GERALD GENTLEMAN STATION UNIT 2'
13G	03ALL	'FROM->TO'	'HARPER - MILAN TAP 138KV CKT 1'	95.6	95.6	0.2104	141.3427	'GEN640011 2-GERALD GENTLEMAN STATION UNIT 2'
13G	03ALL	'FROM->TO'	'HARPER - MILAN TAP 138KV CKT 1'	95.6	95.6	0.03753	141.3427	'GEN640011 2-GERALD GENTLEMAN STATION UNIT 2'
13G	03ALL	'FROM->TO'	'HARPER - MILAN TAP 138KV CKT 1'	95.6	95.6	0.0394	141.3427	'GEN640011 2-GERALD GENTLEMAN STATION UNIT 2'
13G	03ALL	'FROM->TO'	'HARPER - MILAN TAP 138KV CKT 1'	95.6	95.6	0.0394	141.3427	'GEN640011 2-GERALD GENTLEMAN STATION UNIT 2'
13G	03ALL	'FROM->TO'	'HARPER - MILAN TAP 138KV CKT 1'	95.6	95.6	0.52726	141.3427	'GEN640011 2-GERALD GENTLEMAN STATION UNIT 2'
13G	03ALL	'FROM->TO'	'HARPER - MILAN TAP 138KV CKT 1'	95.6	95.6	0.03696	141.3427	'GEN640011 2-GERALD GENTLEMAN STATION UNIT 2'
13G	03ALL	'FROM->TO'	'HARPER - MILAN TAP 138KV CKT 1'	95.6	95.6	0.04265	141.3427	'GEN640011 2-GERALD GENTLEMAN STATION UNIT 2'
13G	03ALL	'FROM->TO'	'HARPER - MILAN TAP 138KV CKT 1'	95.6	95.6	0.03608	141.3427	'GEN640011 2-GERALD GENTLEMAN STATION UNIT 2'
13G	03ALL	'FROM->TO'	'SMOKYHL6 230.00 - SUMMIT 230KV CKT 1'	319	319	0.18549	102.8507	'GEN641089 2-ENERGY CENTER 2'
13G	03ALL	'FROM->TO'	'SMOKYHL6 230.00 - SUMMIT 230KV CKT 1'	319	319	0.08979	102.8507	'GEN641089 2-ENERGY CENTER 2'
13G	03ALL	'FROM->TO'	'SMOKYHL6 230.00 - SUMMIT 230KV CKT 1'	319	319	0.10326	102.8507	'GEN641089 2-ENERGY CENTER 2'
13G	03ALL	'FROM->TO'	'SMOKYHL6 230.00 - SUMMIT 230KV CKT 1'	319	319	0.12225	102.8507	'GEN641089 2-ENERGY CENTER 2'
13G	03ALL	'FROM->TO'	'SMOKYHL6 230.00 - SUMMIT 230KV CKT 1'	319	319	0.12225	102.8507	'GEN641089 2-ENERGY CENTER 2'
13G	03ALL	'FROM->TO'	'SMOKYHL6 230.00 - SUMMIT 230KV CKT 1'	319	319	0.07803	102.8507	'GEN641089 2-ENERGY CENTER 2'
13G	03ALL	'FROM->TO'	'SMOKYHL6 230.00 - SUMMIT 230KV CKT 1'	319	319	0.09991	102.8507	'GEN641089 2-ENERGY CENTER 2'
13G	03ALL	'FROM->TO'	'SMOKYHL6 230.00 - SUMMIT 230KV CKT 1'	319	319	0.11509	102.8507	'GEN641089 2-ENERGY CENTER 2'
13G	03ALL	'FROM->TO'	'SMOKYHL6 230.00 - SUMMIT 230KV CKT 1'	319	319	0.11509	102.8507	'GEN641089 2-ENERGY CENTER 2'
13G	03ALL	'FROM->TO'	'SMOKYHL6 230.00 - SUMMIT 230KV CKT 1'	319	319	0.62637	102.8507	'GEN641089 2-ENERGY CENTER 2'
13G	03ALL	'FROM->TO'	'SMOKYHL6 230.00 - SUMMIT 230KV CKT 1'	319	319	0.09991	102.8507	'GEN641089 2-ENERGY CENTER 2'
13G	03ALL	'FROM->TO'	'SMOKYHL6 230.00 - SUMMIT 230KV CKT 1'	319	319	0.1274	102.8507	'GEN641089 2-ENERGY CENTER 2'
13G	03ALL	'FROM->TO'	'SMOKYHL6 230.00 - SUMMIT 230KV CKT 1'	319	319	0.10261	102.8507	'GEN641089 2-ENERGY CENTER 2'
13G	03ALL	'FROM->TO'	'SMOKYHL6 230.00 - SUMMIT 230KV CKT 1'	319	319	0.18549	103.8571	'GEN642067 1-PLATTE'
13G	03ALL	'FROM->TO'	'SMOKYHL6 230.00 - SUMMIT 230KV CKT 1'	319	319	0.08979	103.8571	'GEN642067 1-PLATTE'
13G	03ALL	'FROM->TO'	'SMOKYHL6 230.00 - SUMMIT 230KV CKT 1'	319	319	0.10326	103.8571	'GEN642067 1-PLATTE'

SEASON	GROUP	DIRECTION	MONITORED ELEMENT	RATE A (MVA)	RATE B (MVA)	TDF	TC%LOADING (%MVA)	CONTINGENCY NAME
13G	03ALL	'FROM->TO'	'SMOKYHL6 230.00 - SUMMIT 230KV CKT 1'	319	319	0.12225	103.8571	'GEN642067 1-PLATTE'
13G	03ALL	'FROM->TO'	'SMOKYHL6 230.00 - SUMMIT 230KV CKT 1'	319	319	0.12225	103.8571	'GEN642067 1-PLATTE'
13G	03ALL	'FROM->TO'	'SMOKYHL6 230.00 - SUMMIT 230KV CKT 1'	319	319	0.07803	103.8571	'GEN642067 1-PLATTE'
13G	03ALL	'FROM->TO'	'SMOKYHL6 230.00 - SUMMIT 230KV CKT 1'	319	319	0.09991	103.8571	'GEN642067 1-PLATTE'
13G	03ALL	'FROM->TO'	'SMOKYHL6 230.00 - SUMMIT 230KV CKT 1'	319	319	0.11509	103.8571	'GEN642067 1-PLATTE'
13G	03ALL	'FROM->TO'	'SMOKYHL6 230.00 - SUMMIT 230KV CKT 1'	319	319	0.11509	103.8571	'GEN642067 1-PLATTE'
13G	03ALL	'FROM->TO'	'SMOKYHL6 230.00 - SUMMIT 230KV CKT 1'	319	319	0.62637	103.8571	'GEN642067 1-PLATTE'
13G	03ALL	'FROM->TO'	'SMOKYHL6 230.00 - SUMMIT 230KV CKT 1'	319	319	0.09991	103.8571	'GEN642067 1-PLATTE'
13G	03ALL	'FROM->TO'	'SMOKYHL6 230.00 - SUMMIT 230KV CKT 1'	319	319	0.1274	103.8571	'GEN642067 1-PLATTE'
13G	03ALL	'FROM->TO'	'SMOKYHL6 230.00 - SUMMIT 230KV CKT 1'	319	319	0.10261	103.8571	'GEN642067 1-PLATTE'
13G	03ALL	'FROM->TO'	'SMOKYHL6 230.00 - SUMMIT 230KV CKT 1'	319	319	0.18549	101.6282	'GEN645001 1-FORT CALHOUN 1'
13G	03ALL	'FROM->TO'	'SMOKYHL6 230.00 - SUMMIT 230KV CKT 1'	319	319	0.08979	101.6282	'GEN645001 1-FORT CALHOUN 1'
13G	03ALL	'FROM->TO'	'SMOKYHL6 230.00 - SUMMIT 230KV CKT 1'	319	319	0.10326	101.6282	'GEN645001 1-FORT CALHOUN 1'
13G	03ALL	'FROM->TO'	'SMOKYHL6 230.00 - SUMMIT 230KV CKT 1'	319	319	0.12225	101.6282	'GEN645001 1-FORT CALHOUN 1'
13G	03ALL	'FROM->TO'	'SMOKYHL6 230.00 - SUMMIT 230KV CKT 1'	319	319	0.12225	101.6282	'GEN645001 1-FORT CALHOUN 1'
13G	03ALL	'FROM->TO'	'SMOKYHL6 230.00 - SUMMIT 230KV CKT 1'	319	319	0.07803	101.6282	'GEN645001 1-FORT CALHOUN 1'
13G	03ALL	'FROM->TO'	'SMOKYHL6 230.00 - SUMMIT 230KV CKT 1'	319	319	0.09991	101.6282	'GEN645001 1-FORT CALHOUN 1'
13G	03ALL	'FROM->TO'	'SMOKYHL6 230.00 - SUMMIT 230KV CKT 1'	319	319	0.11509	101.6282	'GEN645001 1-FORT CALHOUN 1'
13G	03ALL	'FROM->TO'	'SMOKYHL6 230.00 - SUMMIT 230KV CKT 1'	319	319	0.11509	101.6282	'GEN645001 1-FORT CALHOUN 1'
13G	03ALL	'FROM->TO'	'SMOKYHL6 230.00 - SUMMIT 230KV CKT 1'	319	319	0.62637	101.6282	'GEN645001 1-FORT CALHOUN 1'
13G	03ALL	'FROM->TO'	'SMOKYHL6 230.00 - SUMMIT 230KV CKT 1'	319	319	0.09991	101.6282	'GEN645001 1-FORT CALHOUN 1'
13G	03ALL	'FROM->TO'	'SMOKYHL6 230.00 - SUMMIT 230KV CKT 1'	319	319	0.1274	101.6282	'GEN645001 1-FORT CALHOUN 1'
13G	03ALL	'FROM->TO'	'SMOKYHL6 230.00 - SUMMIT 230KV CKT 1'	319	319	0.10261	101.6282	'GEN645001 1-FORT CALHOUN 1'
13G	03ALL	'TO->FROM'	'CLEARWATER - MILAN TAP 138KV CKT 1'	110	110	0.03559	119.7819	'GEN645001 1-FORT CALHOUN 1'
13G	03ALL	'TO->FROM'	'CLEARWATER - MILAN TAP 138KV CKT 1'	110	110	0.06218	119.7819	'GEN645001 1-FORT CALHOUN 1'
13G	03ALL	'TO->FROM'	'CLEARWATER - MILAN TAP 138KV CKT 1'	110	110	0.10851	119.7819	'GEN645001 1-FORT CALHOUN 1'
13G	03ALL	'TO->FROM'	'CLEARWATER - MILAN TAP 138KV CKT 1'	110	110	0.04844	119.7819	'GEN645001 1-FORT CALHOUN 1'
13G	03ALL	'TO->FROM'	'CLEARWATER - MILAN TAP 138KV CKT 1'	110	110	0.04844	119.7819	'GEN645001 1-FORT CALHOUN 1'
13G	03ALL	'TO->FROM'	'CLEARWATER - MILAN TAP 138KV CKT 1'	110	110	0.2104	119.7819	'GEN645001 1-FORT CALHOUN 1'
13G	03ALL	'TO->FROM'	'CLEARWATER - MILAN TAP 138KV CKT 1'	110	110	0.03753	119.7819	'GEN645001 1-FORT CALHOUN 1'
13G	03ALL	'TO->FROM'	'CLEARWATER - MILAN TAP 138KV CKT 1'	110	110	0.0394	119.7819	'GEN645001 1-FORT CALHOUN 1'
13G	03ALL	'TO->FROM'	'CLEARWATER - MILAN TAP 138KV CKT 1'	110	110	0.0394	119.7819	'GEN645001 1-FORT CALHOUN 1'
13G	03ALL	'TO->FROM'	'CLEARWATER - MILAN TAP 138KV CKT 1'	110	110	0.52726	119.7819	'GEN645001 1-FORT CALHOUN 1'
13G	03ALL	'TO->FROM'	'CLEARWATER - MILAN TAP 138KV CKT 1'	110	110	0.03696	119.7819	'GEN645001 1-FORT CALHOUN 1'
13G	03ALL	'TO->FROM'	'CLEARWATER - MILAN TAP 138KV CKT 1'	110	110	0.04265	119.7819	'GEN645001 1-FORT CALHOUN 1'
13G	03ALL	'TO->FROM'	'CLEARWATER - MILAN TAP 138KV CKT 1'	110	110	0.03608	119.7819	'GEN645001 1-FORT CALHOUN 1'
13G	03ALL	'FROM->TO'	'HARPER - MILAN TAP 138KV CKT 1'	95.6	95.6	0.03559	145.179	'GEN645001 1-FORT CALHOUN 1'
13G	03ALL	'FROM->TO'	'HARPER - MILAN TAP 138KV CKT 1'	95.6	95.6	0.06218	145.179	'GEN645001 1-FORT CALHOUN 1'
13G	03ALL	'FROM->TO'	'HARPER - MILAN TAP 138KV CKT 1'	95.6	95.6	0.10851	145.179	'GEN645001 1-FORT CALHOUN 1'
13G	03ALL	'FROM->TO'	'HARPER - MILAN TAP 138KV CKT 1'	95.6	95.6	0.04844	145.179	'GEN645001 1-FORT CALHOUN 1'
13G	03ALL	'FROM->TO'	'HARPER - MILAN TAP 138KV CKT 1'	95.6	95.6	0.04844	145.179	'GEN645001 1-FORT CALHOUN 1'
13G	03ALL	'FROM->TO'	'HARPER - MILAN TAP 138KV CKT 1'	95.6	95.6	0.2104	145.179	'GEN645001 1-FORT CALHOUN 1'
13G	03ALL	'FROM->TO'	'HARPER - MILAN TAP 138KV CKT 1'	95.6	95.6	0.03753	145.179	'GEN645001 1-FORT CALHOUN 1'
13G	03ALL	'FROM->TO'	'HARPER - MILAN TAP 138KV CKT 1'	95.6	95.6	0.0394	145.179	'GEN645001 1-FORT CALHOUN 1'
13G	03ALL	'FROM->TO'	'HARPER - MILAN TAP 138KV CKT 1'	95.6	95.6	0.0394	145.179	'GEN645001 1-FORT CALHOUN 1'
13G	03ALL	'FROM->TO'	'HARPER - MILAN TAP 138KV CKT 1'	95.6	95.6	0.52726	145.179	'GEN645001 1-FORT CALHOUN 1'
13G	03ALL	'FROM->TO'	'HARPER - MILAN TAP 138KV CKT 1'	95.6	95.6	0.03696	145.179	'GEN645001 1-FORT CALHOUN 1'
13G	03ALL	'FROM->TO'	'HARPER - MILAN TAP 138KV CKT 1'	95.6	95.6	0.04265	145.179	'GEN645001 1-FORT CALHOUN 1'
13G	03ALL	'FROM->TO'	'HARPER - MILAN TAP 138KV CKT 1'	95.6	95.6	0.03608	145.179	'GEN645001 1-FORT CALHOUN 1'
13G	03ALL	'FROM->TO'	'SMOKYHL6 230.00 - SUMMIT 230KV CKT 1'	319	319	0.18549	101.194	'GEN645011 1-NEBRASKA CITY 1'
13G	03ALL	'FROM->TO'	'SMOKYHL6 230.00 - SUMMIT 230KV CKT 1'	319	319	0.08979	101.194	'GEN645011 1-NEBRASKA CITY 1'
13G	03ALL	'FROM->TO'	'SMOKYHL6 230.00 - SUMMIT 230KV CKT 1'	319	319	0.10326	101.194	'GEN645011 1-NEBRASKA CITY 1'
13G	03ALL	'FROM->TO'	'SMOKYHL6 230.00 - SUMMIT 230KV CKT 1'	319	319	0.12225	101.194	'GEN645011 1-NEBRASKA CITY 1'
13G	03ALL	'FROM->TO'	'SMOKYHL6 230.00 - SUMMIT 230KV CKT 1'	319	319	0.12225	101.194	'GEN645011 1-NEBRASKA CITY 1'
13G	03ALL	'FROM->TO'	'SMOKYHL6 230.00 - SUMMIT 230KV CKT 1'	319	319	0.07803	101.194	'GEN645011 1-NEBRASKA CITY 1'
13G	03ALL	'FROM->TO'	'SMOKYHL6 230.00 - SUMMIT 230KV CKT 1'	319	319	0.09991	101.194	'GEN645011 1-NEBRASKA CITY 1'
13G	03ALL	'FROM->TO'	'SMOKYHL6 230.00 - SUMMIT 230KV CKT 1'	319	319	0.11509	101.194	'GEN645011 1-NEBRASKA CITY 1'
13G	03ALL	'FROM->TO'	'SMOKYHL6 230.00 - SUMMIT 230KV CKT 1'	319	319	0.11509	101.194	'GEN645011 1-NEBRASKA CITY 1'
13G	03ALL	'FROM->TO'	'SMOKYHL6 230.00 - SUMMIT 230KV CKT 1'	319	319	0.62637	101.194	'GEN645011 1-NEBRASKA CITY 1'
13G	03ALL	'FROM->TO'	'SMOKYHL6 230.00 - SUMMIT 230KV CKT 1'	319	319	0.09991	101.194	'GEN645011 1-NEBRASKA CITY 1'
13G	03ALL	'FROM->TO'	'SMOKYHL6 230.00 - SUMMIT 230KV CKT 1'	319	319	0.1274	101.194	'GEN645011 1-NEBRASKA CITY 1'
13G	03ALL	'FROM->TO'	'SMOKYHL6 230.00 - SUMMIT 230KV CKT 1'	319	319	0.10261	101.194	'GEN645011 1-NEBRASKA CITY 1'
13G	03ALL	'TO->FROM'	'CLEARWATER - MILAN TAP 138KV CKT 1'	110	110	0.03559	119.2365	'GEN645011 1-NEBRASKA CITY 1'
13G	03ALL	'TO->FROM'	'CLEARWATER - MILAN TAP 138KV CKT 1'	110	110	0.06218	119.2365	'GEN645011 1-NEBRASKA CITY 1'

SEASON	GROUP	DIRECTION	MONITORED ELEMENT	RATE A (MVA)	RATE B (MVA)	TDF	TC%LOADING (%MVA)	CONTINGENCY NAME
13G	03ALL	'TO->FROM'	'CLEARWATER - MILAN TAP 138KV CKT 1'	110	110	0.10851	119.2365	'GEN645011 1-NEBRASKA CITY 1'
13G	03ALL	'TO->FROM'	'CLEARWATER - MILAN TAP 138KV CKT 1'	110	110	0.04844	119.2365	'GEN645011 1-NEBRASKA CITY 1'
13G	03ALL	'TO->FROM'	'CLEARWATER - MILAN TAP 138KV CKT 1'	110	110	0.04844	119.2365	'GEN645011 1-NEBRASKA CITY 1'
13G	03ALL	'TO->FROM'	'CLEARWATER - MILAN TAP 138KV CKT 1'	110	110	0.2104	119.2365	'GEN645011 1-NEBRASKA CITY 1'
13G	03ALL	'TO->FROM'	'CLEARWATER - MILAN TAP 138KV CKT 1'	110	110	0.03753	119.2365	'GEN645011 1-NEBRASKA CITY 1'
13G	03ALL	'TO->FROM'	'CLEARWATER - MILAN TAP 138KV CKT 1'	110	110	0.0394	119.2365	'GEN645011 1-NEBRASKA CITY 1'
13G	03ALL	'TO->FROM'	'CLEARWATER - MILAN TAP 138KV CKT 1'	110	110	0.0394	119.2365	'GEN645011 1-NEBRASKA CITY 1'
13G	03ALL	'TO->FROM'	'CLEARWATER - MILAN TAP 138KV CKT 1'	110	110	0.52726	119.2365	'GEN645011 1-NEBRASKA CITY 1'
13G	03ALL	'TO->FROM'	'CLEARWATER - MILAN TAP 138KV CKT 1'	110	110	0.03696	119.2365	'GEN645011 1-NEBRASKA CITY 1'
13G	03ALL	'TO->FROM'	'CLEARWATER - MILAN TAP 138KV CKT 1'	110	110	0.04265	119.2365	'GEN645011 1-NEBRASKA CITY 1'
13G	03ALL	'TO->FROM'	'CLEARWATER - MILAN TAP 138KV CKT 1'	110	110	0.03608	119.2365	'GEN645011 1-NEBRASKA CITY 1'
13G	03ALL	'FROM->TO'	'HARPER - MILAN TAP 138KV CKT 1'	95.6	95.6	0.03559	144.554	'GEN645011 1-NEBRASKA CITY 1'
13G	03ALL	'FROM->TO'	'HARPER - MILAN TAP 138KV CKT 1'	95.6	95.6	0.06218	144.554	'GEN645011 1-NEBRASKA CITY 1'
13G	03ALL	'FROM->TO'	'HARPER - MILAN TAP 138KV CKT 1'	95.6	95.6	0.10851	144.554	'GEN645011 1-NEBRASKA CITY 1'
13G	03ALL	'FROM->TO'	'HARPER - MILAN TAP 138KV CKT 1'	95.6	95.6	0.04844	144.554	'GEN645011 1-NEBRASKA CITY 1'
13G	03ALL	'FROM->TO'	'HARPER - MILAN TAP 138KV CKT 1'	95.6	95.6	0.04844	144.554	'GEN645011 1-NEBRASKA CITY 1'
13G	03ALL	'FROM->TO'	'HARPER - MILAN TAP 138KV CKT 1'	95.6	95.6	0.2104	144.554	'GEN645011 1-NEBRASKA CITY 1'
13G	03ALL	'FROM->TO'	'HARPER - MILAN TAP 138KV CKT 1'	95.6	95.6	0.03753	144.554	'GEN645011 1-NEBRASKA CITY 1'
13G	03ALL	'FROM->TO'	'HARPER - MILAN TAP 138KV CKT 1'	95.6	95.6	0.0394	144.554	'GEN645011 1-NEBRASKA CITY 1'
13G	03ALL	'FROM->TO'	'HARPER - MILAN TAP 138KV CKT 1'	95.6	95.6	0.0394	144.554	'GEN645011 1-NEBRASKA CITY 1'
13G	03ALL	'FROM->TO'	'HARPER - MILAN TAP 138KV CKT 1'	95.6	95.6	0.52726	144.554	'GEN645011 1-NEBRASKA CITY 1'
13G	03ALL	'FROM->TO'	'HARPER - MILAN TAP 138KV CKT 1'	95.6	95.6	0.03696	144.554	'GEN645011 1-NEBRASKA CITY 1'
13G	03ALL	'FROM->TO'	'HARPER - MILAN TAP 138KV CKT 1'	95.6	95.6	0.04265	144.554	'GEN645011 1-NEBRASKA CITY 1'
13G	03ALL	'FROM->TO'	'HARPER - MILAN TAP 138KV CKT 1'	95.6	95.6	0.03608	144.554	'GEN645011 1-NEBRASKA CITY 1'
13G	03ALL	'FROM->TO'	'SMOKYHL6 230.00 - SUMMIT 230KV CKT 1'	319	319	0.18549	100.8001	'GEN645012 2-NEBRASKA CITY 2'
13G	03ALL	'FROM->TO'	'SMOKYHL6 230.00 - SUMMIT 230KV CKT 1'	319	319	0.08979	100.8001	'GEN645012 2-NEBRASKA CITY 2'
13G	03ALL	'FROM->TO'	'SMOKYHL6 230.00 - SUMMIT 230KV CKT 1'	319	319	0.10326	100.8001	'GEN645012 2-NEBRASKA CITY 2'
13G	03ALL	'FROM->TO'	'SMOKYHL6 230.00 - SUMMIT 230KV CKT 1'	319	319	0.12225	100.8001	'GEN645012 2-NEBRASKA CITY 2'
13G	03ALL	'FROM->TO'	'SMOKYHL6 230.00 - SUMMIT 230KV CKT 1'	319	319	0.12225	100.8001	'GEN645012 2-NEBRASKA CITY 2'
13G	03ALL	'FROM->TO'	'SMOKYHL6 230.00 - SUMMIT 230KV CKT 1'	319	319	0.07803	100.8001	'GEN645012 2-NEBRASKA CITY 2'
13G	03ALL	'FROM->TO'	'SMOKYHL6 230.00 - SUMMIT 230KV CKT 1'	319	319	0.09991	100.8001	'GEN645012 2-NEBRASKA CITY 2'
13G	03ALL	'FROM->TO'	'SMOKYHL6 230.00 - SUMMIT 230KV CKT 1'	319	319	0.11509	100.8001	'GEN645012 2-NEBRASKA CITY 2'
13G	03ALL	'FROM->TO'	'SMOKYHL6 230.00 - SUMMIT 230KV CKT 1'	319	319	0.11509	100.8001	'GEN645012 2-NEBRASKA CITY 2'
13G	03ALL	'FROM->TO'	'SMOKYHL6 230.00 - SUMMIT 230KV CKT 1'	319	319	0.62637	100.8001	'GEN645012 2-NEBRASKA CITY 2'
13G	03ALL	'FROM->TO'	'SMOKYHL6 230.00 - SUMMIT 230KV CKT 1'	319	319	0.09991	100.8001	'GEN645012 2-NEBRASKA CITY 2'
13G	03ALL	'FROM->TO'	'SMOKYHL6 230.00 - SUMMIT 230KV CKT 1'	319	319	0.1274	100.8001	'GEN645012 2-NEBRASKA CITY 2'
13G	03ALL	'FROM->TO'	'SMOKYHL6 230.00 - SUMMIT 230KV CKT 1'	319	319	0.10261	100.8001	'GEN645012 2-NEBRASKA CITY 2'
13G	03ALL	'TO->FROM'	'CLEARWATER - MILAN TAP 138KV CKT 1'	110	110	0.03559	118.8827	'GEN645012 2-NEBRASKA CITY 2'
13G	03ALL	'TO->FROM'	'CLEARWATER - MILAN TAP 138KV CKT 1'	110	110	0.06218	118.8827	'GEN645012 2-NEBRASKA CITY 2'
13G	03ALL	'TO->FROM'	'CLEARWATER - MILAN TAP 138KV CKT 1'	110	110	0.10851	118.8827	'GEN645012 2-NEBRASKA CITY 2'
13G	03ALL	'TO->FROM'	'CLEARWATER - MILAN TAP 138KV CKT 1'	110	110	0.04844	118.8827	'GEN645012 2-NEBRASKA CITY 2'
13G	03ALL	'TO->FROM'	'CLEARWATER - MILAN TAP 138KV CKT 1'	110	110	0.04844	118.8827	'GEN645012 2-NEBRASKA CITY 2'
13G	03ALL	'TO->FROM'	'CLEARWATER - MILAN TAP 138KV CKT 1'	110	110	0.2104	118.8827	'GEN645012 2-NEBRASKA CITY 2'
13G	03ALL	'TO->FROM'	'CLEARWATER - MILAN TAP 138KV CKT 1'	110	110	0.03753	118.8827	'GEN645012 2-NEBRASKA CITY 2'
13G	03ALL	'TO->FROM'	'CLEARWATER - MILAN TAP 138KV CKT 1'	110	110	0.0394	118.8827	'GEN645012 2-NEBRASKA CITY 2'
13G	03ALL	'TO->FROM'	'CLEARWATER - MILAN TAP 138KV CKT 1'	110	110	0.0394	118.8827	'GEN645012 2-NEBRASKA CITY 2'
13G	03ALL	'TO->FROM'	'CLEARWATER - MILAN TAP 138KV CKT 1'	110	110	0.52726	118.8827	'GEN645012 2-NEBRASKA CITY 2'
13G	03ALL	'TO->FROM'	'CLEARWATER - MILAN TAP 138KV CKT 1'	110	110	0.03696	118.8827	'GEN645012 2-NEBRASKA CITY 2'
13G	03ALL	'TO->FROM'	'CLEARWATER - MILAN TAP 138KV CKT 1'	110	110	0.04265	118.8827	'GEN645012 2-NEBRASKA CITY 2'
13G	03ALL	'TO->FROM'	'CLEARWATER - MILAN TAP 138KV CKT 1'	110	110	0.03608	118.8827	'GEN645012 2-NEBRASKA CITY 2'
13G	03ALL	'FROM->TO'	'HARPER - MILAN TAP 138KV CKT 1'	95.6	95.6	0.03559	144.149	'GEN645012 2-NEBRASKA CITY 2'
13G	03ALL	'FROM->TO'	'HARPER - MILAN TAP 138KV CKT 1'	95.6	95.6	0.06218	144.149	'GEN645012 2-NEBRASKA CITY 2'
13G	03ALL	'FROM->TO'	'HARPER - MILAN TAP 138KV CKT 1'	95.6	95.6	0.10851	144.149	'GEN645012 2-NEBRASKA CITY 2'
13G	03ALL	'FROM->TO'	'HARPER - MILAN TAP 138KV CKT 1'	95.6	95.6	0.04844	144.149	'GEN645012 2-NEBRASKA CITY 2'
13G	03ALL	'FROM->TO'	'HARPER - MILAN TAP 138KV CKT 1'	95.6	95.6	0.04844	144.149	'GEN645012 2-NEBRASKA CITY 2'
13G	03ALL	'FROM->TO'	'HARPER - MILAN TAP 138KV CKT 1'	95.6	95.6	0.2104	144.149	'GEN645012 2-NEBRASKA CITY 2'
13G	03ALL	'FROM->TO'	'HARPER - MILAN TAP 138KV CKT 1'	95.6	95.6	0.03753	144.149	'GEN645012 2-NEBRASKA CITY 2'
13G	03ALL	'FROM->TO'	'HARPER - MILAN TAP 138KV CKT 1'	95.6	95.6	0.0394	144.149	'GEN645012 2-NEBRASKA CITY 2'
13G	03ALL	'FROM->TO'	'HARPER - MILAN TAP 138KV CKT 1'	95.6	95.6	0.0394	144.149	'GEN645012 2-NEBRASKA CITY 2'
13G	03ALL	'FROM->TO'	'HARPER - MILAN TAP 138KV CKT 1'	95.6	95.6	0.52726	144.149	'GEN645012 2-NEBRASKA CITY 2'
13G	03ALL	'FROM->TO'	'HARPER - MILAN TAP 138KV CKT 1'	95.6	95.6	0.03696	144.149	'GEN645012 2-NEBRASKA CITY 2'
13G	03ALL	'FROM->TO'	'HARPER - MILAN TAP 138KV CKT 1'	95.6	95.6	0.04265	144.149	'GEN645012 2-NEBRASKA CITY 2'
13G	03ALL	'FROM->TO'	'HARPER - MILAN TAP 138KV CKT 1'	95.6	95.6	0.03608	144.149	'GEN645012 2-NEBRASKA CITY 2'
13G	03ALL	'FROM->TO'	'SMOKYHL6 230.00 - SUMMIT 230KV CKT 1'	319	319	0.18549	104.193	'GEN652556 2-OAHE'

SEASON	GROUP	DIRECTION	MONITORED ELEMENT	RATE A (MVA)	RATE B (MVA)	TDF	TC%LOADING (%MVA)	CONTINGENCY NAME
13G	03ALL	'FROM->TO'	'SMOKYHL6 230.00 - SUMMIT 230KV CKT 1'	319	319	0.08979	104.193	'GEN652556 2-OAHE'
13G	03ALL	'FROM->TO'	'SMOKYHL6 230.00 - SUMMIT 230KV CKT 1'	319	319	0.10326	104.193	'GEN652556 2-OAHE'
13G	03ALL	'FROM->TO'	'SMOKYHL6 230.00 - SUMMIT 230KV CKT 1'	319	319	0.12225	104.193	'GEN652556 2-OAHE'
13G	03ALL	'FROM->TO'	'SMOKYHL6 230.00 - SUMMIT 230KV CKT 1'	319	319	0.12225	104.193	'GEN652556 2-OAHE'
13G	03ALL	'FROM->TO'	'SMOKYHL6 230.00 - SUMMIT 230KV CKT 1'	319	319	0.07803	104.193	'GEN652556 2-OAHE'
13G	03ALL	'FROM->TO'	'SMOKYHL6 230.00 - SUMMIT 230KV CKT 1'	319	319	0.09991	104.193	'GEN652556 2-OAHE'
13G	03ALL	'FROM->TO'	'SMOKYHL6 230.00 - SUMMIT 230KV CKT 1'	319	319	0.11509	104.193	'GEN652556 2-OAHE'
13G	03ALL	'FROM->TO'	'SMOKYHL6 230.00 - SUMMIT 230KV CKT 1'	319	319	0.11509	104.193	'GEN652556 2-OAHE'
13G	03ALL	'FROM->TO'	'SMOKYHL6 230.00 - SUMMIT 230KV CKT 1'	319	319	0.62637	104.193	'GEN652556 2-OAHE'
13G	03ALL	'FROM->TO'	'SMOKYHL6 230.00 - SUMMIT 230KV CKT 1'	319	319	0.09991	104.193	'GEN652556 2-OAHE'
13G	03ALL	'FROM->TO'	'SMOKYHL6 230.00 - SUMMIT 230KV CKT 1'	319	319	0.1274	104.193	'GEN652556 2-OAHE'
13G	03ALL	'FROM->TO'	'SMOKYHL6 230.00 - SUMMIT 230KV CKT 1'	319	319	0.10261	104.193	'GEN652556 2-OAHE'
13G	03ALL	'FROM->TO'	'SMOKYHL6 230.00 - SUMMIT 230KV CKT 1'	319	319	0.18549	101.9857	'GEN659111 2-LELAND OLDS UNIT2'
13G	03ALL	'FROM->TO'	'SMOKYHL6 230.00 - SUMMIT 230KV CKT 1'	319	319	0.08979	101.9857	'GEN659111 2-LELAND OLDS UNIT2'
13G	03ALL	'FROM->TO'	'SMOKYHL6 230.00 - SUMMIT 230KV CKT 1'	319	319	0.10326	101.9857	'GEN659111 2-LELAND OLDS UNIT2'
13G	03ALL	'FROM->TO'	'SMOKYHL6 230.00 - SUMMIT 230KV CKT 1'	319	319	0.12225	101.9857	'GEN659111 2-LELAND OLDS UNIT2'
13G	03ALL	'FROM->TO'	'SMOKYHL6 230.00 - SUMMIT 230KV CKT 1'	319	319	0.12225	101.9857	'GEN659111 2-LELAND OLDS UNIT2'
13G	03ALL	'FROM->TO'	'SMOKYHL6 230.00 - SUMMIT 230KV CKT 1'	319	319	0.07803	101.9857	'GEN659111 2-LELAND OLDS UNIT2'
13G	03ALL	'FROM->TO'	'SMOKYHL6 230.00 - SUMMIT 230KV CKT 1'	319	319	0.09991	101.9857	'GEN659111 2-LELAND OLDS UNIT2'
13G	03ALL	'FROM->TO'	'SMOKYHL6 230.00 - SUMMIT 230KV CKT 1'	319	319	0.11509	101.9857	'GEN659111 2-LELAND OLDS UNIT2'
13G	03ALL	'FROM->TO'	'SMOKYHL6 230.00 - SUMMIT 230KV CKT 1'	319	319	0.11509	101.9857	'GEN659111 2-LELAND OLDS UNIT2'
13G	03ALL	'FROM->TO'	'SMOKYHL6 230.00 - SUMMIT 230KV CKT 1'	319	319	0.62637	101.9857	'GEN659111 2-LELAND OLDS UNIT2'
13G	03ALL	'FROM->TO'	'SMOKYHL6 230.00 - SUMMIT 230KV CKT 1'	319	319	0.09991	101.9857	'GEN659111 2-LELAND OLDS UNIT2'
13G	03ALL	'FROM->TO'	'SMOKYHL6 230.00 - SUMMIT 230KV CKT 1'	319	319	0.1274	101.9857	'GEN659111 2-LELAND OLDS UNIT2'
13G	03ALL	'FROM->TO'	'SMOKYHL6 230.00 - SUMMIT 230KV CKT 1'	319	319	0.10261	101.9857	'GEN659111 2-LELAND OLDS UNIT2'
13G	03ALL	'FROM->TO'	'SMOKYHL6 230.00 - SUMMIT 230KV CKT 1'	319	319	0.18709	109.5863	'GREENSBURG - SSTARTP3 115.00 115KV CKT 1
13G	03ALL	'FROM->TO'	'SMOKYHL6 230.00 - SUMMIT 230KV CKT 1'	319	319	0.08944	109.5863	'GREENSBURG - SSTARTP3 115.00 115KV CKT 1
13G	03ALL	'FROM->TO'	'SMOKYHL6 230.00 - SUMMIT 230KV CKT 1'	319	319	0.12342	109.5863	'GREENSBURG - SSTARTP3 115.00 115KV CKT 1
13G	03ALL	'FROM->TO'	'SMOKYHL6 230.00 - SUMMIT 230KV CKT 1'	319	319	0.12733	109.5863	'GREENSBURG - SSTARTP3 115.00 115KV CKT 1
13G	03ALL	'FROM->TO'	'SMOKYHL6 230.00 - SUMMIT 230KV CKT 1'	319	319	0.12733	109.5863	'GREENSBURG - SSTARTP3 115.00 115KV CKT 1
13G	03ALL	'FROM->TO'	'SMOKYHL6 230.00 - SUMMIT 230KV CKT 1'	319	319	0.12337	109.5863	'GREENSBURG - SSTARTP3 115.00 115KV CKT 1
13G	03ALL	'FROM->TO'	'SMOKYHL6 230.00 - SUMMIT 230KV CKT 1'	319	319	0.1033	109.5863	'GREENSBURG - SSTARTP3 115.00 115KV CKT 1
13G	03ALL	'FROM->TO'	'SMOKYHL6 230.00 - SUMMIT 230KV CKT 1'	319	319	0.11896	109.5863	'GREENSBURG - SSTARTP3 115.00 115KV CKT 1
13G	03ALL	'FROM->TO'	'SMOKYHL6 230.00 - SUMMIT 230KV CKT 1'	319	319	0.11896	109.5863	'GREENSBURG - SSTARTP3 115.00 115KV CKT 1
13G	03ALL	'FROM->TO'	'SMOKYHL6 230.00 - SUMMIT 230KV CKT 1'	319	319	0.62668	109.5863	'GREENSBURG - SSTARTP3 115.00 115KV CKT 1
13G	03ALL	'FROM->TO'	'SMOKYHL6 230.00 - SUMMIT 230KV CKT 1'	319	319	0.10331	109.5863	'GREENSBURG - SSTARTP3 115.00 115KV CKT 1
13G	03ALL	'FROM->TO'	'SMOKYHL6 230.00 - SUMMIT 230KV CKT 1'	319	319	0.1316	109.5863	'GREENSBURG - SSTARTP3 115.00 115KV CKT 1
13G	03ALL	'FROM->TO'	'SMOKYHL6 230.00 - SUMMIT 230KV CKT 1'	319	319	0.10616	109.5863	'GREENSBURG - SSTARTP3 115.00 115KV CKT 1
13G	03ALL	'FROM->TO'	'SEWARD - ST JOHN 115KV CKT 1'	80.3	80.3	0.05397	134.4108	'GREENSBURG - SSTARTP3 115.00 115KV CKT 1
13G	03ALL	'FROM->TO'	'SEWARD - ST JOHN 115KV CKT 1'	80.3	80.3	0.14296	134.4108	'GREENSBURG - SSTARTP3 115.00 115KV CKT 1
13G	03ALL	'FROM->TO'	'SEWARD - ST JOHN 115KV CKT 1'	80.3	80.3	0.05135	134.4108	'GREENSBURG - SSTARTP3 115.00 115KV CKT 1
13G	03ALL	'FROM->TO'	'SEWARD - ST JOHN 115KV CKT 1'	80.3	80.3	0.05321	134.4108	'GREENSBURG - SSTARTP3 115.00 115KV CKT 1
13G	03ALL	'FROM->TO'	'SEWARD - ST JOHN 115KV CKT 1'	80.3	80.3	0.05321	134.4108	'GREENSBURG - SSTARTP3 115.00 115KV CKT 1
13G	03ALL	'FROM->TO'	'SEWARD - ST JOHN 115KV CKT 1'	80.3	80.3	0.05132	134.4108	'GREENSBURG - SSTARTP3 115.00 115KV CKT 1
13G	03ALL	'FROM->TO'	'SEWARD - ST JOHN 115KV CKT 1'	80.3	80.3	0.04667	134.4108	'GREENSBURG - SSTARTP3 115.00 115KV CKT 1
13G	03ALL	'FROM->TO'	'SEWARD - ST JOHN 115KV CKT 1'	80.3	80.3	0.04522	134.4108	'GREENSBURG - SSTARTP3 115.00 115KV CKT 1
13G	03ALL	'FROM->TO'	'SEWARD - ST JOHN 115KV CKT 1'	80.3	80.3	0.04522	134.4108	'GREENSBURG - SSTARTP3 115.00 115KV CKT 1
13G	03ALL	'FROM->TO'	'SEWARD - ST JOHN 115KV CKT 1'	80.3	80.3	0.04525	134.4108	'GREENSBURG - SSTARTP3 115.00 115KV CKT 1
13G	03ALL	'FROM->TO'	'SEWARD - ST JOHN 115KV CKT 1'	80.3	80.3	0.04869	134.4108	'GREENSBURG - SSTARTP3 115.00 115KV CKT 1
13G	03ALL	'FROM->TO'	'SEWARD - ST JOHN 115KV CKT 1'	80.3	80.3	0.04169	134.4108	'GREENSBURG - SSTARTP3 115.00 115KV CKT 1
13G	03ALL	'FROM->TO'	'NORTH JUDSON LARGE SUB - SPEARVILLE 115KV CKT 1'	165.1	177.7	0.79233	127.9955	'GREENSBURG - SSTARTP3 115.00 115KV CKT 1
13G	03ALL	'FROM->TO'	'NORTH JUDSON LARGE SUB - SPEARVILLE 115KV CKT 1'	165.1	177.7	0.78977	127.9955	'GREENSBURG - SSTARTP3 115.00 115KV CKT 1
13G	03ALL	'FROM->TO'	'SPEARVILLE (SPEARVL6) 230/115/13.8KV TRANSFORMER CKT 1	205	205	0.79233	104.5834	'GREENSBURG - SSTARTP3 115.00 115KV CKT 1
13G	03ALL	'FROM->TO'	'SPEARVILLE (SPEARVL6) 230/115/13.8KV TRANSFORMER CKT 1	205	205	0.78977	104.5834	'GREENSBURG - SSTARTP3 115.00 115KV CKT 1
13G	03ALL	'FROM->TO'	'SPEARVILLE (SPEARVL6) 230/115/13.8KV TRANSFORMER CKT 1	205	205	0.79233	106.3865	'GREENSBURG - SSTARTP3 115.00 115KV CKT 1
13G	03ALL	'FROM->TO'	'SPEARVILLE (SPEARVL6) 230/115/13.8KV TRANSFORMER CKT 1	205	205	0.78977	106.3865	'GREENSBURG - SSTARTP3 115.00 115KV CKT 1
13G	03ALL	'FROM->TO'	'SMOKYHL6 230.00 - SUMMIT 230KV CKT 1'	319	319	0.18611	107.1798	'NUNDRWD - WAYSIDE 230KV CKT 1'
13G	03ALL	'FROM->TO'	'SMOKYHL6 230.00 - SUMMIT 230KV CKT 1'	319	319	0.09044	107.1798	'NUNDRWD - WAYSIDE 230KV CKT 1'
13G	03ALL	'FROM->TO'	'SMOKYHL6 230.00 - SUMMIT 230KV CKT 1'	319	319	0.10396	107.1798	'NUNDRWD - WAYSIDE 230KV CKT 1'
13G	03ALL	'FROM->TO'	'SMOKYHL6 230.00 - SUMMIT 230KV CKT 1'	319	319	0.12299	107.1798	'NUNDRWD - WAYSIDE 230KV CKT 1'
13G	03ALL	'FROM->TO'	'SMOKYHL6 230.00 - SUMMIT 230KV CKT 1'	319	319	0.12299	107.1798	'NUNDRWD - WAYSIDE 230KV CKT 1'
13G	03ALL	'FROM->TO'	'SMOKYHL6 230.00 - SUMMIT 230KV CKT 1'	319	319	0.0786	107.1798	'NUNDRWD - WAYSIDE 230KV CKT 1'
13G	03ALL	'FROM->TO'	'SMOKYHL6 230.00 - SUMMIT 230KV CKT 1'	319	319	0.10094	107.1798	'NUNDRWD - WAYSIDE 230KV CKT 1'
13G	03ALL	'FROM->TO'	'SMOKYHL6 230.00 - SUMMIT 230KV CKT 1'	319	319	0.11594	107.1798	'NUNDRWD - WAYSIDE 230KV CKT 1'

SEASON	GROUP	DIRECTION	MONITORED ELEMENT	RATE A (MVA)	RATE B (MVA)	TDF	TC%LOADING (%MVA)	CONTINGENCY NAME
13G	03ALL	'FROM->TO'	'SMOKYHL6 230.00 - SUMMIT 230KV CKT 1'	319	319	0.11594	107.1798	'NUNDRWD - WAYSIDE 230KV CKT 1'
13G	03ALL	'FROM->TO'	'SMOKYHL6 230.00 - SUMMIT 230KV CKT 1'	319	319	0.62668	107.1798	'NUNDRWD - WAYSIDE 230KV CKT 1'
13G	03ALL	'FROM->TO'	'SMOKYHL6 230.00 - SUMMIT 230KV CKT 1'	319	319	0.10096	107.1798	'NUNDRWD - WAYSIDE 230KV CKT 1'
13G	03ALL	'FROM->TO'	'SMOKYHL6 230.00 - SUMMIT 230KV CKT 1'	319	319	0.12818	107.1798	'NUNDRWD - WAYSIDE 230KV CKT 1'
13G	03ALL	'FROM->TO'	'SMOKYHL6 230.00 - SUMMIT 230KV CKT 1'	319	319	0.10354	107.1798	'NUNDRWD - WAYSIDE 230KV CKT 1'
13G	03ALL	'TO->FROM'	'CLEARWATER - MILAN TAP 138KV CKT 1'	110	110	0.03559	113.5392	'GEN659118 1-LARAMIE RIVER UNIT1'
13G	03ALL	'TO->FROM'	'CLEARWATER - MILAN TAP 138KV CKT 1'	110	110	0.06218	113.5392	'GEN659118 1-LARAMIE RIVER UNIT1'
13G	03ALL	'TO->FROM'	'CLEARWATER - MILAN TAP 138KV CKT 1'	110	110	0.10851	113.5392	'GEN659118 1-LARAMIE RIVER UNIT1'
13G	03ALL	'TO->FROM'	'CLEARWATER - MILAN TAP 138KV CKT 1'	110	110	0.04844	113.5392	'GEN659118 1-LARAMIE RIVER UNIT1'
13G	03ALL	'TO->FROM'	'CLEARWATER - MILAN TAP 138KV CKT 1'	110	110	0.04844	113.5392	'GEN659118 1-LARAMIE RIVER UNIT1'
13G	03ALL	'TO->FROM'	'CLEARWATER - MILAN TAP 138KV CKT 1'	110	110	0.2104	113.5392	'GEN659118 1-LARAMIE RIVER UNIT1'
13G	03ALL	'TO->FROM'	'CLEARWATER - MILAN TAP 138KV CKT 1'	110	110	0.03753	113.5392	'GEN659118 1-LARAMIE RIVER UNIT1'
13G	03ALL	'TO->FROM'	'CLEARWATER - MILAN TAP 138KV CKT 1'	110	110	0.0394	113.5392	'GEN659118 1-LARAMIE RIVER UNIT1'
13G	03ALL	'TO->FROM'	'CLEARWATER - MILAN TAP 138KV CKT 1'	110	110	0.0394	113.5392	'GEN659118 1-LARAMIE RIVER UNIT1'
13G	03ALL	'TO->FROM'	'CLEARWATER - MILAN TAP 138KV CKT 1'	110	110	0.52726	113.5392	'GEN659118 1-LARAMIE RIVER UNIT1'
13G	03ALL	'TO->FROM'	'CLEARWATER - MILAN TAP 138KV CKT 1'	110	110	0.03696	113.5392	'GEN659118 1-LARAMIE RIVER UNIT1'
13G	03ALL	'TO->FROM'	'CLEARWATER - MILAN TAP 138KV CKT 1'	110	110	0.04265	113.5392	'GEN659118 1-LARAMIE RIVER UNIT1'
13G	03ALL	'TO->FROM'	'CLEARWATER - MILAN TAP 138KV CKT 1'	110	110	0.03608	113.5392	'GEN659118 1-LARAMIE RIVER UNIT1'
13G	03ALL	'TO->FROM'	'GREENSBURG - SSTARTP3 115.00 115KV CKT 1	120.7	129.5	0.17753	101.0718	'GEN659118 1-LARAMIE RIVER UNIT1'
13G	03ALL	'TO->FROM'	'GREENSBURG - SSTARTP3 115.00 115KV CKT 1	120.7	129.5	0.04472	101.0718	'GEN659118 1-LARAMIE RIVER UNIT1'
13G	03ALL	'TO->FROM'	'GREENSBURG - SSTARTP3 115.00 115KV CKT 1	120.7	129.5	0.04472	101.0718	'GEN659118 1-LARAMIE RIVER UNIT1'
13G	03ALL	'TO->FROM'	'GREENSBURG - SSTARTP3 115.00 115KV CKT 1	120.7	129.5	0.39904	101.0718	'GEN659118 1-LARAMIE RIVER UNIT1'
13G	03ALL	'TO->FROM'	'GREENSBURG - SSTARTP3 115.00 115KV CKT 1	120.7	129.5	0.0299	101.0718	'GEN659118 1-LARAMIE RIVER UNIT1'
13G	03ALL	'TO->FROM'	'GREENSBURG - SSTARTP3 115.00 115KV CKT 1	120.7	129.5	0.03411	101.0718	'GEN659118 1-LARAMIE RIVER UNIT1'
13G	03ALL	'TO->FROM'	'GREENSBURG - SSTARTP3 115.00 115KV CKT 1	120.7	129.5	0.03411	101.0718	'GEN659118 1-LARAMIE RIVER UNIT1'
13G	03ALL	'TO->FROM'	'GREENSBURG - SSTARTP3 115.00 115KV CKT 1	120.7	129.5	0.02996	101.0718	'GEN659118 1-LARAMIE RIVER UNIT1'
13G	03ALL	'TO->FROM'	'GREENSBURG - SSTARTP3 115.00 115KV CKT 1	120.7	129.5	0.03691	101.0718	'GEN659118 1-LARAMIE RIVER UNIT1'
13G	03ALL	'TO->FROM'	'GREENSBURG - SSTARTP3 115.00 115KV CKT 1	120.7	129.5	0.03126	101.0718	'GEN659118 1-LARAMIE RIVER UNIT1'
13G	03ALL	'FROM->TO'	'HARPER - MILAN TAP 138KV CKT 1'	95.6	95.6	0.03559	138.0477	'GEN659118 1-LARAMIE RIVER UNIT1'
13G	03ALL	'FROM->TO'	'HARPER - MILAN TAP 138KV CKT 1'	95.6	95.6	0.06218	138.0477	'GEN659118 1-LARAMIE RIVER UNIT1'
13G	03ALL	'FROM->TO'	'HARPER - MILAN TAP 138KV CKT 1'	95.6	95.6	0.10851	138.0477	'GEN659118 1-LARAMIE RIVER UNIT1'
13G	03ALL	'FROM->TO'	'HARPER - MILAN TAP 138KV CKT 1'	95.6	95.6	0.04844	138.0477	'GEN659118 1-LARAMIE RIVER UNIT1'
13G	03ALL	'FROM->TO'	'HARPER - MILAN TAP 138KV CKT 1'	95.6	95.6	0.04844	138.0477	'GEN659118 1-LARAMIE RIVER UNIT1'
13G	03ALL	'FROM->TO'	'HARPER - MILAN TAP 138KV CKT 1'	95.6	95.6	0.2104	138.0477	'GEN659118 1-LARAMIE RIVER UNIT1'
13G	03ALL	'FROM->TO'	'HARPER - MILAN TAP 138KV CKT 1'	95.6	95.6	0.03753	138.0477	'GEN659118 1-LARAMIE RIVER UNIT1'
13G	03ALL	'FROM->TO'	'HARPER - MILAN TAP 138KV CKT 1'	95.6	95.6	0.0394	138.0477	'GEN659118 1-LARAMIE RIVER UNIT1'
13G	03ALL	'FROM->TO'	'HARPER - MILAN TAP 138KV CKT 1'	95.6	95.6	0.0394	138.0477	'GEN659118 1-LARAMIE RIVER UNIT1'
13G	03ALL	'FROM->TO'	'HARPER - MILAN TAP 138KV CKT 1'	95.6	95.6	0.52726	138.0477	'GEN659118 1-LARAMIE RIVER UNIT1'
13G	03ALL	'FROM->TO'	'HARPER - MILAN TAP 138KV CKT 1'	95.6	95.6	0.03696	138.0477	'GEN659118 1-LARAMIE RIVER UNIT1'
13G	03ALL	'FROM->TO'	'HARPER - MILAN TAP 138KV CKT 1'	95.6	95.6	0.04265	138.0477	'GEN659118 1-LARAMIE RIVER UNIT1'
13G	03ALL	'FROM->TO'	'HARPER - MILAN TAP 138KV CKT 1'	95.6	95.6	0.03608	138.0477	'GEN659118 1-LARAMIE RIVER UNIT1'
13G	03ALL		'SMOKYHL6 230.00 - SUMMIT 230KV CKT 1'	319	319	0.18549	105.2293	'BASE CASE'
13G	03ALL		'SMOKYHL6 230.00 - SUMMIT 230KV CKT 1'	319	319	0.08979	105.2293	'BASE CASE'
13G	03ALL		'SMOKYHL6 230.00 - SUMMIT 230KV CKT 1'	319	319	0.10326	105.2293	'BASE CASE'
13G	03ALL		'SMOKYHL6 230.00 - SUMMIT 230KV CKT 1'	319	319	0.12225	105.2293	'BASE CASE'
13G	03ALL		'SMOKYHL6 230.00 - SUMMIT 230KV CKT 1'	319	319	0.12225	105.2293	'BASE CASE'
13G	03ALL		'SMOKYHL6 230.00 - SUMMIT 230KV CKT 1'	319	319	0.07803	105.2293	'BASE CASE'
13G	03ALL		'SMOKYHL6 230.00 - SUMMIT 230KV CKT 1'	319	319	0.09991	105.2293	'BASE CASE'
13G	03ALL		'SMOKYHL6 230.00 - SUMMIT 230KV CKT 1'	319	319	0.11509	105.2293	'BASE CASE'
13G	03ALL		'SMOKYHL6 230.00 - SUMMIT 230KV CKT 1'	319	319	0.11509	105.2293	'BASE CASE'
13G	03ALL		'SMOKYHL6 230.00 - SUMMIT 230KV CKT 1'	319	319	0.62637	105.2293	'BASE CASE'
13G	03ALL		'SMOKYHL6 230.00 - SUMMIT 230KV CKT 1'	319	319	0.09991	105.2293	'BASE CASE'
13G	03ALL		'SMOKYHL6 230.00 - SUMMIT 230KV CKT 1'	319	319	0.1274	105.2293	'BASE CASE'
13G	03ALL		'SMOKYHL6 230.00 - SUMMIT 230KV CKT 1'	319	319	0.10261	105.2293	'BASE CASE'
13G	03ALL	'FROM->TO'	'SMOKYHL6 230.00 - SUMMIT 230KV CKT 1'	319	319	0.18539	104.2719	'AUBURN ROAD - JEFFREY ENERGY CENTER 230KV CKT 1
13G	03ALL	'FROM->TO'	'SMOKYHL6 230.00 - SUMMIT 230KV CKT 1'	319	319	0.08969	104.2719	'AUBURN ROAD - JEFFREY ENERGY CENTER 230KV CKT 1
13G	03ALL	'FROM->TO'	'SMOKYHL6 230.00 - SUMMIT 230KV CKT 1'	319	319	0.10319	104.2719	'AUBURN ROAD - JEFFREY ENERGY CENTER 230KV CKT 1
13G	03ALL	'FROM->TO'	'SMOKYHL6 230.00 - SUMMIT 230KV CKT 1'	319	319	0.12218	104.2719	'AUBURN ROAD - JEFFREY ENERGY CENTER 230KV CKT 1
13G	03ALL	'FROM->TO'	'SMOKYHL6 230.00 - SUMMIT 230KV CKT 1'	319	319	0.12218	104.2719	'AUBURN ROAD - JEFFREY ENERGY CENTER 230KV CKT 1
13G	03ALL	'FROM->TO'	'SMOKYHL6 230.00 - SUMMIT 230KV CKT 1'	319	319	0.07797	104.2719	'AUBURN ROAD - JEFFREY ENERGY CENTER 230KV CKT 1
13G	03ALL	'FROM->TO'	'SMOKYHL6 230.00 - SUMMIT 230KV CKT 1'	319	319	0.09986	104.2719	'AUBURN ROAD - JEFFREY ENERGY CENTER 230KV CKT 1
13G	03ALL	'FROM->TO'	'SMOKYHL6 230.00 - SUMMIT 230KV CKT 1'	319	319	0.11503	104.2719	'AUBURN ROAD - JEFFREY ENERGY CENTER 230KV CKT 1
13G	03ALL	'FROM->TO'	'SMOKYHL6 230.00 - SUMMIT 230KV CKT 1'	319	319	0.11503	104.2719	'AUBURN ROAD - JEFFREY ENERGY CENTER 230KV CKT 1
13G	03ALL	'FROM->TO'	'SMOKYHL6 230.00 - SUMMIT 230KV CKT 1'	319	319	0.62619	104.2719	'AUBURN ROAD - JEFFREY ENERGY CENTER 230KV CKT 1

SEASON	GROUP	DIRECTION	MONITORED ELEMENT	RATE A (MVA)	RATE B (MVA)	TDF	TC%LOADING (%MVA)	CONTINGENCY NAME
13G	03ALL	'FROM->TO'	'SMOKYHL6 230.00 - SUMMIT 230KV CKT 1'	319	319	0.09986	104.2719	'AUBURN ROAD - JEFFREY ENERGY CENTER 230KV CKT 1
13G	03ALL	'FROM->TO'	'SMOKYHL6 230.00 - SUMMIT 230KV CKT 1'	319	319	0.12734	104.2719	'AUBURN ROAD - JEFFREY ENERGY CENTER 230KV CKT 1
13G	03ALL	'FROM->TO'	'SMOKYHL6 230.00 - SUMMIT 230KV CKT 1'	319	319	0.10256	104.2719	'AUBURN ROAD - JEFFREY ENERGY CENTER 230KV CKT 1
13G	03ALL	'FROM->TO'	'SMOKYHL6 230.00 - SUMMIT 230KV CKT 1'	319	319	0.19134	107.9781	'CIRCLE - EAST MCPHERSON 230KV CKT 1'
13G	03ALL	'FROM->TO'	'SMOKYHL6 230.00 - SUMMIT 230KV CKT 1'	319	319	0.10055	107.9781	'CIRCLE - EAST MCPHERSON 230KV CKT 1'
13G	03ALL	'FROM->TO'	'SMOKYHL6 230.00 - SUMMIT 230KV CKT 1'	319	319	0.10973	107.9781	'CIRCLE - EAST MCPHERSON 230KV CKT 1'
13G	03ALL	'FROM->TO'	'SMOKYHL6 230.00 - SUMMIT 230KV CKT 1'	319	319	0.12889	107.9781	'CIRCLE - EAST MCPHERSON 230KV CKT 1'
13G	03ALL	'FROM->TO'	'SMOKYHL6 230.00 - SUMMIT 230KV CKT 1'	319	319	0.12889	107.9781	'CIRCLE - EAST MCPHERSON 230KV CKT 1'
13G	03ALL	'FROM->TO'	'SMOKYHL6 230.00 - SUMMIT 230KV CKT 1'	319	319	0.08481	107.9781	'CIRCLE - EAST MCPHERSON 230KV CKT 1'
13G	03ALL	'FROM->TO'	'SMOKYHL6 230.00 - SUMMIT 230KV CKT 1'	319	319	0.1048	107.9781	'CIRCLE - EAST MCPHERSON 230KV CKT 1'
13G	03ALL	'FROM->TO'	'SMOKYHL6 230.00 - SUMMIT 230KV CKT 1'	319	319	0.12025	107.9781	'CIRCLE - EAST MCPHERSON 230KV CKT 1'
13G	03ALL	'FROM->TO'	'SMOKYHL6 230.00 - SUMMIT 230KV CKT 1'	319	319	0.12025	107.9781	'CIRCLE - EAST MCPHERSON 230KV CKT 1'
13G	03ALL	'FROM->TO'	'SMOKYHL6 230.00 - SUMMIT 230KV CKT 1'	319	319	0.61839	107.9781	'CIRCLE - EAST MCPHERSON 230KV CKT 1'
13G	03ALL	'FROM->TO'	'SMOKYHL6 230.00 - SUMMIT 230KV CKT 1'	319	319	0.10464	107.9781	'CIRCLE - EAST MCPHERSON 230KV CKT 1'
13G	03ALL	'FROM->TO'	'SMOKYHL6 230.00 - SUMMIT 230KV CKT 1'	319	319	0.13309	107.9781	'CIRCLE - EAST MCPHERSON 230KV CKT 1'
13G	03ALL	'FROM->TO'	'SMOKYHL6 230.00 - SUMMIT 230KV CKT 1'	319	319	0.10726	107.9781	'CIRCLE - EAST MCPHERSON 230KV CKT 1'
13G	03ALL	'FROM->TO'	'SMOKYHL6 230.00 - SUMMIT 230KV CKT 1'	319	319	0.23305	124.3996	'CIRCLE - MULLERGREN 230KV CKT 1'
13G	03ALL	'FROM->TO'	'SMOKYHL6 230.00 - SUMMIT 230KV CKT 1'	319	319	0.1512	124.3996	'CIRCLE - MULLERGREN 230KV CKT 1'
13G	03ALL	'FROM->TO'	'SMOKYHL6 230.00 - SUMMIT 230KV CKT 1'	319	319	0.14272	124.3996	'CIRCLE - MULLERGREN 230KV CKT 1'
13G	03ALL	'FROM->TO'	'SMOKYHL6 230.00 - SUMMIT 230KV CKT 1'	319	319	0.16821	124.3996	'CIRCLE - MULLERGREN 230KV CKT 1'
13G	03ALL	'FROM->TO'	'SMOKYHL6 230.00 - SUMMIT 230KV CKT 1'	319	319	0.16821	124.3996	'CIRCLE - MULLERGREN 230KV CKT 1'
13G	03ALL	'FROM->TO'	'SMOKYHL6 230.00 - SUMMIT 230KV CKT 1'	319	319	0.11045	124.3996	'CIRCLE - MULLERGREN 230KV CKT 1'
13G	03ALL	'FROM->TO'	'SMOKYHL6 230.00 - SUMMIT 230KV CKT 1'	319	319	0.13445	124.3996	'CIRCLE - MULLERGREN 230KV CKT 1'
13G	03ALL	'FROM->TO'	'SMOKYHL6 230.00 - SUMMIT 230KV CKT 1'	319	319	0.15247	124.3996	'CIRCLE - MULLERGREN 230KV CKT 1'
13G	03ALL	'FROM->TO'	'SMOKYHL6 230.00 - SUMMIT 230KV CKT 1'	319	319	0.15247	124.3996	'CIRCLE - MULLERGREN 230KV CKT 1'
13G	03ALL	'FROM->TO'	'SMOKYHL6 230.00 - SUMMIT 230KV CKT 1'	319	319	0.62927	124.3996	'CIRCLE - MULLERGREN 230KV CKT 1'
13G	03ALL	'FROM->TO'	'SMOKYHL6 230.00 - SUMMIT 230KV CKT 1'	319	319	0.03265	124.3996	'CIRCLE - MULLERGREN 230KV CKT 1'
13G	03ALL	'FROM->TO'	'SMOKYHL6 230.00 - SUMMIT 230KV CKT 1'	319	319	0.13375	124.3996	'CIRCLE - MULLERGREN 230KV CKT 1'
13G	03ALL	'FROM->TO'	'SMOKYHL6 230.00 - SUMMIT 230KV CKT 1'	319	319	0.16867	124.3996	'CIRCLE - MULLERGREN 230KV CKT 1'
13G	03ALL	'FROM->TO'	'SMOKYHL6 230.00 - SUMMIT 230KV CKT 1'	319	319	0.13606	124.3996	'CIRCLE - MULLERGREN 230KV CKT 1'
13G	03ALL	'FROM->TO'	'ST JOHN - ST_JOHN 115KV CKT 1'	86	86	0.05129	115.5411	'CIRCLE - MULLERGREN 230KV CKT 1'
13G	03ALL	'FROM->TO'	'ST JOHN - ST_JOHN 115KV CKT 1'	86	86	0.10989	115.5411	'CIRCLE - MULLERGREN 230KV CKT 1'
13G	03ALL	'FROM->TO'	'ST JOHN - ST_JOHN 115KV CKT 1'	86	86	0.07459	115.5411	'CIRCLE - MULLERGREN 230KV CKT 1'
13G	03ALL	'FROM->TO'	'ST JOHN - ST_JOHN 115KV CKT 1'	86	86	0.05619	115.5411	'CIRCLE - MULLERGREN 230KV CKT 1'
13G	03ALL	'FROM->TO'	'ST JOHN - ST_JOHN 115KV CKT 1'	86	86	0.05619	115.5411	'CIRCLE - MULLERGREN 230KV CKT 1'
13G	03ALL	'FROM->TO'	'ST JOHN - ST_JOHN 115KV CKT 1'	86	86	0.1086	115.5411	'CIRCLE - MULLERGREN 230KV CKT 1'
13G	03ALL	'FROM->TO'	'ST JOHN - ST_JOHN 115KV CKT 1'	86	86	0.04544	115.5411	'CIRCLE - MULLERGREN 230KV CKT 1'
13G	03ALL	'FROM->TO'	'ST JOHN - ST_JOHN 115KV CKT 1'	86	86	0.04622	115.5411	'CIRCLE - MULLERGREN 230KV CKT 1'
13G	03ALL	'FROM->TO'	'ST JOHN - ST_JOHN 115KV CKT 1'	86	86	0.04622	115.5411	'CIRCLE - MULLERGREN 230KV CKT 1'
13G	03ALL	'FROM->TO'	'ST JOHN - ST_JOHN 115KV CKT 1'	86	86	0.12239	115.5411	'CIRCLE - MULLERGREN 230KV CKT 1'
13G	03ALL	'FROM->TO'	'ST JOHN - ST_JOHN 115KV CKT 1'	86	86	0.04428	115.5411	'CIRCLE - MULLERGREN 230KV CKT 1'
13G	03ALL	'FROM->TO'	'ST JOHN - ST_JOHN 115KV CKT 1'	86	86	0.05016	115.5411	'CIRCLE - MULLERGREN 230KV CKT 1'
13G	03ALL	'FROM->TO'	'ST JOHN - ST_JOHN 115KV CKT 1'	86	86	0.04222	115.5411	'CIRCLE - MULLERGREN 230KV CKT 1'
13G	03ALL	'TO->FROM'	'CLEARWATER - MILAN TAP 138KV CKT 1'	110	110	0.04604	134.0086	'CIRCLE - MULLERGREN 230KV CKT 1'
13G	03ALL	'TO->FROM'	'CLEARWATER - MILAN TAP 138KV CKT 1'	110	110	0.07567	134.0086	'CIRCLE - MULLERGREN 230KV CKT 1'
13G	03ALL	'TO->FROM'	'CLEARWATER - MILAN TAP 138KV CKT 1'	110	110	0.11719	134.0086	'CIRCLE - MULLERGREN 230KV CKT 1'
13G	03ALL	'TO->FROM'	'CLEARWATER - MILAN TAP 138KV CKT 1'	110	110	0.05854	134.0086	'CIRCLE - MULLERGREN 230KV CKT 1'
13G	03ALL	'TO->FROM'	'CLEARWATER - MILAN TAP 138KV CKT 1'	110	110	0.05854	134.0086	'CIRCLE - MULLERGREN 230KV CKT 1'
13G	03ALL	'TO->FROM'	'CLEARWATER - MILAN TAP 138KV CKT 1'	110	110	0.21753	134.0086	'CIRCLE - MULLERGREN 230KV CKT 1'
13G	03ALL	'TO->FROM'	'CLEARWATER - MILAN TAP 138KV CKT 1'	110	110	0.04512	134.0086	'CIRCLE - MULLERGREN 230KV CKT 1'
13G	03ALL	'TO->FROM'	'CLEARWATER - MILAN TAP 138KV CKT 1'	110	110	0.04761	134.0086	'CIRCLE - MULLERGREN 230KV CKT 1'
13G	03ALL	'TO->FROM'	'CLEARWATER - MILAN TAP 138KV CKT 1'	110	110	0.04761	134.0086	'CIRCLE - MULLERGREN 230KV CKT 1'
13G	03ALL	'TO->FROM'	'CLEARWATER - MILAN TAP 138KV CKT 1'	110	110	0.5301	134.0086	'CIRCLE - MULLERGREN 230KV CKT 1'
13G	03ALL	'TO->FROM'	'CLEARWATER - MILAN TAP 138KV CKT 1'	110	110	0.0444	134.0086	'CIRCLE - MULLERGREN 230KV CKT 1'
13G	03ALL	'TO->FROM'	'CLEARWATER - MILAN TAP 138KV CKT 1'	110	110	0.05172	134.0086	'CIRCLE - MULLERGREN 230KV CKT 1'
13G	03ALL	'TO->FROM'	'CLEARWATER - MILAN TAP 138KV CKT 1'	110	110	0.04343	134.0086	'CIRCLE - MULLERGREN 230KV CKT 1'
13G	03ALL	'FROM->TO'	'GREENSBURG - SUN CITY 115KV CKT 1'	120.7	129.5	0.18158	103.4613	'CIRCLE - MULLERGREN 230KV CKT 1'
13G	03ALL	'FROM->TO'	'GREENSBURG - SUN CITY 115KV CKT 1'	120.7	129.5	0.04945	103.4613	'CIRCLE - MULLERGREN 230KV CKT 1'
13G	03ALL	'FROM->TO'	'GREENSBURG - SUN CITY 115KV CKT 1'	120.7	129.5	0.04945	103.4613	'CIRCLE - MULLERGREN 230KV CKT 1'
13G	03ALL	'FROM->TO'	'GREENSBURG - SUN CITY 115KV CKT 1'	120.7	129.5	0.40237	103.4613	'CIRCLE - MULLERGREN 230KV CKT 1'
13G	03ALL	'FROM->TO'	'GREENSBURG - SUN CITY 115KV CKT 1'	120.7	129.5	0.03345	103.4613	'CIRCLE - MULLERGREN 230KV CKT 1'
13G	03ALL	'FROM->TO'	'GREENSBURG - SUN CITY 115KV CKT 1'	120.7	129.5	0.03795	103.4613	'CIRCLE - MULLERGREN 230KV CKT 1'
13G	03ALL	'FROM->TO'	'GREENSBURG - SUN CITY 115KV CKT 1'	120.7	129.5	0.03795	103.4613	'CIRCLE - MULLERGREN 230KV CKT 1'
13G	03ALL	'FROM->TO'	'GREENSBURG - SUN CITY 115KV CKT 1'	120.7	129.5	0.03344	103.4613	'CIRCLE - MULLERGREN 230KV CKT 1'

SEASON	GROUP	DIRECTION	MONITORED ELEMENT	RATE A (MVA)	RATE B (MVA)	TDF	TC%LOADING (%MVA)	CONTINGENCY NAME
13G	03ALL	'FROM->TO'	'GREENSBURG - SUN CITY 115KV CKT 1'	120.7	129.5	0.04115	103.4613	'CIRCLE - MULLERGREN 230KV CKT 1'
13G	03ALL	'FROM->TO'	'GREENSBURG - SUN CITY 115KV CKT 1'	120.7	129.5	0.0347	103.4613	'CIRCLE - MULLERGREN 230KV CKT 1'
13G	03ALL	'TO->FROM'	'GREENSBURG - SSTARTP3 115.00 115KV CKT 1	120.7	129.5	0.18158	111.3025	'CIRCLE - MULLERGREN 230KV CKT 1'
13G	03ALL	'TO->FROM'	'GREENSBURG - SSTARTP3 115.00 115KV CKT 1	120.7	129.5	0.04945	111.3025	'CIRCLE - MULLERGREN 230KV CKT 1'
13G	03ALL	'TO->FROM'	'GREENSBURG - SSTARTP3 115.00 115KV CKT 1	120.7	129.5	0.04945	111.3025	'CIRCLE - MULLERGREN 230KV CKT 1'
13G	03ALL	'TO->FROM'	'GREENSBURG - SSTARTP3 115.00 115KV CKT 1	120.7	129.5	0.40237	111.3025	'CIRCLE - MULLERGREN 230KV CKT 1'
13G	03ALL	'TO->FROM'	'GREENSBURG - SSTARTP3 115.00 115KV CKT 1	120.7	129.5	0.03345	111.3025	'CIRCLE - MULLERGREN 230KV CKT 1'
13G	03ALL	'TO->FROM'	'GREENSBURG - SSTARTP3 115.00 115KV CKT 1	120.7	129.5	0.03795	111.3025	'CIRCLE - MULLERGREN 230KV CKT 1'
13G	03ALL	'TO->FROM'	'GREENSBURG - SSTARTP3 115.00 115KV CKT 1	120.7	129.5	0.03795	111.3025	'CIRCLE - MULLERGREN 230KV CKT 1'
13G	03ALL	'TO->FROM'	'GREENSBURG - SSTARTP3 115.00 115KV CKT 1	120.7	129.5	0.03344	111.3025	'CIRCLE - MULLERGREN 230KV CKT 1'
13G	03ALL	'TO->FROM'	'GREENSBURG - SSTARTP3 115.00 115KV CKT 1	120.7	129.5	0.04115	111.3025	'CIRCLE - MULLERGREN 230KV CKT 1'
13G	03ALL	'TO->FROM'	'GREENSBURG - SSTARTP3 115.00 115KV CKT 1	120.7	129.5	0.0347	111.3025	'CIRCLE - MULLERGREN 230KV CKT 1'
13G	03ALL	'FROM->TO'	'HARPER - MILAN TAP 138KV CKT 1'	95.6	95.6	0.04604	161.4296	'CIRCLE - MULLERGREN 230KV CKT 1'
13G	03ALL	'FROM->TO'	'HARPER - MILAN TAP 138KV CKT 1'	95.6	95.6	0.07567	161.4296	'CIRCLE - MULLERGREN 230KV CKT 1'
13G	03ALL	'FROM->TO'	'HARPER - MILAN TAP 138KV CKT 1'	95.6	95.6	0.11719	161.4296	'CIRCLE - MULLERGREN 230KV CKT 1'
13G	03ALL	'FROM->TO'	'HARPER - MILAN TAP 138KV CKT 1'	95.6	95.6	0.05854	161.4296	'CIRCLE - MULLERGREN 230KV CKT 1'
13G	03ALL	'FROM->TO'	'HARPER - MILAN TAP 138KV CKT 1'	95.6	95.6	0.05854	161.4296	'CIRCLE - MULLERGREN 230KV CKT 1'
13G	03ALL	'FROM->TO'	'HARPER - MILAN TAP 138KV CKT 1'	95.6	95.6	0.21753	161.4296	'CIRCLE - MULLERGREN 230KV CKT 1'
13G	03ALL	'FROM->TO'	'HARPER - MILAN TAP 138KV CKT 1'	95.6	95.6	0.04512	161.4296	'CIRCLE - MULLERGREN 230KV CKT 1'
13G	03ALL	'FROM->TO'	'HARPER - MILAN TAP 138KV CKT 1'	95.6	95.6	0.04761	161.4296	'CIRCLE - MULLERGREN 230KV CKT 1'
13G	03ALL	'FROM->TO'	'HARPER - MILAN TAP 138KV CKT 1'	95.6	95.6	0.04761	161.4296	'CIRCLE - MULLERGREN 230KV CKT 1'
13G	03ALL	'FROM->TO'	'HARPER - MILAN TAP 138KV CKT 1'	95.6	95.6	0.5301	161.4296	'CIRCLE - MULLERGREN 230KV CKT 1'
13G	03ALL	'FROM->TO'	'HARPER - MILAN TAP 138KV CKT 1'	95.6	95.6	0.0444	161.4296	'CIRCLE - MULLERGREN 230KV CKT 1'
13G	03ALL	'FROM->TO'	'HARPER - MILAN TAP 138KV CKT 1'	95.6	95.6	0.05172	161.4296	'CIRCLE - MULLERGREN 230KV CKT 1'
13G	03ALL	'FROM->TO'	'HARPER - MILAN TAP 138KV CKT 1'	95.6	95.6	0.04343	161.4296	'CIRCLE - MULLERGREN 230KV CKT 1'
13G	03ALL	'TO->FROM'	'MEDICINE LODGE - SUN CITY 115KV CKT 1'	120.7	129.5	0.18158	100.8692	'CIRCLE - MULLERGREN 230KV CKT 1'
13G	03ALL	'TO->FROM'	'MEDICINE LODGE - SUN CITY 115KV CKT 1'	120.7	129.5	0.04945	100.8692	'CIRCLE - MULLERGREN 230KV CKT 1'
13G	03ALL	'TO->FROM'	'MEDICINE LODGE - SUN CITY 115KV CKT 1'	120.7	129.5	0.04945	100.8692	'CIRCLE - MULLERGREN 230KV CKT 1'
13G	03ALL	'TO->FROM'	'MEDICINE LODGE - SUN CITY 115KV CKT 1'	120.7	129.5	0.40237	100.8692	'CIRCLE - MULLERGREN 230KV CKT 1'
13G	03ALL	'TO->FROM'	'MEDICINE LODGE - SUN CITY 115KV CKT 1'	120.7	129.5	0.03345	100.8692	'CIRCLE - MULLERGREN 230KV CKT 1'
13G	03ALL	'TO->FROM'	'MEDICINE LODGE - SUN CITY 115KV CKT 1'	120.7	129.5	0.03795	100.8692	'CIRCLE - MULLERGREN 230KV CKT 1'
13G	03ALL	'TO->FROM'	'MEDICINE LODGE - SUN CITY 115KV CKT 1'	120.7	129.5	0.03795	100.8692	'CIRCLE - MULLERGREN 230KV CKT 1'
13G	03ALL	'TO->FROM'	'MEDICINE LODGE - SUN CITY 115KV CKT 1'	120.7	129.5	0.03344	100.8692	'CIRCLE - MULLERGREN 230KV CKT 1'
13G	03ALL	'TO->FROM'	'MEDICINE LODGE - SUN CITY 115KV CKT 1'	120.7	129.5	0.04115	100.8692	'CIRCLE - MULLERGREN 230KV CKT 1'
13G	03ALL	'TO->FROM'	'MEDICINE LODGE - SUN CITY 115KV CKT 1'	120.7	129.5	0.0347	100.8692	'CIRCLE - MULLERGREN 230KV CKT 1'
13G	03ALL	'TO->FROM'	'BARBER 3 115.00 - MEDICINE LODGE 115KV CKT 1'	79.7	79.7	0.12035	102.7418	'CIRCLE - MULLERGREN 230KV CKT 1'
13G	03ALL	'TO->FROM'	'BARBER 3 115.00 - MEDICINE LODGE 115KV CKT 1'	79.7	79.7	0.03988	102.7418	'CIRCLE - MULLERGREN 230KV CKT 1'
13G	03ALL	'TO->FROM'	'BARBER 3 115.00 - MEDICINE LODGE 115KV CKT 1'	79.7	79.7	0.03988	102.7418	'CIRCLE - MULLERGREN 230KV CKT 1'
13G	03ALL	'TO->FROM'	'BARBER 3 115.00 - MEDICINE LODGE 115KV CKT 1'	79.7	79.7	0.25544	102.7418	'CIRCLE - MULLERGREN 230KV CKT 1'
13G	03ALL	'TO->FROM'	'BARBER 3 115.00 - MEDICINE LODGE 115KV CKT 1'	79.7	79.7	0.03133	102.7418	'CIRCLE - MULLERGREN 230KV CKT 1'
13G	03ALL	'TO->FROM'	'BARBER 3 115.00 - MEDICINE LODGE 115KV CKT 1'	79.7	79.7	0.03133	102.7418	'CIRCLE - MULLERGREN 230KV CKT 1'
13G	03ALL	'TO->FROM'	'BARBER 3 115.00 - MEDICINE LODGE 115KV CKT 1'	79.7	79.7	0.034	102.7418	'CIRCLE - MULLERGREN 230KV CKT 1'
13G	03ALL	'FROM->TO'	'SEWARD - ST JOHN 115KV CKT 1'	80.3	80.3	0.07839	116.6844	'CIRCLE - MULLERGREN 230KV CKT 1'
13G	03ALL	'FROM->TO'	'SEWARD - ST JOHN 115KV CKT 1'	80.3	80.3	0.18237	116.6844	'CIRCLE - MULLERGREN 230KV CKT 1'
13G	03ALL	'FROM->TO'	'SEWARD - ST JOHN 115KV CKT 1'	80.3	80.3	0.06528	116.6844	'CIRCLE - MULLERGREN 230KV CKT 1'
13G	03ALL	'FROM->TO'	'SEWARD - ST JOHN 115KV CKT 1'	80.3	80.3	0.06528	116.6844	'CIRCLE - MULLERGREN 230KV CKT 1'
13G	03ALL	'FROM->TO'	'SEWARD - ST JOHN 115KV CKT 1'	80.3	80.3	0.05711	116.6844	'CIRCLE - MULLERGREN 230KV CKT 1'
13G	03ALL	'FROM->TO'	'SEWARD - ST JOHN 115KV CKT 1'	80.3	80.3	0.05588	116.6844	'CIRCLE - MULLERGREN 230KV CKT 1'
13G	03ALL	'FROM->TO'	'SEWARD - ST JOHN 115KV CKT 1'	80.3	80.3	0.05588	116.6844	'CIRCLE - MULLERGREN 230KV CKT 1'
13G	03ALL	'FROM->TO'	'SEWARD - ST JOHN 115KV CKT 1'	80.3	80.3	0.05524	116.6844	'CIRCLE - MULLERGREN 230KV CKT 1'
13G	03ALL	'FROM->TO'	'SEWARD - ST JOHN 115KV CKT 1'	80.3	80.3	0.06073	116.6844	'CIRCLE - MULLERGREN 230KV CKT 1'
13G	03ALL	'FROM->TO'	'SEWARD - ST JOHN 115KV CKT 1'	80.3	80.3	0.05095	116.6844	'CIRCLE - MULLERGREN 230KV CKT 1'
13G	03ALL	'FROM->TO'	'SMOKYHL6 230.00 - SUMMIT 230KV CKT 1'	319	319	0.1897	103.8567	'EAST MCPHERSON - SUMMIT 230KV CKT 1'
13G	03ALL	'FROM->TO'	'SMOKYHL6 230.00 - SUMMIT 230KV CKT 1'	319	319	0.0994	103.8567	'EAST MCPHERSON - SUMMIT 230KV CKT 1'
13G	03ALL	'FROM->TO'	'SMOKYHL6 230.00 - SUMMIT 230KV CKT 1'	319	319	0.10878	103.8567	'EAST MCPHERSON - SUMMIT 230KV CKT 1'
13G	03ALL	'FROM->TO'	'SMOKYHL6 230.00 - SUMMIT 230KV CKT 1'	319	319	0.12765	103.8567	'EAST MCPHERSON - SUMMIT 230KV CKT 1'
13G	03ALL	'FROM->TO'	'SMOKYHL6 230.00 - SUMMIT 230KV CKT 1'	319	319	0.12765	103.8567	'EAST MCPHERSON - SUMMIT 230KV CKT 1'
13G	03ALL	'FROM->TO'	'SMOKYHL6 230.00 - SUMMIT 230KV CKT 1'	319	319	0.08425	103.8567	'EAST MCPHERSON - SUMMIT 230KV CKT 1'
13G	03ALL	'FROM->TO'	'SMOKYHL6 230.00 - SUMMIT 230KV CKT 1'	319	319	0.10381	103.8567	'EAST MCPHERSON - SUMMIT 230KV CKT 1'
13G	03ALL	'FROM->TO'	'SMOKYHL6 230.00 - SUMMIT 230KV CKT 1'	319	319	0.11915	103.8567	'EAST MCPHERSON - SUMMIT 230KV CKT 1'
13G	03ALL	'FROM->TO'	'SMOKYHL6 230.00 - SUMMIT 230KV CKT 1'	319	319	0.11915	103.8567	'EAST MCPHERSON - SUMMIT 230KV CKT 1'
13G	03ALL	'FROM->TO'	'SMOKYHL6 230.00 - SUMMIT 230KV CKT 1'	319	319	0.61491	103.8567	'EAST MCPHERSON - SUMMIT 230KV CKT 1'
13G	03ALL	'FROM->TO'	'SMOKYHL6 230.00 - SUMMIT 230KV CKT 1'	319	319	0.10366	103.8567	'EAST MCPHERSON - SUMMIT 230KV CKT 1'
13G	03ALL	'FROM->TO'	'SMOKYHL6 230.00 - SUMMIT 230KV CKT 1'	319	319	0.13187	103.8567	'EAST MCPHERSON - SUMMIT 230KV CKT 1'

SEASON	GROUP	DIRECTION	MONITORED ELEMENT	RATE A (MVA)	RATE B (MVA)	TDF	TC%LOADING (%MVA)	CONTINGENCY NAME
13G	03ALL	'FROM->TO'	'SMOKYHL6 230.00 - SUMMIT 230KV CKT 1'	319	319	0.10628	103.8567	'EAST MCPHERSON - SUMMIT 230KV CKT 1'
13G	03ALL	'FROM->TO'	'SMOKYHL6 230.00 - SUMMIT 230KV CKT 1'	319	319	0.17871	103.8115	'SUMMIT - UNIONRG6 230.00 230KV CKT 1'
13G	03ALL	'FROM->TO'	'SMOKYHL6 230.00 - SUMMIT 230KV CKT 1'	319	319	0.08376	103.8115	'SUMMIT - UNIONRG6 230.00 230KV CKT 1'
13G	03ALL	'FROM->TO'	'SMOKYHL6 230.00 - SUMMIT 230KV CKT 1'	319	319	0.09821	103.8115	'SUMMIT - UNIONRG6 230.00 230KV CKT 1'
13G	03ALL	'FROM->TO'	'SMOKYHL6 230.00 - SUMMIT 230KV CKT 1'	319	319	0.11687	103.8115	'SUMMIT - UNIONRG6 230.00 230KV CKT 1'
13G	03ALL	'FROM->TO'	'SMOKYHL6 230.00 - SUMMIT 230KV CKT 1'	319	319	0.11687	103.8115	'SUMMIT - UNIONRG6 230.00 230KV CKT 1'
13G	03ALL	'FROM->TO'	'SMOKYHL6 230.00 - SUMMIT 230KV CKT 1'	319	319	0.07318	103.8115	'SUMMIT - UNIONRG6 230.00 230KV CKT 1'
13G	03ALL	'FROM->TO'	'SMOKYHL6 230.00 - SUMMIT 230KV CKT 1'	319	319	0.09574	103.8115	'SUMMIT - UNIONRG6 230.00 230KV CKT 1'
13G	03ALL	'FROM->TO'	'SMOKYHL6 230.00 - SUMMIT 230KV CKT 1'	319	319	0.11039	103.8115	'SUMMIT - UNIONRG6 230.00 230KV CKT 1'
13G	03ALL	'FROM->TO'	'SMOKYHL6 230.00 - SUMMIT 230KV CKT 1'	319	319	0.11039	103.8115	'SUMMIT - UNIONRG6 230.00 230KV CKT 1'
13G	03ALL	'FROM->TO'	'SMOKYHL6 230.00 - SUMMIT 230KV CKT 1'	319	319	0.61182	103.8115	'SUMMIT - UNIONRG6 230.00 230KV CKT 1'
13G	03ALL	'FROM->TO'	'SMOKYHL6 230.00 - SUMMIT 230KV CKT 1'	319	319	0.0958	103.8115	'SUMMIT - UNIONRG6 230.00 230KV CKT 1'
13G	03ALL	'FROM->TO'	'SMOKYHL6 230.00 - SUMMIT 230KV CKT 1'	319	319	0.12222	103.8115	'SUMMIT - UNIONRG6 230.00 230KV CKT 1'
13G	03ALL	'FROM->TO'	'SMOKYHL6 230.00 - SUMMIT 230KV CKT 1'	319	319	0.09841	103.8115	'SUMMIT - UNIONRG6 230.00 230KV CKT 1'
13G	03ALL	'FROM->TO'	'HARPER - MILAN TAP 138KV CKT 1'	95.6	95.6	0.03558	153.7349	'CENTENNIAL - COWSKIN 138KV CKT 1'
13G	03ALL	'FROM->TO'	'HARPER - MILAN TAP 138KV CKT 1'	95.6	95.6	0.06194	153.7349	'CENTENNIAL - COWSKIN 138KV CKT 1'
13G	03ALL	'FROM->TO'	'HARPER - MILAN TAP 138KV CKT 1'	95.6	95.6	0.10777	153.7349	'CENTENNIAL - COWSKIN 138KV CKT 1'
13G	03ALL	'FROM->TO'	'HARPER - MILAN TAP 138KV CKT 1'	95.6	95.6	0.04826	153.7349	'CENTENNIAL - COWSKIN 138KV CKT 1'
13G	03ALL	'FROM->TO'	'HARPER - MILAN TAP 138KV CKT 1'	95.6	95.6	0.04826	153.7349	'CENTENNIAL - COWSKIN 138KV CKT 1'
13G	03ALL	'FROM->TO'	'HARPER - MILAN TAP 138KV CKT 1'	95.6	95.6	0.20871	153.7349	'CENTENNIAL - COWSKIN 138KV CKT 1'
13G	03ALL	'FROM->TO'	'HARPER - MILAN TAP 138KV CKT 1'	95.6	95.6	0.0374	153.7349	'CENTENNIAL - COWSKIN 138KV CKT 1'
13G	03ALL	'FROM->TO'	'HARPER - MILAN TAP 138KV CKT 1'	95.6	95.6	0.03926	153.7349	'CENTENNIAL - COWSKIN 138KV CKT 1'
13G	03ALL	'FROM->TO'	'HARPER - MILAN TAP 138KV CKT 1'	95.6	95.6	0.03926	153.7349	'CENTENNIAL - COWSKIN 138KV CKT 1'
13G	03ALL	'FROM->TO'	'HARPER - MILAN TAP 138KV CKT 1'	95.6	95.6	0.52255	153.7349	'CENTENNIAL - COWSKIN 138KV CKT 1'
13G	03ALL	'FROM->TO'	'HARPER - MILAN TAP 138KV CKT 1'	95.6	95.6	0.03684	153.7349	'CENTENNIAL - COWSKIN 138KV CKT 1'
13G	03ALL	'FROM->TO'	'HARPER - MILAN TAP 138KV CKT 1'	95.6	95.6	0.04252	153.7349	'CENTENNIAL - COWSKIN 138KV CKT 1'
13G	03ALL	'FROM->TO'	'HARPER - MILAN TAP 138KV CKT 1'	95.6	95.6	0.03595	153.7349	'CENTENNIAL - COWSKIN 138KV CKT 1'
13G	03ALL	'FROM->TO'	'SMOKYHL6 230.00 - SUMMIT 230KV CKT 1'	319	319	0.1894	109.7367	'CLEARWATER - GILL ENERGY CENTER WEST 138KV CKT 1
13G	03ALL	'FROM->TO'	'SMOKYHL6 230.00 - SUMMIT 230KV CKT 1'	319	319	0.09662	109.7367	'CLEARWATER - GILL ENERGY CENTER WEST 138KV CKT 1
13G	03ALL	'FROM->TO'	'SMOKYHL6 230.00 - SUMMIT 230KV CKT 1'	319	319	0.11518	109.7367	'CLEARWATER - GILL ENERGY CENTER WEST 138KV CKT 1
13G	03ALL	'FROM->TO'	'SMOKYHL6 230.00 - SUMMIT 230KV CKT 1'	319	319	0.12757	109.7367	'CLEARWATER - GILL ENERGY CENTER WEST 138KV CKT 1
13G	03ALL	'FROM->TO'	'SMOKYHL6 230.00 - SUMMIT 230KV CKT 1'	319	319	0.12757	109.7367	'CLEARWATER - GILL ENERGY CENTER WEST 138KV CKT 1
13G	03ALL	'FROM->TO'	'SMOKYHL6 230.00 - SUMMIT 230KV CKT 1'	319	319	0.10116	109.7367	'CLEARWATER - GILL ENERGY CENTER WEST 138KV CKT 1
13G	03ALL	'FROM->TO'	'SMOKYHL6 230.00 - SUMMIT 230KV CKT 1'	319	319	0.10403	109.7367	'CLEARWATER - GILL ENERGY CENTER WEST 138KV CKT 1
13G	03ALL	'FROM->TO'	'SMOKYHL6 230.00 - SUMMIT 230KV CKT 1'	319	319	0.11941	109.7367	'CLEARWATER - GILL ENERGY CENTER WEST 138KV CKT 1
13G	03ALL	'FROM->TO'	'SMOKYHL6 230.00 - SUMMIT 230KV CKT 1'	319	319	0.11941	109.7367	'CLEARWATER - GILL ENERGY CENTER WEST 138KV CKT 1
13G	03ALL	'FROM->TO'	'SMOKYHL6 230.00 - SUMMIT 230KV CKT 1'	319	319	0.62817	109.7367	'CLEARWATER - GILL ENERGY CENTER WEST 138KV CKT 1
13G	03ALL	'FROM->TO'	'SMOKYHL6 230.00 - SUMMIT 230KV CKT 1'	319	319	0.07765	109.7367	'CLEARWATER - GILL ENERGY CENTER WEST 138KV CKT 1
13G	03ALL	'FROM->TO'	'SMOKYHL6 230.00 - SUMMIT 230KV CKT 1'	319	319	0.10397	109.7367	'CLEARWATER - GILL ENERGY CENTER WEST 138KV CKT 1
13G	03ALL	'FROM->TO'	'SMOKYHL6 230.00 - SUMMIT 230KV CKT 1'	319	319	0.13209	109.7367	'CLEARWATER - GILL ENERGY CENTER WEST 138KV CKT 1
13G	03ALL	'FROM->TO'	'SMOKYHL6 230.00 - SUMMIT 230KV CKT 1'	319	319	0.10657	109.7367	'CLEARWATER - GILL ENERGY CENTER WEST 138KV CKT 1
13G	03ALL	'FROM->TO'	'HUNTSVILLE - HUTCHINSON ENERGY CENTER 115KV CKT 1	68	68	0.03692	107.403	'CLEARWATER - GILL ENERGY CENTER WEST 138KV CKT 1
13G	03ALL	'FROM->TO'	'HUNTSVILLE - HUTCHINSON ENERGY CENTER 115KV CKT 1	68	68	0.09576	107.403	'CLEARWATER - GILL ENERGY CENTER WEST 138KV CKT 1
13G	03ALL	'FROM->TO'	'HUNTSVILLE - HUTCHINSON ENERGY CENTER 115KV CKT 1	68	68	0.08418	107.403	'CLEARWATER - GILL ENERGY CENTER WEST 138KV CKT 1
13G	03ALL	'FROM->TO'	'HUNTSVILLE - HUTCHINSON ENERGY CENTER 115KV CKT 1	68	68	0.04613	107.403	'CLEARWATER - GILL ENERGY CENTER WEST 138KV CKT 1
13G	03ALL	'FROM->TO'	'HUNTSVILLE - HUTCHINSON ENERGY CENTER 115KV CKT 1	68	68	0.04613	107.403	'CLEARWATER - GILL ENERGY CENTER WEST 138KV CKT 1
13G	03ALL	'FROM->TO'	'HUNTSVILLE - HUTCHINSON ENERGY CENTER 115KV CKT 1	68	68	0.14951	107.403	'CLEARWATER - GILL ENERGY CENTER WEST 138KV CKT 1
13G	03ALL	'FROM->TO'	'HUNTSVILLE - HUTCHINSON ENERGY CENTER 115KV CKT 1	68	68	0.03819	107.403	'CLEARWATER - GILL ENERGY CENTER WEST 138KV CKT 1
13G	03ALL	'FROM->TO'	'HUNTSVILLE - HUTCHINSON ENERGY CENTER 115KV CKT 1	68	68	0.03804	107.403	'CLEARWATER - GILL ENERGY CENTER WEST 138KV CKT 1
13G	03ALL	'FROM->TO'	'HUNTSVILLE - HUTCHINSON ENERGY CENTER 115KV CKT 1	68	68	0.03804	107.403	'CLEARWATER - GILL ENERGY CENTER WEST 138KV CKT 1
13G	03ALL	'FROM->TO'	'HUNTSVILLE - HUTCHINSON ENERGY CENTER 115KV CKT 1	68	68	0.25947	107.403	'CLEARWATER - GILL ENERGY CENTER WEST 138KV CKT 1
13G	03ALL	'FROM->TO'	'HUNTSVILLE - HUTCHINSON ENERGY CENTER 115KV CKT 1	68	68	0.03723	107.403	'CLEARWATER - GILL ENERGY CENTER WEST 138KV CKT 1
13G	03ALL	'FROM->TO'	'HUNTSVILLE - HUTCHINSON ENERGY CENTER 115KV CKT 1	68	68	0.0409	107.403	'CLEARWATER - GILL ENERGY CENTER WEST 138KV CKT 1
13G	03ALL	'FROM->TO'	'HUNTSVILLE - HUTCHINSON ENERGY CENTER 115KV CKT 1	68	68	0.03512	107.403	'CLEARWATER - GILL ENERGY CENTER WEST 138KV CKT 1
13G	03ALL	'FROM->TO'	'ST JOHN - ST_JOHN 115KV CKT 1'	86	86	0.03692	121.0084	'CLEARWATER - GILL ENERGY CENTER WEST 138KV CKT 1
13G	03ALL	'FROM->TO'	'ST JOHN - ST_JOHN 115KV CKT 1'	86	86	0.09576	121.0084	'CLEARWATER - GILL ENERGY CENTER WEST 138KV CKT 1
13G	03ALL	'FROM->TO'	'ST JOHN - ST_JOHN 115KV CKT 1'	86	86	0.08418	121.0084	'CLEARWATER - GILL ENERGY CENTER WEST 138KV CKT 1
13G	03ALL	'FROM->TO'	'ST JOHN - ST_JOHN 115KV CKT 1'	86	86	0.04613	121.0084	'CLEARWATER - GILL ENERGY CENTER WEST 138KV CKT 1
13G	03ALL	'FROM->TO'	'ST JOHN - ST_JOHN 115KV CKT 1'	86	86	0.04613	121.0084	'CLEARWATER - GILL ENERGY CENTER WEST 138KV CKT 1
13G	03ALL	'FROM->TO'	'ST JOHN - ST_JOHN 115KV CKT 1'	86	86	0.14951	121.0084	'CLEARWATER - GILL ENERGY CENTER WEST 138KV CKT 1
13G	03ALL	'FROM->TO'	'ST JOHN - ST_JOHN 115KV CKT 1'	86	86	0.03819	121.0084	'CLEARWATER - GILL ENERGY CENTER WEST 138KV CKT 1
13G	03ALL	'FROM->TO'	'ST JOHN - ST_JOHN 115KV CKT 1'	86	86	0.03804	121.0084	'CLEARWATER - GILL ENERGY CENTER WEST 138KV CKT 1
13G	03ALL	'FROM->TO'	'ST JOHN - ST_JOHN 115KV CKT 1'	86	86	0.03804	121.0084	'CLEARWATER - GILL ENERGY CENTER WEST 138KV CKT 1
13G	03ALL	'FROM->TO'	'ST JOHN - ST_JOHN 115KV CKT 1'	86	86	0.25947	121.0084	'CLEARWATER - GILL ENERGY CENTER WEST 138KV CKT 1

SEASON	GROUP	DIRECTION	MONITORED ELEMENT	RATE A (MVA)	RATE B (MVA)	TDF	TC%LOADING (%MVA)	CONTINGENCY NAME
13G	03ALL	'FROM->TO'	'ST JOHN - ST_JOHN 115KV CKT 1'	86	86	0.03723	121.0084	'CLEARWATER - GILL ENERGY CENTER WEST 138KV CKT 1
13G	03ALL	'FROM->TO'	'ST JOHN - ST_JOHN 115KV CKT 1'	86	86	0.0409	121.0084	'CLEARWATER - GILL ENERGY CENTER WEST 138KV CKT 1
13G	03ALL	'FROM->TO'	'ST JOHN - ST_JOHN 115KV CKT 1'	86	86	0.03512	121.0084	'CLEARWATER - GILL ENERGY CENTER WEST 138KV CKT 1
13G	03ALL	'FROM->TO'	'SMOKYHL6 230.00 - SUMMIT 230KV CKT 1'	319	319	0.1894	109.8381	'CLEARWATER - MILAN TAP 138KV CKT 1'
13G	03ALL	'FROM->TO'	'SMOKYHL6 230.00 - SUMMIT 230KV CKT 1'	319	319	0.09662	109.8381	'CLEARWATER - MILAN TAP 138KV CKT 1'
13G	03ALL	'FROM->TO'	'SMOKYHL6 230.00 - SUMMIT 230KV CKT 1'	319	319	0.11518	109.8381	'CLEARWATER - MILAN TAP 138KV CKT 1'
13G	03ALL	'FROM->TO'	'SMOKYHL6 230.00 - SUMMIT 230KV CKT 1'	319	319	0.12757	109.8381	'CLEARWATER - MILAN TAP 138KV CKT 1'
13G	03ALL	'FROM->TO'	'SMOKYHL6 230.00 - SUMMIT 230KV CKT 1'	319	319	0.12757	109.8381	'CLEARWATER - MILAN TAP 138KV CKT 1'
13G	03ALL	'FROM->TO'	'SMOKYHL6 230.00 - SUMMIT 230KV CKT 1'	319	319	0.10116	109.8381	'CLEARWATER - MILAN TAP 138KV CKT 1'
13G	03ALL	'FROM->TO'	'SMOKYHL6 230.00 - SUMMIT 230KV CKT 1'	319	319	0.10403	109.8381	'CLEARWATER - MILAN TAP 138KV CKT 1'
13G	03ALL	'FROM->TO'	'SMOKYHL6 230.00 - SUMMIT 230KV CKT 1'	319	319	0.11941	109.8381	'CLEARWATER - MILAN TAP 138KV CKT 1'
13G	03ALL	'FROM->TO'	'SMOKYHL6 230.00 - SUMMIT 230KV CKT 1'	319	319	0.11941	109.8381	'CLEARWATER - MILAN TAP 138KV CKT 1'
13G	03ALL	'FROM->TO'	'SMOKYHL6 230.00 - SUMMIT 230KV CKT 1'	319	319	0.62817	109.8381	'CLEARWATER - MILAN TAP 138KV CKT 1'
13G	03ALL	'FROM->TO'	'SMOKYHL6 230.00 - SUMMIT 230KV CKT 1'	319	319	0.07765	109.8381	'CLEARWATER - MILAN TAP 138KV CKT 1'
13G	03ALL	'FROM->TO'	'SMOKYHL6 230.00 - SUMMIT 230KV CKT 1'	319	319	0.10397	109.8381	'CLEARWATER - MILAN TAP 138KV CKT 1'
13G	03ALL	'FROM->TO'	'SMOKYHL6 230.00 - SUMMIT 230KV CKT 1'	319	319	0.13209	109.8381	'CLEARWATER - MILAN TAP 138KV CKT 1'
13G	03ALL	'FROM->TO'	'SMOKYHL6 230.00 - SUMMIT 230KV CKT 1'	319	319	0.10657	109.8381	'CLEARWATER - MILAN TAP 138KV CKT 1'
13G	03ALL	'FROM->TO'	'HUNTSVILLE - HUTCHINSON ENERGY CENTER 115KV CKT 1	68	68	0.03692	108.748	'CLEARWATER - MILAN TAP 138KV CKT 1'
13G	03ALL	'FROM->TO'	'HUNTSVILLE - HUTCHINSON ENERGY CENTER 115KV CKT 1	68	68	0.09576	108.748	'CLEARWATER - MILAN TAP 138KV CKT 1'
13G	03ALL	'FROM->TO'	'HUNTSVILLE - HUTCHINSON ENERGY CENTER 115KV CKT 1	68	68	0.08418	108.748	'CLEARWATER - MILAN TAP 138KV CKT 1'
13G	03ALL	'FROM->TO'	'HUNTSVILLE - HUTCHINSON ENERGY CENTER 115KV CKT 1	68	68	0.04613	108.748	'CLEARWATER - MILAN TAP 138KV CKT 1'
13G	03ALL	'FROM->TO'	'HUNTSVILLE - HUTCHINSON ENERGY CENTER 115KV CKT 1	68	68	0.04613	108.748	'CLEARWATER - MILAN TAP 138KV CKT 1'
13G	03ALL	'FROM->TO'	'HUNTSVILLE - HUTCHINSON ENERGY CENTER 115KV CKT 1	68	68	0.14951	108.748	'CLEARWATER - MILAN TAP 138KV CKT 1'
13G	03ALL	'FROM->TO'	'HUNTSVILLE - HUTCHINSON ENERGY CENTER 115KV CKT 1	68	68	0.03819	108.748	'CLEARWATER - MILAN TAP 138KV CKT 1'
13G	03ALL	'FROM->TO'	'HUNTSVILLE - HUTCHINSON ENERGY CENTER 115KV CKT 1	68	68	0.03804	108.748	'CLEARWATER - MILAN TAP 138KV CKT 1'
13G	03ALL	'FROM->TO'	'HUNTSVILLE - HUTCHINSON ENERGY CENTER 115KV CKT 1	68	68	0.03804	108.748	'CLEARWATER - MILAN TAP 138KV CKT 1'
13G	03ALL	'FROM->TO'	'HUNTSVILLE - HUTCHINSON ENERGY CENTER 115KV CKT 1	68	68	0.25947	108.748	'CLEARWATER - MILAN TAP 138KV CKT 1'
13G	03ALL	'FROM->TO'	'HUNTSVILLE - HUTCHINSON ENERGY CENTER 115KV CKT 1	68	68	0.03723	108.748	'CLEARWATER - MILAN TAP 138KV CKT 1'
13G	03ALL	'FROM->TO'	'HUNTSVILLE - HUTCHINSON ENERGY CENTER 115KV CKT 1	68	68	0.0409	108.748	'CLEARWATER - MILAN TAP 138KV CKT 1'
13G	03ALL	'FROM->TO'	'HUNTSVILLE - HUTCHINSON ENERGY CENTER 115KV CKT 1	68	68	0.03512	108.748	'CLEARWATER - MILAN TAP 138KV CKT 1'
13G	03ALL	'FROM->TO'	'ST JOHN - ST_JOHN 115KV CKT 1'	86	86	0.03692	123.66	'CLEARWATER - MILAN TAP 138KV CKT 1'
13G	03ALL	'FROM->TO'	'ST JOHN - ST_JOHN 115KV CKT 1'	86	86	0.09576	123.66	'CLEARWATER - MILAN TAP 138KV CKT 1'
13G	03ALL	'FROM->TO'	'ST JOHN - ST_JOHN 115KV CKT 1'	86	86	0.08418	123.66	'CLEARWATER - MILAN TAP 138KV CKT 1'
13G	03ALL	'FROM->TO'	'ST JOHN - ST_JOHN 115KV CKT 1'	86	86	0.04613	123.66	'CLEARWATER - MILAN TAP 138KV CKT 1'
13G	03ALL	'FROM->TO'	'ST JOHN - ST_JOHN 115KV CKT 1'	86	86	0.04613	123.66	'CLEARWATER - MILAN TAP 138KV CKT 1'
13G	03ALL	'FROM->TO'	'ST JOHN - ST_JOHN 115KV CKT 1'	86	86	0.14951	123.66	'CLEARWATER - MILAN TAP 138KV CKT 1'
13G	03ALL	'FROM->TO'	'ST JOHN - ST_JOHN 115KV CKT 1'	86	86	0.03819	123.66	'CLEARWATER - MILAN TAP 138KV CKT 1'
13G	03ALL	'FROM->TO'	'ST JOHN - ST_JOHN 115KV CKT 1'	86	86	0.03804	123.66	'CLEARWATER - MILAN TAP 138KV CKT 1'
13G	03ALL	'FROM->TO'	'ST JOHN - ST_JOHN 115KV CKT 1'	86	86	0.03804	123.66	'CLEARWATER - MILAN TAP 138KV CKT 1'
13G	03ALL	'FROM->TO'	'ST JOHN - ST_JOHN 115KV CKT 1'	86	86	0.25947	123.66	'CLEARWATER - MILAN TAP 138KV CKT 1'
13G	03ALL	'FROM->TO'	'ST JOHN - ST_JOHN 115KV CKT 1'	86	86	0.03723	123.66	'CLEARWATER - MILAN TAP 138KV CKT 1'
13G	03ALL	'FROM->TO'	'ST JOHN - ST_JOHN 115KV CKT 1'	86	86	0.0409	123.66	'CLEARWATER - MILAN TAP 138KV CKT 1'
13G	03ALL	'FROM->TO'	'ST JOHN - ST_JOHN 115KV CKT 1'	86	86	0.03512	123.66	'CLEARWATER - MILAN TAP 138KV CKT 1'
13G	03ALL	'TO->FROM'	'CLEARWATER - MILAN TAP 138KV CKT 1'	110	110	0.03558	129.4456	'45TH ST4 138.00 - COWSKIN 138KV CKT 1
13G	03ALL	'TO->FROM'	'CLEARWATER - MILAN TAP 138KV CKT 1'	110	110	0.06194	129.4456	'45TH ST4 138.00 - COWSKIN 138KV CKT 1
13G	03ALL	'TO->FROM'	'CLEARWATER - MILAN TAP 138KV CKT 1'	110	110	0.10777	129.4456	'45TH ST4 138.00 - COWSKIN 138KV CKT 1
13G	03ALL	'TO->FROM'	'CLEARWATER - MILAN TAP 138KV CKT 1'	110	110	0.04826	129.4456	'45TH ST4 138.00 - COWSKIN 138KV CKT 1
13G	03ALL	'TO->FROM'	'CLEARWATER - MILAN TAP 138KV CKT 1'	110	110	0.04826	129.4456	'45TH ST4 138.00 - COWSKIN 138KV CKT 1
13G	03ALL	'TO->FROM'	'CLEARWATER - MILAN TAP 138KV CKT 1'	110	110	0.20871	129.4456	'45TH ST4 138.00 - COWSKIN 138KV CKT 1
13G	03ALL	'TO->FROM'	'CLEARWATER - MILAN TAP 138KV CKT 1'	110	110	0.0374	129.4456	'45TH ST4 138.00 - COWSKIN 138KV CKT 1
13G	03ALL	'TO->FROM'	'CLEARWATER - MILAN TAP 138KV CKT 1'	110	110	0.03926	129.4456	'45TH ST4 138.00 - COWSKIN 138KV CKT 1
13G	03ALL	'TO->FROM'	'CLEARWATER - MILAN TAP 138KV CKT 1'	110	110	0.03926	129.4456	'45TH ST4 138.00 - COWSKIN 138KV CKT 1
13G	03ALL	'TO->FROM'	'CLEARWATER - MILAN TAP 138KV CKT 1'	110	110	0.52255	129.4456	'45TH ST4 138.00 - COWSKIN 138KV CKT 1
13G	03ALL	'TO->FROM'	'CLEARWATER - MILAN TAP 138KV CKT 1'	110	110	0.03684	129.4456	'45TH ST4 138.00 - COWSKIN 138KV CKT 1
13G	03ALL	'TO->FROM'	'CLEARWATER - MILAN TAP 138KV CKT 1'	110	110	0.04252	129.4456	'45TH ST4 138.00 - COWSKIN 138KV CKT 1
13G	03ALL	'TO->FROM'	'CLEARWATER - MILAN TAP 138KV CKT 1'	110	110	0.03595	129.4456	'45TH ST4 138.00 - COWSKIN 138KV CKT 1
13G	03ALL	'FROM->TO'	'HARPER - MILAN TAP 138KV CKT 1'	95.6	95.6	0.03558	156.419	'45TH ST4 138.00 - COWSKIN 138KV CKT 1
13G	03ALL	'FROM->TO'	'HARPER - MILAN TAP 138KV CKT 1'	95.6	95.6	0.06194	156.419	'45TH ST4 138.00 - COWSKIN 138KV CKT 1
13G	03ALL	'FROM->TO'	'HARPER - MILAN TAP 138KV CKT 1'	95.6	95.6	0.10777	156.419	'45TH ST4 138.00 - COWSKIN 138KV CKT 1
13G	03ALL	'FROM->TO'	'HARPER - MILAN TAP 138KV CKT 1'	95.6	95.6	0.04826	156.419	'45TH ST4 138.00 - COWSKIN 138KV CKT 1
13G	03ALL	'FROM->TO'	'HARPER - MILAN TAP 138KV CKT 1'	95.6	95.6	0.04826	156.419	'45TH ST4 138.00 - COWSKIN 138KV CKT 1
13G	03ALL	'FROM->TO'	'HARPER - MILAN TAP 138KV CKT 1'	95.6	95.6	0.20871	156.419	'45TH ST4 138.00 - COWSKIN 138KV CKT 1
13G	03ALL	'FROM->TO'	'HARPER - MILAN TAP 138KV CKT 1'	95.6	95.6	0.0374	156.419	'45TH ST4 138.00 - COWSKIN 138KV CKT 1
13G	03ALL	'FROM->TO'	'HARPER - MILAN TAP 138KV CKT 1'	95.6	95.6	0.03926	156.419	'45TH ST4 138.00 - COWSKIN 138KV CKT 1

SEASON	GROUP	DIRECTION	MONITORED ELEMENT	RATE A (MVA)	RATE B (MVA)	TDF	TC%LOADING (%MVA)	CONTINGENCY NAME
13G	03ALL	'FROM->TO'	'HARPER - MILAN TAP 138KV CKT 1'	95.6	95.6	0.03926	156.419	'45TH ST4 138.00 - COWSKIN 138KV CKT 1
13G	03ALL	'FROM->TO'	'HARPER - MILAN TAP 138KV CKT 1'	95.6	95.6	0.52255	156.419	'45TH ST4 138.00 - COWSKIN 138KV CKT 1
13G	03ALL	'FROM->TO'	'HARPER - MILAN TAP 138KV CKT 1'	95.6	95.6	0.03684	156.419	'45TH ST4 138.00 - COWSKIN 138KV CKT 1
13G	03ALL	'FROM->TO'	'HARPER - MILAN TAP 138KV CKT 1'	95.6	95.6	0.04252	156.419	'45TH ST4 138.00 - COWSKIN 138KV CKT 1
13G	03ALL	'FROM->TO'	'HARPER - MILAN TAP 138KV CKT 1'	95.6	95.6	0.03595	156.419	'45TH ST4 138.00 - COWSKIN 138KV CKT 1
13G	03ALL	'TO->FROM'	'CLEARWATER - MILAN TAP 138KV CKT 1'	110	110	0.03565	128.5357	'EVANS ENERGY CENTER SOUTH - LAKERIDGE 138KV CKT 1
13G	03ALL	'TO->FROM'	'CLEARWATER - MILAN TAP 138KV CKT 1'	110	110	0.0621	128.5357	'EVANS ENERGY CENTER SOUTH - LAKERIDGE 138KV CKT 1
13G	03ALL	'TO->FROM'	'CLEARWATER - MILAN TAP 138KV CKT 1'	110	110	0.10811	128.5357	'EVANS ENERGY CENTER SOUTH - LAKERIDGE 138KV CKT 1
13G	03ALL	'TO->FROM'	'CLEARWATER - MILAN TAP 138KV CKT 1'	110	110	0.04839	128.5357	'EVANS ENERGY CENTER SOUTH - LAKERIDGE 138KV CKT 1
13G	03ALL	'TO->FROM'	'CLEARWATER - MILAN TAP 138KV CKT 1'	110	110	0.04839	128.5357	'EVANS ENERGY CENTER SOUTH - LAKERIDGE 138KV CKT 1
13G	03ALL	'TO->FROM'	'CLEARWATER - MILAN TAP 138KV CKT 1'	110	110	0.20942	128.5357	'EVANS ENERGY CENTER SOUTH - LAKERIDGE 138KV CKT 1
13G	03ALL	'TO->FROM'	'CLEARWATER - MILAN TAP 138KV CKT 1'	110	110	0.0375	128.5357	'EVANS ENERGY CENTER SOUTH - LAKERIDGE 138KV CKT 1
13G	03ALL	'TO->FROM'	'CLEARWATER - MILAN TAP 138KV CKT 1'	110	110	0.03936	128.5357	'EVANS ENERGY CENTER SOUTH - LAKERIDGE 138KV CKT 1
13G	03ALL	'TO->FROM'	'CLEARWATER - MILAN TAP 138KV CKT 1'	110	110	0.03936	128.5357	'EVANS ENERGY CENTER SOUTH - LAKERIDGE 138KV CKT 1
13G	03ALL	'TO->FROM'	'CLEARWATER - MILAN TAP 138KV CKT 1'	110	110	0.52441	128.5357	'EVANS ENERGY CENTER SOUTH - LAKERIDGE 138KV CKT 1
13G	03ALL	'TO->FROM'	'CLEARWATER - MILAN TAP 138KV CKT 1'	110	110	0.03693	128.5357	'EVANS ENERGY CENTER SOUTH - LAKERIDGE 138KV CKT 1
13G	03ALL	'TO->FROM'	'CLEARWATER - MILAN TAP 138KV CKT 1'	110	110	0.04262	128.5357	'EVANS ENERGY CENTER SOUTH - LAKERIDGE 138KV CKT 1
13G	03ALL	'TO->FROM'	'CLEARWATER - MILAN TAP 138KV CKT 1'	110	110	0.03604	128.5357	'EVANS ENERGY CENTER SOUTH - LAKERIDGE 138KV CKT 1
13G	03ALL	'FROM->TO'	'HARPER - MILAN TAP 138KV CKT 1'	95.6	95.6	0.03565	155.3336	'EVANS ENERGY CENTER SOUTH - LAKERIDGE 138KV CKT 1
13G	03ALL	'FROM->TO'	'HARPER - MILAN TAP 138KV CKT 1'	95.6	95.6	0.0621	155.3336	'EVANS ENERGY CENTER SOUTH - LAKERIDGE 138KV CKT 1
13G	03ALL	'FROM->TO'	'HARPER - MILAN TAP 138KV CKT 1'	95.6	95.6	0.10811	155.3336	'EVANS ENERGY CENTER SOUTH - LAKERIDGE 138KV CKT 1
13G	03ALL	'FROM->TO'	'HARPER - MILAN TAP 138KV CKT 1'	95.6	95.6	0.04839	155.3336	'EVANS ENERGY CENTER SOUTH - LAKERIDGE 138KV CKT 1
13G	03ALL	'FROM->TO'	'HARPER - MILAN TAP 138KV CKT 1'	95.6	95.6	0.04839	155.3336	'EVANS ENERGY CENTER SOUTH - LAKERIDGE 138KV CKT 1
13G	03ALL	'FROM->TO'	'HARPER - MILAN TAP 138KV CKT 1'	95.6	95.6	0.20942	155.3336	'EVANS ENERGY CENTER SOUTH - LAKERIDGE 138KV CKT 1
13G	03ALL	'FROM->TO'	'HARPER - MILAN TAP 138KV CKT 1'	95.6	95.6	0.0375	155.3336	'EVANS ENERGY CENTER SOUTH - LAKERIDGE 138KV CKT 1
13G	03ALL	'FROM->TO'	'HARPER - MILAN TAP 138KV CKT 1'	95.6	95.6	0.03936	155.3336	'EVANS ENERGY CENTER SOUTH - LAKERIDGE 138KV CKT 1
13G	03ALL	'FROM->TO'	'HARPER - MILAN TAP 138KV CKT 1'	95.6	95.6	0.03936	155.3336	'EVANS ENERGY CENTER SOUTH - LAKERIDGE 138KV CKT 1
13G	03ALL	'FROM->TO'	'HARPER - MILAN TAP 138KV CKT 1'	95.6	95.6	0.52441	155.3336	'EVANS ENERGY CENTER SOUTH - LAKERIDGE 138KV CKT 1
13G	03ALL	'FROM->TO'	'HARPER - MILAN TAP 138KV CKT 1'	95.6	95.6	0.03693	155.3336	'EVANS ENERGY CENTER SOUTH - LAKERIDGE 138KV CKT 1
13G	03ALL	'FROM->TO'	'HARPER - MILAN TAP 138KV CKT 1'	95.6	95.6	0.04262	155.3336	'EVANS ENERGY CENTER SOUTH - LAKERIDGE 138KV CKT 1
13G	03ALL	'FROM->TO'	'HARPER - MILAN TAP 138KV CKT 1'	95.6	95.6	0.03604	155.3336	'EVANS ENERGY CENTER SOUTH - LAKERIDGE 138KV CKT 1
13G	03ALL	'TO->FROM'	'CLEARWATER - MILAN TAP 138KV CKT 1'	110	110	0.03558	129.5455	'45TH ST4 138.00 - EVANS ENERGY CENTER SOUTH 138KV CKT 1
13G	03ALL	'TO->FROM'	'CLEARWATER - MILAN TAP 138KV CKT 1'	110	110	0.06194	129.5455	'45TH ST4 138.00 - EVANS ENERGY CENTER SOUTH 138KV CKT 1
13G	03ALL	'TO->FROM'	'CLEARWATER - MILAN TAP 138KV CKT 1'	110	110	0.10777	129.5455	'45TH ST4 138.00 - EVANS ENERGY CENTER SOUTH 138KV CKT 1
13G	03ALL	'TO->FROM'	'CLEARWATER - MILAN TAP 138KV CKT 1'	110	110	0.04826	129.5455	'45TH ST4 138.00 - EVANS ENERGY CENTER SOUTH 138KV CKT 1
13G	03ALL	'TO->FROM'	'CLEARWATER - MILAN TAP 138KV CKT 1'	110	110	0.04826	129.5455	'45TH ST4 138.00 - EVANS ENERGY CENTER SOUTH 138KV CKT 1
13G	03ALL	'TO->FROM'	'CLEARWATER - MILAN TAP 138KV CKT 1'	110	110	0.20871	129.5455	'45TH ST4 138.00 - EVANS ENERGY CENTER SOUTH 138KV CKT 1
13G	03ALL	'TO->FROM'	'CLEARWATER - MILAN TAP 138KV CKT 1'	110	110	0.0374	129.5455	'45TH ST4 138.00 - EVANS ENERGY CENTER SOUTH 138KV CKT 1
13G	03ALL	'TO->FROM'	'CLEARWATER - MILAN TAP 138KV CKT 1'	110	110	0.03926	129.5455	'45TH ST4 138.00 - EVANS ENERGY CENTER SOUTH 138KV CKT 1
13G	03ALL	'TO->FROM'	'CLEARWATER - MILAN TAP 138KV CKT 1'	110	110	0.03926	129.5455	'45TH ST4 138.00 - EVANS ENERGY CENTER SOUTH 138KV CKT 1
13G	03ALL	'TO->FROM'	'CLEARWATER - MILAN TAP 138KV CKT 1'	110	110	0.52255	129.5455	'45TH ST4 138.00 - EVANS ENERGY CENTER SOUTH 138KV CKT 1
13G	03ALL	'TO->FROM'	'CLEARWATER - MILAN TAP 138KV CKT 1'	110	110	0.03684	129.5455	'45TH ST4 138.00 - EVANS ENERGY CENTER SOUTH 138KV CKT 1
13G	03ALL	'TO->FROM'	'CLEARWATER - MILAN TAP 138KV CKT 1'	110	110	0.04252	129.5455	'45TH ST4 138.00 - EVANS ENERGY CENTER SOUTH 138KV CKT 1
13G	03ALL	'TO->FROM'	'CLEARWATER - MILAN TAP 138KV CKT 1'	110	110	0.03595	129.5455	'45TH ST4 138.00 - EVANS ENERGY CENTER SOUTH 138KV CKT 1
13G	03ALL	'FROM->TO'	'HARPER - MILAN TAP 138KV CKT 1'	95.6	95.6	0.03558	156.5376	'45TH ST4 138.00 - EVANS ENERGY CENTER SOUTH 138KV CKT 1
13G	03ALL	'FROM->TO'	'HARPER - MILAN TAP 138KV CKT 1'	95.6	95.6	0.06194	156.5376	'45TH ST4 138.00 - EVANS ENERGY CENTER SOUTH 138KV CKT 1
13G	03ALL	'FROM->TO'	'HARPER - MILAN TAP 138KV CKT 1'	95.6	95.6	0.10777	156.5376	'45TH ST4 138.00 - EVANS ENERGY CENTER SOUTH 138KV CKT 1
13G	03ALL	'FROM->TO'	'HARPER - MILAN TAP 138KV CKT 1'	95.6	95.6	0.04826	156.5376	'45TH ST4 138.00 - EVANS ENERGY CENTER SOUTH 138KV CKT 1
13G	03ALL	'FROM->TO'	'HARPER - MILAN TAP 138KV CKT 1'	95.6	95.6	0.04826	156.5376	'45TH ST4 138.00 - EVANS ENERGY CENTER SOUTH 138KV CKT 1
13G	03ALL	'FROM->TO'	'HARPER - MILAN TAP 138KV CKT 1'	95.6	95.6	0.20871	156.5376	'45TH ST4 138.00 - EVANS ENERGY CENTER SOUTH 138KV CKT 1
13G	03ALL	'FROM->TO'	'HARPER - MILAN TAP 138KV CKT 1'	95.6	95.6	0.0374	156.5376	'45TH ST4 138.00 - EVANS ENERGY CENTER SOUTH 138KV CKT 1
13G	03ALL	'FROM->TO'	'HARPER - MILAN TAP 138KV CKT 1'	95.6	95.6	0.03926	156.5376	'45TH ST4 138.00 - EVANS ENERGY CENTER SOUTH 138KV CKT 1
13G	03ALL	'FROM->TO'	'HARPER - MILAN TAP 138KV CKT 1'	95.6	95.6	0.03926	156.5376	'45TH ST4 138.00 - EVANS ENERGY CENTER SOUTH 138KV CKT 1
13G	03ALL	'FROM->TO'	'HARPER - MILAN TAP 138KV CKT 1'	95.6	95.6	0.52255	156.5376	'45TH ST4 138.00 - EVANS ENERGY CENTER SOUTH 138KV CKT 1
13G	03ALL	'FROM->TO'	'HARPER - MILAN TAP 138KV CKT 1'	95.6	95.6	0.03684	156.5376	'45TH ST4 138.00 - EVANS ENERGY CENTER SOUTH 138KV CKT 1
13G	03ALL	'FROM->TO'	'HARPER - MILAN TAP 138KV CKT 1'	95.6	95.6	0.04252	156.5376	'45TH ST4 138.00 - EVANS ENERGY CENTER SOUTH 138KV CKT 1
13G	03ALL	'FROM->TO'	'HARPER - MILAN TAP 138KV CKT 1'	95.6	95.6	0.03595	156.5376	'45TH ST4 138.00 - EVANS ENERGY CENTER SOUTH 138KV CKT 1
13G	03ALL	'TO->FROM'	'CLEARWATER - MILAN TAP 138KV CKT 1'	110	110	0.03458	119.8593	'GILL ENERGY CENTER SOUTH - GILL ENERGY CENTER WEST 138KV CKT 1
13G	03ALL	'TO->FROM'	'CLEARWATER - MILAN TAP 138KV CKT 1'	110	110	0.06072	119.8593	'GILL ENERGY CENTER SOUTH - GILL ENERGY CENTER WEST 138KV CKT 1
13G	03ALL	'TO->FROM'	'CLEARWATER - MILAN TAP 138KV CKT 1'	110	110	0.10646	119.8593	'GILL ENERGY CENTER SOUTH - GILL ENERGY CENTER WEST 138KV CKT 1
13G	03ALL	'TO->FROM'	'CLEARWATER - MILAN TAP 138KV CKT 1'	110	110	0.0473	119.8593	'GILL ENERGY CENTER SOUTH - GILL ENERGY CENTER WEST 138KV CKT 1
13G	03ALL	'TO->FROM'	'CLEARWATER - MILAN TAP 138KV CKT 1'	110	110	0.0473	119.8593	'GILL ENERGY CENTER SOUTH - GILL ENERGY CENTER WEST 138KV CKT 1
13G	03ALL	'TO->FROM'	'CLEARWATER - MILAN TAP 138KV CKT 1'	110	110	0.20678	119.8593	'GILL ENERGY CENTER SOUTH - GILL ENERGY CENTER WEST 138KV CKT 1
13G	03ALL	'TO->FROM'	'CLEARWATER - MILAN TAP 138KV CKT 1'	110	110	0.03664	119.8593	'GILL ENERGY CENTER SOUTH - GILL ENERGY CENTER WEST 138KV CKT 1

SEASON	GROUP	DIRECTION	MONITORED ELEMENT	RATE A (MVA)	RATE B (MVA)	TDF	TC%LOADING (%MVA)	CONTINGENCY NAME
13G	03ALL	'TO->FROM'	'CLEARWATER - MILAN TAP 138KV CKT 1'	110	110	0.03845	119.8593	'GILL ENERGY CENTER SOUTH - GILL ENERGY CENTER WEST 138KV CKT 1
13G	03ALL	'TO->FROM'	'CLEARWATER - MILAN TAP 138KV CKT 1'	110	110	0.03845	119.8593	'GILL ENERGY CENTER SOUTH - GILL ENERGY CENTER WEST 138KV CKT 1
13G	03ALL	'TO->FROM'	'CLEARWATER - MILAN TAP 138KV CKT 1'	110	110	0.51882	119.8593	'GILL ENERGY CENTER SOUTH - GILL ENERGY CENTER WEST 138KV CKT 1
13G	03ALL	'TO->FROM'	'CLEARWATER - MILAN TAP 138KV CKT 1'	110	110	0.03608	119.8593	'GILL ENERGY CENTER SOUTH - GILL ENERGY CENTER WEST 138KV CKT 1
13G	03ALL	'TO->FROM'	'CLEARWATER - MILAN TAP 138KV CKT 1'	110	110	0.04162	119.8593	'GILL ENERGY CENTER SOUTH - GILL ENERGY CENTER WEST 138KV CKT 1
13G	03ALL	'TO->FROM'	'CLEARWATER - MILAN TAP 138KV CKT 1'	110	110	0.03522	119.8593	'GILL ENERGY CENTER SOUTH - GILL ENERGY CENTER WEST 138KV CKT 1
13G	03ALL	'FROM->TO'	'HARPER - MILAN TAP 138KV CKT 1'	95.6	95.6	0.03458	145.3707	'GILL ENERGY CENTER SOUTH - GILL ENERGY CENTER WEST 138KV CKT 1
13G	03ALL	'FROM->TO'	'HARPER - MILAN TAP 138KV CKT 1'	95.6	95.6	0.06072	145.3707	'GILL ENERGY CENTER SOUTH - GILL ENERGY CENTER WEST 138KV CKT 1
13G	03ALL	'FROM->TO'	'HARPER - MILAN TAP 138KV CKT 1'	95.6	95.6	0.10646	145.3707	'GILL ENERGY CENTER SOUTH - GILL ENERGY CENTER WEST 138KV CKT 1
13G	03ALL	'FROM->TO'	'HARPER - MILAN TAP 138KV CKT 1'	95.6	95.6	0.0473	145.3707	'GILL ENERGY CENTER SOUTH - GILL ENERGY CENTER WEST 138KV CKT 1
13G	03ALL	'FROM->TO'	'HARPER - MILAN TAP 138KV CKT 1'	95.6	95.6	0.0473	145.3707	'GILL ENERGY CENTER SOUTH - GILL ENERGY CENTER WEST 138KV CKT 1
13G	03ALL	'FROM->TO'	'HARPER - MILAN TAP 138KV CKT 1'	95.6	95.6	0.20678	145.3707	'GILL ENERGY CENTER SOUTH - GILL ENERGY CENTER WEST 138KV CKT 1
13G	03ALL	'FROM->TO'	'HARPER - MILAN TAP 138KV CKT 1'	95.6	95.6	0.03664	145.3707	'GILL ENERGY CENTER SOUTH - GILL ENERGY CENTER WEST 138KV CKT 1
13G	03ALL	'FROM->TO'	'HARPER - MILAN TAP 138KV CKT 1'	95.6	95.6	0.03845	145.3707	'GILL ENERGY CENTER SOUTH - GILL ENERGY CENTER WEST 138KV CKT 1
13G	03ALL	'FROM->TO'	'HARPER - MILAN TAP 138KV CKT 1'	95.6	95.6	0.03845	145.3707	'GILL ENERGY CENTER SOUTH - GILL ENERGY CENTER WEST 138KV CKT 1
13G	03ALL	'FROM->TO'	'HARPER - MILAN TAP 138KV CKT 1'	95.6	95.6	0.51882	145.3707	'GILL ENERGY CENTER SOUTH - GILL ENERGY CENTER WEST 138KV CKT 1
13G	03ALL	'FROM->TO'	'HARPER - MILAN TAP 138KV CKT 1'	95.6	95.6	0.03608	145.3707	'GILL ENERGY CENTER SOUTH - GILL ENERGY CENTER WEST 138KV CKT 1
13G	03ALL	'FROM->TO'	'HARPER - MILAN TAP 138KV CKT 1'	95.6	95.6	0.04162	145.3707	'GILL ENERGY CENTER SOUTH - GILL ENERGY CENTER WEST 138KV CKT 1
13G	03ALL	'FROM->TO'	'HARPER - MILAN TAP 138KV CKT 1'	95.6	95.6	0.03522	145.3707	'GILL ENERGY CENTER SOUTH - GILL ENERGY CENTER WEST 138KV CKT 1
13G	03ALL	'TO->FROM'	'CLEARWATER - MILAN TAP 138KV CKT 1'	110	110	0.03565	127.9326	'HOOVER NORTH - LAKERIDGE 138KV CKT 1'
13G	03ALL	'TO->FROM'	'CLEARWATER - MILAN TAP 138KV CKT 1'	110	110	0.0621	127.9326	'HOOVER NORTH - LAKERIDGE 138KV CKT 1'
13G	03ALL	'TO->FROM'	'CLEARWATER - MILAN TAP 138KV CKT 1'	110	110	0.10811	127.9326	'HOOVER NORTH - LAKERIDGE 138KV CKT 1'
13G	03ALL	'TO->FROM'	'CLEARWATER - MILAN TAP 138KV CKT 1'	110	110	0.04839	127.9326	'HOOVER NORTH - LAKERIDGE 138KV CKT 1'
13G	03ALL	'TO->FROM'	'CLEARWATER - MILAN TAP 138KV CKT 1'	110	110	0.04839	127.9326	'HOOVER NORTH - LAKERIDGE 138KV CKT 1'
13G	03ALL	'TO->FROM'	'CLEARWATER - MILAN TAP 138KV CKT 1'	110	110	0.20942	127.9326	'HOOVER NORTH - LAKERIDGE 138KV CKT 1'
13G	03ALL	'TO->FROM'	'CLEARWATER - MILAN TAP 138KV CKT 1'	110	110	0.0375	127.9326	'HOOVER NORTH - LAKERIDGE 138KV CKT 1'
13G	03ALL	'TO->FROM'	'CLEARWATER - MILAN TAP 138KV CKT 1'	110	110	0.03936	127.9326	'HOOVER NORTH - LAKERIDGE 138KV CKT 1'
13G	03ALL	'TO->FROM'	'CLEARWATER - MILAN TAP 138KV CKT 1'	110	110	0.03936	127.9326	'HOOVER NORTH - LAKERIDGE 138KV CKT 1'
13G	03ALL	'TO->FROM'	'CLEARWATER - MILAN TAP 138KV CKT 1'	110	110	0.52441	127.9326	'HOOVER NORTH - LAKERIDGE 138KV CKT 1'
13G	03ALL	'TO->FROM'	'CLEARWATER - MILAN TAP 138KV CKT 1'	110	110	0.03693	127.9326	'HOOVER NORTH - LAKERIDGE 138KV CKT 1'
13G	03ALL	'TO->FROM'	'CLEARWATER - MILAN TAP 138KV CKT 1'	110	110	0.04262	127.9326	'HOOVER NORTH - LAKERIDGE 138KV CKT 1'
13G	03ALL	'TO->FROM'	'CLEARWATER - MILAN TAP 138KV CKT 1'	110	110	0.03604	127.9326	'HOOVER NORTH - LAKERIDGE 138KV CKT 1'
13G	03ALL	'FROM->TO'	'HARPER - MILAN TAP 138KV CKT 1'	95.6	95.6	0.03565	154.6148	'HOOVER NORTH - LAKERIDGE 138KV CKT 1'
13G	03ALL	'FROM->TO'	'HARPER - MILAN TAP 138KV CKT 1'	95.6	95.6	0.0621	154.6148	'HOOVER NORTH - LAKERIDGE 138KV CKT 1'
13G	03ALL	'FROM->TO'	'HARPER - MILAN TAP 138KV CKT 1'	95.6	95.6	0.10811	154.6148	'HOOVER NORTH - LAKERIDGE 138KV CKT 1'
13G	03ALL	'FROM->TO'	'HARPER - MILAN TAP 138KV CKT 1'	95.6	95.6	0.04839	154.6148	'HOOVER NORTH - LAKERIDGE 138KV CKT 1'
13G	03ALL	'FROM->TO'	'HARPER - MILAN TAP 138KV CKT 1'	95.6	95.6	0.04839	154.6148	'HOOVER NORTH - LAKERIDGE 138KV CKT 1'
13G	03ALL	'FROM->TO'	'HARPER - MILAN TAP 138KV CKT 1'	95.6	95.6	0.20942	154.6148	'HOOVER NORTH - LAKERIDGE 138KV CKT 1'
13G	03ALL	'FROM->TO'	'HARPER - MILAN TAP 138KV CKT 1'	95.6	95.6	0.0375	154.6148	'HOOVER NORTH - LAKERIDGE 138KV CKT 1'
13G	03ALL	'FROM->TO'	'HARPER - MILAN TAP 138KV CKT 1'	95.6	95.6	0.03936	154.6148	'HOOVER NORTH - LAKERIDGE 138KV CKT 1'
13G	03ALL	'FROM->TO'	'HARPER - MILAN TAP 138KV CKT 1'	95.6	95.6	0.03936	154.6148	'HOOVER NORTH - LAKERIDGE 138KV CKT 1'
13G	03ALL	'FROM->TO'	'HARPER - MILAN TAP 138KV CKT 1'	95.6	95.6	0.52441	154.6148	'HOOVER NORTH - LAKERIDGE 138KV CKT 1'
13G	03ALL	'FROM->TO'	'HARPER - MILAN TAP 138KV CKT 1'	95.6	95.6	0.03693	154.6148	'HOOVER NORTH - LAKERIDGE 138KV CKT 1'
13G	03ALL	'FROM->TO'	'HARPER - MILAN TAP 138KV CKT 1'	95.6	95.6	0.04262	154.6148	'HOOVER NORTH - LAKERIDGE 138KV CKT 1'
13G	03ALL	'FROM->TO'	'HARPER - MILAN TAP 138KV CKT 1'	95.6	95.6	0.03604	154.6148	'HOOVER NORTH - LAKERIDGE 138KV CKT 1'
13G	03ALL	'TO->FROM'	'CLEARWATER - MILAN TAP 138KV CKT 1'	110	110	0.03624	119.7501	'CIRCLE - HUTCHINSON ENERGY CENTER 115KV CKT 1'
13G	03ALL	'TO->FROM'	'CLEARWATER - MILAN TAP 138KV CKT 1'	110	110	0.06475	119.7501	'CIRCLE - HUTCHINSON ENERGY CENTER 115KV CKT 1'
13G	03ALL	'TO->FROM'	'CLEARWATER - MILAN TAP 138KV CKT 1'	110	110	0.1103	119.7501	'CIRCLE - HUTCHINSON ENERGY CENTER 115KV CKT 1'
13G	03ALL	'TO->FROM'	'CLEARWATER - MILAN TAP 138KV CKT 1'	110	110	0.04935	119.7501	'CIRCLE - HUTCHINSON ENERGY CENTER 115KV CKT 1'
13G	03ALL	'TO->FROM'	'CLEARWATER - MILAN TAP 138KV CKT 1'	110	110	0.04935	119.7501	'CIRCLE - HUTCHINSON ENERGY CENTER 115KV CKT 1'
13G	03ALL	'TO->FROM'	'CLEARWATER - MILAN TAP 138KV CKT 1'	110	110	0.21369	119.7501	'CIRCLE - HUTCHINSON ENERGY CENTER 115KV CKT 1'
13G	03ALL	'TO->FROM'	'CLEARWATER - MILAN TAP 138KV CKT 1'	110	110	0.03833	119.7501	'CIRCLE - HUTCHINSON ENERGY CENTER 115KV CKT 1'
13G	03ALL	'TO->FROM'	'CLEARWATER - MILAN TAP 138KV CKT 1'	110	110	0.04015	119.7501	'CIRCLE - HUTCHINSON ENERGY CENTER 115KV CKT 1'
13G	03ALL	'TO->FROM'	'CLEARWATER - MILAN TAP 138KV CKT 1'	110	110	0.04015	119.7501	'CIRCLE - HUTCHINSON ENERGY CENTER 115KV CKT 1'
13G	03ALL	'TO->FROM'	'CLEARWATER - MILAN TAP 138KV CKT 1'	110	110	0.53162	119.7501	'CIRCLE - HUTCHINSON ENERGY CENTER 115KV CKT 1'
13G	03ALL	'TO->FROM'	'CLEARWATER - MILAN TAP 138KV CKT 1'	110	110	0.03773	119.7501	'CIRCLE - HUTCHINSON ENERGY CENTER 115KV CKT 1'
13G	03ALL	'TO->FROM'	'CLEARWATER - MILAN TAP 138KV CKT 1'	110	110	0.04345	119.7501	'CIRCLE - HUTCHINSON ENERGY CENTER 115KV CKT 1'
13G	03ALL	'TO->FROM'	'CLEARWATER - MILAN TAP 138KV CKT 1'	110	110	0.03678	119.7501	'CIRCLE - HUTCHINSON ENERGY CENTER 115KV CKT 1'
13G	03ALL	'FROM->TO'	'HARPER - MILAN TAP 138KV CKT 1'	95.6	95.6	0.03624	145.1224	'CIRCLE - HUTCHINSON ENERGY CENTER 115KV CKT 1'
13G	03ALL	'FROM->TO'	'HARPER - MILAN TAP 138KV CKT 1'	95.6	95.6	0.06475	145.1224	'CIRCLE - HUTCHINSON ENERGY CENTER 115KV CKT 1'
13G	03ALL	'FROM->TO'	'HARPER - MILAN TAP 138KV CKT 1'	95.6	95.6	0.1103	145.1224	'CIRCLE - HUTCHINSON ENERGY CENTER 115KV CKT 1'
13G	03ALL	'FROM->TO'	'HARPER - MILAN TAP 138KV CKT 1'	95.6	95.6	0.04935	145.1224	'CIRCLE - HUTCHINSON ENERGY CENTER 115KV CKT 1'
13G	03ALL	'FROM->TO'	'HARPER - MILAN TAP 138KV CKT 1'	95.6	95.6	0.04935	145.1224	'CIRCLE - HUTCHINSON ENERGY CENTER 115KV CKT 1'
13G	03ALL	'FROM->TO'	'HARPER - MILAN TAP 138KV CKT 1'	95.6	95.6	0.21369	145.1224	'CIRCLE - HUTCHINSON ENERGY CENTER 115KV CKT 1'

SEASON	GROUP	DIRECTION	MONITORED ELEMENT	RATE A (MVA)	RATE B (MVA)	TDF	TC%LOADING (%MVA)	CONTINGENCY NAME
13G	03ALL	'FROM->TO'	'HARPER - MILAN TAP 138KV CKT 1'	95.6	95.6	0.03833	145.1224	'CIRCLE - HUTCHINSON ENERGY CENTER 115KV CKT 1'
13G	03ALL	'FROM->TO'	'HARPER - MILAN TAP 138KV CKT 1'	95.6	95.6	0.04015	145.1224	'CIRCLE - HUTCHINSON ENERGY CENTER 115KV CKT 1'
13G	03ALL	'FROM->TO'	'HARPER - MILAN TAP 138KV CKT 1'	95.6	95.6	0.04015	145.1224	'CIRCLE - HUTCHINSON ENERGY CENTER 115KV CKT 1'
13G	03ALL	'FROM->TO'	'HARPER - MILAN TAP 138KV CKT 1'	95.6	95.6	0.53162	145.1224	'CIRCLE - HUTCHINSON ENERGY CENTER 115KV CKT 1'
13G	03ALL	'FROM->TO'	'HARPER - MILAN TAP 138KV CKT 1'	95.6	95.6	0.03773	145.1224	'CIRCLE - HUTCHINSON ENERGY CENTER 115KV CKT 1'
13G	03ALL	'FROM->TO'	'HARPER - MILAN TAP 138KV CKT 1'	95.6	95.6	0.04345	145.1224	'CIRCLE - HUTCHINSON ENERGY CENTER 115KV CKT 1'
13G	03ALL	'FROM->TO'	'HARPER - MILAN TAP 138KV CKT 1'	95.6	95.6	0.03678	145.1224	'CIRCLE - HUTCHINSON ENERGY CENTER 115KV CKT 1'
13G	03ALL	'FROM->TO'	'SMOKYHL6 230.00 - SUMMIT 230KV CKT 1'	319	319	0.1894	111.0814	'FLATRDG3 - HARPER 138KV CKT 1'
13G	03ALL	'FROM->TO'	'SMOKYHL6 230.00 - SUMMIT 230KV CKT 1'	319	319	0.09662	111.0814	'FLATRDG3 - HARPER 138KV CKT 1'
13G	03ALL	'FROM->TO'	'SMOKYHL6 230.00 - SUMMIT 230KV CKT 1'	319	319	0.11518	111.0814	'FLATRDG3 - HARPER 138KV CKT 1'
13G	03ALL	'FROM->TO'	'SMOKYHL6 230.00 - SUMMIT 230KV CKT 1'	319	319	0.12757	111.0814	'FLATRDG3 - HARPER 138KV CKT 1'
13G	03ALL	'FROM->TO'	'SMOKYHL6 230.00 - SUMMIT 230KV CKT 1'	319	319	0.12757	111.0814	'FLATRDG3 - HARPER 138KV CKT 1'
13G	03ALL	'FROM->TO'	'SMOKYHL6 230.00 - SUMMIT 230KV CKT 1'	319	319	0.10116	111.0814	'FLATRDG3 - HARPER 138KV CKT 1'
13G	03ALL	'FROM->TO'	'SMOKYHL6 230.00 - SUMMIT 230KV CKT 1'	319	319	0.10403	111.0814	'FLATRDG3 - HARPER 138KV CKT 1'
13G	03ALL	'FROM->TO'	'SMOKYHL6 230.00 - SUMMIT 230KV CKT 1'	319	319	0.11941	111.0814	'FLATRDG3 - HARPER 138KV CKT 1'
13G	03ALL	'FROM->TO'	'SMOKYHL6 230.00 - SUMMIT 230KV CKT 1'	319	319	0.11941	111.0814	'FLATRDG3 - HARPER 138KV CKT 1'
13G	03ALL	'FROM->TO'	'SMOKYHL6 230.00 - SUMMIT 230KV CKT 1'	319	319	0.62817	111.0814	'FLATRDG3 - HARPER 138KV CKT 1'
13G	03ALL	'FROM->TO'	'SMOKYHL6 230.00 - SUMMIT 230KV CKT 1'	319	319	0.07765	111.0814	'FLATRDG3 - HARPER 138KV CKT 1'
13G	03ALL	'FROM->TO'	'SMOKYHL6 230.00 - SUMMIT 230KV CKT 1'	319	319	0.10397	111.0814	'FLATRDG3 - HARPER 138KV CKT 1'
13G	03ALL	'FROM->TO'	'SMOKYHL6 230.00 - SUMMIT 230KV CKT 1'	319	319	0.13209	111.0814	'FLATRDG3 - HARPER 138KV CKT 1'
13G	03ALL	'FROM->TO'	'SMOKYHL6 230.00 - SUMMIT 230KV CKT 1'	319	319	0.10657	111.0814	'FLATRDG3 - HARPER 138KV CKT 1'
13G	03ALL	'FROM->TO'	'HUNTSVILLE - HUTCHINSON ENERGY CENTER 115KV CKT 1	68	68	0.03692	118.1699	'FLATRDG3 - HARPER 138KV CKT 1'
13G	03ALL	'FROM->TO'	'HUNTSVILLE - HUTCHINSON ENERGY CENTER 115KV CKT 1	68	68	0.09576	118.1699	'FLATRDG3 - HARPER 138KV CKT 1'
13G	03ALL	'FROM->TO'	'HUNTSVILLE - HUTCHINSON ENERGY CENTER 115KV CKT 1	68	68	0.08418	118.1699	'FLATRDG3 - HARPER 138KV CKT 1'
13G	03ALL	'FROM->TO'	'HUNTSVILLE - HUTCHINSON ENERGY CENTER 115KV CKT 1	68	68	0.04613	118.1699	'FLATRDG3 - HARPER 138KV CKT 1'
13G	03ALL	'FROM->TO'	'HUNTSVILLE - HUTCHINSON ENERGY CENTER 115KV CKT 1	68	68	0.04613	118.1699	'FLATRDG3 - HARPER 138KV CKT 1'
13G	03ALL	'FROM->TO'	'HUNTSVILLE - HUTCHINSON ENERGY CENTER 115KV CKT 1	68	68	0.14951	118.1699	'FLATRDG3 - HARPER 138KV CKT 1'
13G	03ALL	'FROM->TO'	'HUNTSVILLE - HUTCHINSON ENERGY CENTER 115KV CKT 1	68	68	0.03819	118.1699	'FLATRDG3 - HARPER 138KV CKT 1'
13G	03ALL	'FROM->TO'	'HUNTSVILLE - HUTCHINSON ENERGY CENTER 115KV CKT 1	68	68	0.03804	118.1699	'FLATRDG3 - HARPER 138KV CKT 1'
13G	03ALL	'FROM->TO'	'HUNTSVILLE - HUTCHINSON ENERGY CENTER 115KV CKT 1	68	68	0.03804	118.1699	'FLATRDG3 - HARPER 138KV CKT 1'
13G	03ALL	'FROM->TO'	'HUNTSVILLE - HUTCHINSON ENERGY CENTER 115KV CKT 1	68	68	0.25947	118.1699	'FLATRDG3 - HARPER 138KV CKT 1'
13G	03ALL	'FROM->TO'	'HUNTSVILLE - HUTCHINSON ENERGY CENTER 115KV CKT 1	68	68	0.03723	118.1699	'FLATRDG3 - HARPER 138KV CKT 1'
13G	03ALL	'FROM->TO'	'HUNTSVILLE - HUTCHINSON ENERGY CENTER 115KV CKT 1	68	68	0.0409	118.1699	'FLATRDG3 - HARPER 138KV CKT 1'
13G	03ALL	'FROM->TO'	'HUNTSVILLE - HUTCHINSON ENERGY CENTER 115KV CKT 1	68	68	0.03512	118.1699	'FLATRDG3 - HARPER 138KV CKT 1'
13G	03ALL	'FROM->TO'	'ST JOHN - ST_JOHN 115KV CKT 1'	86	86	0.03692	131.5631	'FLATRDG3 - HARPER 138KV CKT 1'
13G	03ALL	'FROM->TO'	'ST JOHN - ST_JOHN 115KV CKT 1'	86	86	0.09576	131.5631	'FLATRDG3 - HARPER 138KV CKT 1'
13G	03ALL	'FROM->TO'	'ST JOHN - ST_JOHN 115KV CKT 1'	86	86	0.08418	131.5631	'FLATRDG3 - HARPER 138KV CKT 1'
13G	03ALL	'FROM->TO'	'ST JOHN - ST_JOHN 115KV CKT 1'	86	86	0.04613	131.5631	'FLATRDG3 - HARPER 138KV CKT 1'
13G	03ALL	'FROM->TO'	'ST JOHN - ST_JOHN 115KV CKT 1'	86	86	0.04613	131.5631	'FLATRDG3 - HARPER 138KV CKT 1'
13G	03ALL	'FROM->TO'	'ST JOHN - ST_JOHN 115KV CKT 1'	86	86	0.14951	131.5631	'FLATRDG3 - HARPER 138KV CKT 1'
13G	03ALL	'FROM->TO'	'ST JOHN - ST_JOHN 115KV CKT 1'	86	86	0.03819	131.5631	'FLATRDG3 - HARPER 138KV CKT 1'
13G	03ALL	'FROM->TO'	'ST JOHN - ST_JOHN 115KV CKT 1'	86	86	0.03804	131.5631	'FLATRDG3 - HARPER 138KV CKT 1'
13G	03ALL	'FROM->TO'	'ST JOHN - ST_JOHN 115KV CKT 1'	86	86	0.03804	131.5631	'FLATRDG3 - HARPER 138KV CKT 1'
13G	03ALL	'FROM->TO'	'ST JOHN - ST_JOHN 115KV CKT 1'	86	86	0.25947	131.5631	'FLATRDG3 - HARPER 138KV CKT 1'
13G	03ALL	'FROM->TO'	'ST JOHN - ST_JOHN 115KV CKT 1'	86	86	0.03723	131.5631	'FLATRDG3 - HARPER 138KV CKT 1'
13G	03ALL	'FROM->TO'	'ST JOHN - ST_JOHN 115KV CKT 1'	86	86	0.0409	131.5631	'FLATRDG3 - HARPER 138KV CKT 1'
13G	03ALL	'FROM->TO'	'ST JOHN - ST_JOHN 115KV CKT 1'	86	86	0.03512	131.5631	'FLATRDG3 - HARPER 138KV CKT 1'
13G	03ALL	'FROM->TO'	'FLATRDG3 - MEDICINE LODGE 138KV CKT 1'	96	96	1	105.8988	'FLATRDG3 - HARPER 138KV CKT 1'
13G	03ALL	'FROM->TO'	'MOUNDRIDGE (MOUND10X) 138/115/13.8KV TRANSFORMER CKT 1'	100	110	0.03307	100.3443	'FLATRDG3 - HARPER 138KV CKT 1'
13G	03ALL	'FROM->TO'	'MOUNDRIDGE (MOUND10X) 138/115/13.8KV TRANSFORMER CKT 1'	100	110	0.03861	100.3443	'FLATRDG3 - HARPER 138KV CKT 1'
13G	03ALL	'FROM->TO'	'MOUNDRIDGE (MOUND10X) 138/115/13.8KV TRANSFORMER CKT 1'	100	110	0.03204	100.3443	'FLATRDG3 - HARPER 138KV CKT 1'
13G	03ALL	'FROM->TO'	'MOUNDRIDGE (MOUND10X) 138/115/13.8KV TRANSFORMER CKT 1'	100	110	0.03006	100.3443	'FLATRDG3 - HARPER 138KV CKT 1'
13G	03ALL	'FROM->TO'	'MOUNDRIDGE (MOUND10X) 138/115/13.8KV TRANSFORMER CKT 1'	100	110	0.06608	100.3443	'FLATRDG3 - HARPER 138KV CKT 1'
13G	03ALL	'FROM->TO'	'MOUNDRIDGE (MOUND10X) 138/115/13.8KV TRANSFORMER CKT 1'	100	110	0.03006	100.3443	'FLATRDG3 - HARPER 138KV CKT 1'
13G	03ALL	'FROM->TO'	'MOUNDRIDGE (MOUND10X) 138/115/13.8KV TRANSFORMER CKT 1'	100	110	0.03717	100.3443	'FLATRDG3 - HARPER 138KV CKT 1'
13G	03ALL	'FROM->TO'	'MOUNDRIDGE (MOUND10X) 138/115/13.8KV TRANSFORMER CKT 1'	100	110	0.03649	100.3443	'FLATRDG3 - HARPER 138KV CKT 1'
13G	03ALL	'FROM->TO'	'MOUNDRIDGE (MOUND10X) 138/115/13.8KV TRANSFORMER CKT 1'	100	110	0.04584	100.3443	'FLATRDG3 - HARPER 138KV CKT 1'
13G	03ALL	'FROM->TO'	'MOUNDRIDGE (MOUND10X) 138/115/13.8KV TRANSFORMER CKT 1'	100	110	0.03307	100.037	'FLATRDG3 - HARPER 138KV CKT 1'
13G	03ALL	'FROM->TO'	'MOUNDRIDGE (MOUND10X) 138/115/13.8KV TRANSFORMER CKT 1'	100	110	0.03861	100.037	'FLATRDG3 - HARPER 138KV CKT 1'
13G	03ALL	'FROM->TO'	'MOUNDRIDGE (MOUND10X) 138/115/13.8KV TRANSFORMER CKT 1'	100	110	0.03204	100.037	'FLATRDG3 - HARPER 138KV CKT 1'
13G	03ALL	'FROM->TO'	'MOUNDRIDGE (MOUND10X) 138/115/13.8KV TRANSFORMER CKT 1'	100	110	0.03006	100.037	'FLATRDG3 - HARPER 138KV CKT 1'
13G	03ALL	'FROM->TO'	'MOUNDRIDGE (MOUND10X) 138/115/13.8KV TRANSFORMER CKT 1'	100	110	0.06608	100.037	'FLATRDG3 - HARPER 138KV CKT 1'
13G	03ALL	'FROM->TO'	'MOUNDRIDGE (MOUND10X) 138/115/13.8KV TRANSFORMER CKT 1'	100	110	0.03006	100.037	'FLATRDG3 - HARPER 138KV CKT 1'
13G	03ALL	'FROM->TO'	'MOUNDRIDGE (MOUND10X) 138/115/13.8KV TRANSFORMER CKT 1'	100	110	0.03717	100.037	'FLATRDG3 - HARPER 138KV CKT 1'

SEASON	GROUP	DIRECTION	MONITORED ELEMENT	RATE A (MVA)	RATE B (MVA)	TDF	TC%LOADING (%MVA)	CONTINGENCY NAME
13G	03ALL	'FROM->TO'	'MOUNDRIDGE (MOUND10X) 138/115/13.8KV TRANSFORMER CKT 1'	100	110	0.03649	100.037	'FLATRDG3 - HARPER 138KV CKT 1'
13G	03ALL	'FROM->TO'	'MOUNDRIDGE (MOUND10X) 138/115/13.8KV TRANSFORMER CKT 1'	100	110	0.04584	100.037	'FLATRDG3 - HARPER 138KV CKT 1'
13G	03ALL	'FROM->TO'	'SMOKYHL6 230.00 - SUMMIT 230KV CKT 1'	319	319	0.1894	106.9723	'FLATRDG3 - MEDICINE LODGE 138KV CKT 1'
13G	03ALL	'FROM->TO'	'SMOKYHL6 230.00 - SUMMIT 230KV CKT 1'	319	319	0.09662	106.9723	'FLATRDG3 - MEDICINE LODGE 138KV CKT 1'
13G	03ALL	'FROM->TO'	'SMOKYHL6 230.00 - SUMMIT 230KV CKT 1'	319	319	0.11518	106.9723	'FLATRDG3 - MEDICINE LODGE 138KV CKT 1'
13G	03ALL	'FROM->TO'	'SMOKYHL6 230.00 - SUMMIT 230KV CKT 1'	319	319	0.12757	106.9723	'FLATRDG3 - MEDICINE LODGE 138KV CKT 1'
13G	03ALL	'FROM->TO'	'SMOKYHL6 230.00 - SUMMIT 230KV CKT 1'	319	319	0.12757	106.9723	'FLATRDG3 - MEDICINE LODGE 138KV CKT 1'
13G	03ALL	'FROM->TO'	'SMOKYHL6 230.00 - SUMMIT 230KV CKT 1'	319	319	0.10116	106.9723	'FLATRDG3 - MEDICINE LODGE 138KV CKT 1'
13G	03ALL	'FROM->TO'	'SMOKYHL6 230.00 - SUMMIT 230KV CKT 1'	319	319	0.10403	106.9723	'FLATRDG3 - MEDICINE LODGE 138KV CKT 1'
13G	03ALL	'FROM->TO'	'SMOKYHL6 230.00 - SUMMIT 230KV CKT 1'	319	319	0.11941	106.9723	'FLATRDG3 - MEDICINE LODGE 138KV CKT 1'
13G	03ALL	'FROM->TO'	'SMOKYHL6 230.00 - SUMMIT 230KV CKT 1'	319	319	0.11941	106.9723	'FLATRDG3 - MEDICINE LODGE 138KV CKT 1'
13G	03ALL	'FROM->TO'	'SMOKYHL6 230.00 - SUMMIT 230KV CKT 1'	319	319	0.62817	106.9723	'FLATRDG3 - MEDICINE LODGE 138KV CKT 1'
13G	03ALL	'FROM->TO'	'SMOKYHL6 230.00 - SUMMIT 230KV CKT 1'	319	319	0.10397	106.9723	'FLATRDG3 - MEDICINE LODGE 138KV CKT 1'
13G	03ALL	'FROM->TO'	'SMOKYHL6 230.00 - SUMMIT 230KV CKT 1'	319	319	0.13209	106.9723	'FLATRDG3 - MEDICINE LODGE 138KV CKT 1'
13G	03ALL	'FROM->TO'	'SMOKYHL6 230.00 - SUMMIT 230KV CKT 1'	319	319	0.10657	106.9723	'FLATRDG3 - MEDICINE LODGE 138KV CKT 1'
13G	03ALL	'FROM->TO'	'ST JOHN - ST_JOHN 115KV CKT 1'	86	86	0.03692	100.1616	'FLATRDG3 - MEDICINE LODGE 138KV CKT 1'
13G	03ALL	'FROM->TO'	'ST JOHN - ST_JOHN 115KV CKT 1'	86	86	0.09576	100.1616	'FLATRDG3 - MEDICINE LODGE 138KV CKT 1'
13G	03ALL	'FROM->TO'	'ST JOHN - ST_JOHN 115KV CKT 1'	86	86	0.08418	100.1616	'FLATRDG3 - MEDICINE LODGE 138KV CKT 1'
13G	03ALL	'FROM->TO'	'ST JOHN - ST_JOHN 115KV CKT 1'	86	86	0.04613	100.1616	'FLATRDG3 - MEDICINE LODGE 138KV CKT 1'
13G	03ALL	'FROM->TO'	'ST JOHN - ST_JOHN 115KV CKT 1'	86	86	0.04613	100.1616	'FLATRDG3 - MEDICINE LODGE 138KV CKT 1'
13G	03ALL	'FROM->TO'	'ST JOHN - ST_JOHN 115KV CKT 1'	86	86	0.14951	100.1616	'FLATRDG3 - MEDICINE LODGE 138KV CKT 1'
13G	03ALL	'FROM->TO'	'ST JOHN - ST_JOHN 115KV CKT 1'	86	86	0.03819	100.1616	'FLATRDG3 - MEDICINE LODGE 138KV CKT 1'
13G	03ALL	'FROM->TO'	'ST JOHN - ST_JOHN 115KV CKT 1'	86	86	0.03804	100.1616	'FLATRDG3 - MEDICINE LODGE 138KV CKT 1'
13G	03ALL	'FROM->TO'	'ST JOHN - ST_JOHN 115KV CKT 1'	86	86	0.03804	100.1616	'FLATRDG3 - MEDICINE LODGE 138KV CKT 1'
13G	03ALL	'FROM->TO'	'ST JOHN - ST_JOHN 115KV CKT 1'	86	86	0.03723	100.1616	'FLATRDG3 - MEDICINE LODGE 138KV CKT 1'
13G	03ALL	'FROM->TO'	'ST JOHN - ST_JOHN 115KV CKT 1'	86	86	0.0409	100.1616	'FLATRDG3 - MEDICINE LODGE 138KV CKT 1'
13G	03ALL	'FROM->TO'	'ST JOHN - ST_JOHN 115KV CKT 1'	86	86	0.03512	100.1616	'FLATRDG3 - MEDICINE LODGE 138KV CKT 1'
13G	03ALL	'FROM->TO'	'SMOKYHL6 230.00 - SUMMIT 230KV CKT 1'	319	319	0.19049	101.7177	'CONCORDIA - ELM CREEK 230KV CKT 1'
13G	03ALL	'FROM->TO'	'SMOKYHL6 230.00 - SUMMIT 230KV CKT 1'	319	319	0.09527	101.7177	'CONCORDIA - ELM CREEK 230KV CKT 1'
13G	03ALL	'FROM->TO'	'SMOKYHL6 230.00 - SUMMIT 230KV CKT 1'	319	319	0.10718	101.7177	'CONCORDIA - ELM CREEK 230KV CKT 1'
13G	03ALL	'FROM->TO'	'SMOKYHL6 230.00 - SUMMIT 230KV CKT 1'	319	319	0.12655	101.7177	'CONCORDIA - ELM CREEK 230KV CKT 1'
13G	03ALL	'FROM->TO'	'SMOKYHL6 230.00 - SUMMIT 230KV CKT 1'	319	319	0.12655	101.7177	'CONCORDIA - ELM CREEK 230KV CKT 1'
13G	03ALL	'FROM->TO'	'SMOKYHL6 230.00 - SUMMIT 230KV CKT 1'	319	319	0.08134	101.7177	'CONCORDIA - ELM CREEK 230KV CKT 1'
13G	03ALL	'FROM->TO'	'SMOKYHL6 230.00 - SUMMIT 230KV CKT 1'	319	319	0.1043	101.7177	'CONCORDIA - ELM CREEK 230KV CKT 1'
13G	03ALL	'FROM->TO'	'SMOKYHL6 230.00 - SUMMIT 230KV CKT 1'	319	319	0.11925	101.7177	'CONCORDIA - ELM CREEK 230KV CKT 1'
13G	03ALL	'FROM->TO'	'SMOKYHL6 230.00 - SUMMIT 230KV CKT 1'	319	319	0.11925	101.7177	'CONCORDIA - ELM CREEK 230KV CKT 1'
13G	03ALL	'FROM->TO'	'SMOKYHL6 230.00 - SUMMIT 230KV CKT 1'	319	319	0.62741	101.7177	'CONCORDIA - ELM CREEK 230KV CKT 1'
13G	03ALL	'FROM->TO'	'SMOKYHL6 230.00 - SUMMIT 230KV CKT 1'	319	319	0.10444	101.7177	'CONCORDIA - ELM CREEK 230KV CKT 1'
13G	03ALL	'FROM->TO'	'SMOKYHL6 230.00 - SUMMIT 230KV CKT 1'	319	319	0.13168	101.7177	'CONCORDIA - ELM CREEK 230KV CKT 1'
13G	03ALL	'FROM->TO'	'SMOKYHL6 230.00 - SUMMIT 230KV CKT 1'	319	319	0.10667	101.7177	'CONCORDIA - ELM CREEK 230KV CKT 1'
13G	03ALL	'TO->FROM'	'CLEARWATER - MILAN TAP 138KV CKT 1'	110	110	0.03609	128.7635	'CIMARRON RIVER TAP - KISMET 3 115.00 115KV CKT 1
13G	03ALL	'TO->FROM'	'CLEARWATER - MILAN TAP 138KV CKT 1'	110	110	0.06243	128.7635	'CIMARRON RIVER TAP - KISMET 3 115.00 115KV CKT 1
13G	03ALL	'TO->FROM'	'CLEARWATER - MILAN TAP 138KV CKT 1'	110	110	0.12341	128.7635	'CIMARRON RIVER TAP - KISMET 3 115.00 115KV CKT 1
13G	03ALL	'TO->FROM'	'CLEARWATER - MILAN TAP 138KV CKT 1'	110	110	0.05025	128.7635	'CIMARRON RIVER TAP - KISMET 3 115.00 115KV CKT 1
13G	03ALL	'TO->FROM'	'CLEARWATER - MILAN TAP 138KV CKT 1'	110	110	0.05025	128.7635	'CIMARRON RIVER TAP - KISMET 3 115.00 115KV CKT 1
13G	03ALL	'TO->FROM'	'CLEARWATER - MILAN TAP 138KV CKT 1'	110	110	0.22157	128.7635	'CIMARRON RIVER TAP - KISMET 3 115.00 115KV CKT 1
13G	03ALL	'TO->FROM'	'CLEARWATER - MILAN TAP 138KV CKT 1'	110	110	0.03418	128.7635	'CIMARRON RIVER TAP - KISMET 3 115.00 115KV CKT 1
13G	03ALL	'TO->FROM'	'CLEARWATER - MILAN TAP 138KV CKT 1'	110	110	0.03862	128.7635	'CIMARRON RIVER TAP - KISMET 3 115.00 115KV CKT 1
13G	03ALL	'TO->FROM'	'CLEARWATER - MILAN TAP 138KV CKT 1'	110	110	0.03862	128.7635	'CIMARRON RIVER TAP - KISMET 3 115.00 115KV CKT 1
13G	03ALL	'TO->FROM'	'CLEARWATER - MILAN TAP 138KV CKT 1'	110	110	0.53074	128.7635	'CIMARRON RIVER TAP - KISMET 3 115.00 115KV CKT 1
13G	03ALL	'TO->FROM'	'CLEARWATER - MILAN TAP 138KV CKT 1'	110	110	0.03348	128.7635	'CIMARRON RIVER TAP - KISMET 3 115.00 115KV CKT 1
13G	03ALL	'TO->FROM'	'CLEARWATER - MILAN TAP 138KV CKT 1'	110	110	0.04329	128.7635	'CIMARRON RIVER TAP - KISMET 3 115.00 115KV CKT 1
13G	03ALL	'TO->FROM'	'CLEARWATER - MILAN TAP 138KV CKT 1'	110	110	0.03389	128.7635	'CIMARRON RIVER TAP - KISMET 3 115.00 115KV CKT 1
13G	03ALL	'FROM->TO'	'GREENSBURG - SUN CITY 115KV CKT 1'	120.7	129.5	0.20786	111.5431	'CIMARRON RIVER TAP - KISMET 3 115.00 115KV CKT 1
13G	03ALL	'FROM->TO'	'GREENSBURG - SUN CITY 115KV CKT 1'	120.7	129.5	0.0484	111.5431	'CIMARRON RIVER TAP - KISMET 3 115.00 115KV CKT 1
13G	03ALL	'FROM->TO'	'GREENSBURG - SUN CITY 115KV CKT 1'	120.7	129.5	0.0484	111.5431	'CIMARRON RIVER TAP - KISMET 3 115.00 115KV CKT 1
13G	03ALL	'FROM->TO'	'GREENSBURG - SUN CITY 115KV CKT 1'	120.7	129.5	0.42177	111.5431	'CIMARRON RIVER TAP - KISMET 3 115.00 115KV CKT 1
13G	03ALL	'FROM->TO'	'GREENSBURG - SUN CITY 115KV CKT 1'	120.7	129.5	0.03253	111.5431	'CIMARRON RIVER TAP - KISMET 3 115.00 115KV CKT 1
13G	03ALL	'FROM->TO'	'GREENSBURG - SUN CITY 115KV CKT 1'	120.7	129.5	0.03253	111.5431	'CIMARRON RIVER TAP - KISMET 3 115.00 115KV CKT 1
13G	03ALL	'FROM->TO'	'GREENSBURG - SUN CITY 115KV CKT 1'	120.7	129.5	0.03819	111.5431	'CIMARRON RIVER TAP - KISMET 3 115.00 115KV CKT 1
13G	03ALL	'TO->FROM'	'GREENSBURG - SSTARTP3 115.00 115KV CKT 1	120.7	129.5	0.20786	119.433	'CIMARRON RIVER TAP - KISMET 3 115.00 115KV CKT 1
13G	03ALL	'TO->FROM'	'GREENSBURG - SSTARTP3 115.00 115KV CKT 1	120.7	129.5	0.0484	119.433	'CIMARRON RIVER TAP - KISMET 3 115.00 115KV CKT 1
13G	03ALL	'TO->FROM'	'GREENSBURG - SSTARTP3 115.00 115KV CKT 1	120.7	129.5	0.0484	119.433	'CIMARRON RIVER TAP - KISMET 3 115.00 115KV CKT 1
13G	03ALL	'TO->FROM'	'GREENSBURG - SSTARTP3 115.00 115KV CKT 1	120.7	129.5	0.42177	119.433	'CIMARRON RIVER TAP - KISMET 3 115.00 115KV CKT 1

SEASON	GROUP	DIRECTION	MONITORED ELEMENT	RATE A (MVA)	RATE B (MVA)	TDF	TC%LOADING (%MVA)	CONTINGENCY NAME
13G	03ALL	'TO->FROM'	'GREENSBURG - SSTARTP3 115.00 115KV CKT 1	120.7	129.5	0.03253	119.433	'CIMARRON RIVER TAP - KISMET 3 115.00 115KV CKT 1
13G	03ALL	'TO->FROM'	'GREENSBURG - SSTARTP3 115.00 115KV CKT 1	120.7	129.5	0.03253	119.433	'CIMARRON RIVER TAP - KISMET 3 115.00 115KV CKT 1
13G	03ALL	'TO->FROM'	'GREENSBURG - SSTARTP3 115.00 115KV CKT 1	120.7	129.5	0.03819	119.433	'CIMARRON RIVER TAP - KISMET 3 115.00 115KV CKT 1
13G	03ALL	'FROM->TO'	'HARPER - MILAN TAP 138KV CKT 1'	95.6	95.6	0.03609	155.4256	'CIMARRON RIVER TAP - KISMET 3 115.00 115KV CKT 1
13G	03ALL	'FROM->TO'	'HARPER - MILAN TAP 138KV CKT 1'	95.6	95.6	0.06243	155.4256	'CIMARRON RIVER TAP - KISMET 3 115.00 115KV CKT 1
13G	03ALL	'FROM->TO'	'HARPER - MILAN TAP 138KV CKT 1'	95.6	95.6	0.12341	155.4256	'CIMARRON RIVER TAP - KISMET 3 115.00 115KV CKT 1
13G	03ALL	'FROM->TO'	'HARPER - MILAN TAP 138KV CKT 1'	95.6	95.6	0.05025	155.4256	'CIMARRON RIVER TAP - KISMET 3 115.00 115KV CKT 1
13G	03ALL	'FROM->TO'	'HARPER - MILAN TAP 138KV CKT 1'	95.6	95.6	0.05025	155.4256	'CIMARRON RIVER TAP - KISMET 3 115.00 115KV CKT 1
13G	03ALL	'FROM->TO'	'HARPER - MILAN TAP 138KV CKT 1'	95.6	95.6	0.22157	155.4256	'CIMARRON RIVER TAP - KISMET 3 115.00 115KV CKT 1
13G	03ALL	'FROM->TO'	'HARPER - MILAN TAP 138KV CKT 1'	95.6	95.6	0.03418	155.4256	'CIMARRON RIVER TAP - KISMET 3 115.00 115KV CKT 1
13G	03ALL	'FROM->TO'	'HARPER - MILAN TAP 138KV CKT 1'	95.6	95.6	0.03862	155.4256	'CIMARRON RIVER TAP - KISMET 3 115.00 115KV CKT 1
13G	03ALL	'FROM->TO'	'HARPER - MILAN TAP 138KV CKT 1'	95.6	95.6	0.03862	155.4256	'CIMARRON RIVER TAP - KISMET 3 115.00 115KV CKT 1
13G	03ALL	'FROM->TO'	'HARPER - MILAN TAP 138KV CKT 1'	95.6	95.6	0.53074	155.4256	'CIMARRON RIVER TAP - KISMET 3 115.00 115KV CKT 1
13G	03ALL	'FROM->TO'	'HARPER - MILAN TAP 138KV CKT 1'	95.6	95.6	0.03348	155.4256	'CIMARRON RIVER TAP - KISMET 3 115.00 115KV CKT 1
13G	03ALL	'FROM->TO'	'HARPER - MILAN TAP 138KV CKT 1'	95.6	95.6	0.04329	155.4256	'CIMARRON RIVER TAP - KISMET 3 115.00 115KV CKT 1
13G	03ALL	'FROM->TO'	'HARPER - MILAN TAP 138KV CKT 1'	95.6	95.6	0.03389	155.4256	'CIMARRON RIVER TAP - KISMET 3 115.00 115KV CKT 1
13G	03ALL	'TO->FROM'	'MEDICINE LODGE - SUN CITY 115KV CKT 1'	120.7	129.5	0.20786	108.9481	'CIMARRON RIVER TAP - KISMET 3 115.00 115KV CKT 1
13G	03ALL	'TO->FROM'	'MEDICINE LODGE - SUN CITY 115KV CKT 1'	120.7	129.5	0.0484	108.9481	'CIMARRON RIVER TAP - KISMET 3 115.00 115KV CKT 1
13G	03ALL	'TO->FROM'	'MEDICINE LODGE - SUN CITY 115KV CKT 1'	120.7	129.5	0.0484	108.9481	'CIMARRON RIVER TAP - KISMET 3 115.00 115KV CKT 1
13G	03ALL	'TO->FROM'	'MEDICINE LODGE - SUN CITY 115KV CKT 1'	120.7	129.5	0.42177	108.9481	'CIMARRON RIVER TAP - KISMET 3 115.00 115KV CKT 1
13G	03ALL	'TO->FROM'	'MEDICINE LODGE - SUN CITY 115KV CKT 1'	120.7	129.5	0.03253	108.9481	'CIMARRON RIVER TAP - KISMET 3 115.00 115KV CKT 1
13G	03ALL	'TO->FROM'	'MEDICINE LODGE - SUN CITY 115KV CKT 1'	120.7	129.5	0.03253	108.9481	'CIMARRON RIVER TAP - KISMET 3 115.00 115KV CKT 1
13G	03ALL	'TO->FROM'	'MEDICINE LODGE - SUN CITY 115KV CKT 1'	120.7	129.5	0.03819	108.9481	'CIMARRON RIVER TAP - KISMET 3 115.00 115KV CKT 1
13G	03ALL	'TO->FROM'	'BARBER 3 115.00 - MEDICINE LODGE 115KV CKT 1'	79.7	79.7	0.13491	107.8126	'CIMARRON RIVER TAP - KISMET 3 115.00 115KV CKT 1
13G	03ALL	'TO->FROM'	'BARBER 3 115.00 - MEDICINE LODGE 115KV CKT 1'	79.7	79.7	0.03716	107.8126	'CIMARRON RIVER TAP - KISMET 3 115.00 115KV CKT 1
13G	03ALL	'TO->FROM'	'BARBER 3 115.00 - MEDICINE LODGE 115KV CKT 1'	79.7	79.7	0.03716	107.8126	'CIMARRON RIVER TAP - KISMET 3 115.00 115KV CKT 1
13G	03ALL	'TO->FROM'	'BARBER 3 115.00 - MEDICINE LODGE 115KV CKT 1'	79.7	79.7	0.26603	107.8126	'CIMARRON RIVER TAP - KISMET 3 115.00 115KV CKT 1
13G	03ALL	'TO->FROM'	'BARBER 3 115.00 - MEDICINE LODGE 115KV CKT 1'	79.7	79.7	0.03029	107.8126	'CIMARRON RIVER TAP - KISMET 3 115.00 115KV CKT 1
13G	03ALL	'FROM->TO'	'NORTH JUDSON LARGE SUB - SPEARVILLE 115KV CKT 1'	165.1	177.7	0.78385	108.5501	'CIMARRON RIVER TAP - KISMET 3 115.00 115KV CKT 1
13G	03ALL	'FROM->TO'	'NORTH JUDSON LARGE SUB - SPEARVILLE 115KV CKT 1'	165.1	177.7	0.56994	108.5501	'CIMARRON RIVER TAP - KISMET 3 115.00 115KV CKT 1
13G	03ALL	'FROM->TO'	'NORTH JUDSON LARGE SUB - SPEARVILLE 115KV CKT 1'	165.1	177.7	0.16059	108.5501	'CIMARRON RIVER TAP - KISMET 3 115.00 115KV CKT 1
13G	03ALL	'TO->FROM'	'CLEARWATER - MILAN TAP 138KV CKT 1'	110	110	0.03609	128.8853	'CUDAHY - KISMET 3 115.00 115KV CKT 1'
13G	03ALL	'TO->FROM'	'CLEARWATER - MILAN TAP 138KV CKT 1'	110	110	0.06243	128.8853	'CUDAHY - KISMET 3 115.00 115KV CKT 1'
13G	03ALL	'TO->FROM'	'CLEARWATER - MILAN TAP 138KV CKT 1'	110	110	0.12341	128.8853	'CUDAHY - KISMET 3 115.00 115KV CKT 1'
13G	03ALL	'TO->FROM'	'CLEARWATER - MILAN TAP 138KV CKT 1'	110	110	0.05025	128.8853	'CUDAHY - KISMET 3 115.00 115KV CKT 1'
13G	03ALL	'TO->FROM'	'CLEARWATER - MILAN TAP 138KV CKT 1'	110	110	0.05025	128.8853	'CUDAHY - KISMET 3 115.00 115KV CKT 1'
13G	03ALL	'TO->FROM'	'CLEARWATER - MILAN TAP 138KV CKT 1'	110	110	0.22157	128.8853	'CUDAHY - KISMET 3 115.00 115KV CKT 1'
13G	03ALL	'TO->FROM'	'CLEARWATER - MILAN TAP 138KV CKT 1'	110	110	0.03418	128.8853	'CUDAHY - KISMET 3 115.00 115KV CKT 1'
13G	03ALL	'TO->FROM'	'CLEARWATER - MILAN TAP 138KV CKT 1'	110	110	0.03862	128.8853	'CUDAHY - KISMET 3 115.00 115KV CKT 1'
13G	03ALL	'TO->FROM'	'CLEARWATER - MILAN TAP 138KV CKT 1'	110	110	0.03862	128.8853	'CUDAHY - KISMET 3 115.00 115KV CKT 1'
13G	03ALL	'TO->FROM'	'CLEARWATER - MILAN TAP 138KV CKT 1'	110	110	0.53074	128.8853	'CUDAHY - KISMET 3 115.00 115KV CKT 1'
13G	03ALL	'TO->FROM'	'CLEARWATER - MILAN TAP 138KV CKT 1'	110	110	0.03348	128.8853	'CUDAHY - KISMET 3 115.00 115KV CKT 1'
13G	03ALL	'TO->FROM'	'CLEARWATER - MILAN TAP 138KV CKT 1'	110	110	0.04329	128.8853	'CUDAHY - KISMET 3 115.00 115KV CKT 1'
13G	03ALL	'TO->FROM'	'CLEARWATER - MILAN TAP 138KV CKT 1'	110	110	0.03389	128.8853	'CUDAHY - KISMET 3 115.00 115KV CKT 1'
13G	03ALL	'FROM->TO'	'GREENSBURG - SUN CITY 115KV CKT 1'	120.7	129.5	0.20786	111.8221	'CUDAHY - KISMET 3 115.00 115KV CKT 1'
13G	03ALL	'FROM->TO'	'GREENSBURG - SUN CITY 115KV CKT 1'	120.7	129.5	0.0484	111.8221	'CUDAHY - KISMET 3 115.00 115KV CKT 1'
13G	03ALL	'FROM->TO'	'GREENSBURG - SUN CITY 115KV CKT 1'	120.7	129.5	0.0484	111.8221	'CUDAHY - KISMET 3 115.00 115KV CKT 1'
13G	03ALL	'FROM->TO'	'GREENSBURG - SUN CITY 115KV CKT 1'	120.7	129.5	0.42177	111.8221	'CUDAHY - KISMET 3 115.00 115KV CKT 1'
13G	03ALL	'FROM->TO'	'GREENSBURG - SUN CITY 115KV CKT 1'	120.7	129.5	0.03253	111.8221	'CUDAHY - KISMET 3 115.00 115KV CKT 1'
13G	03ALL	'FROM->TO'	'GREENSBURG - SUN CITY 115KV CKT 1'	120.7	129.5	0.03253	111.8221	'CUDAHY - KISMET 3 115.00 115KV CKT 1'
13G	03ALL	'FROM->TO'	'GREENSBURG - SUN CITY 115KV CKT 1'	120.7	129.5	0.03819	111.8221	'CUDAHY - KISMET 3 115.00 115KV CKT 1'
13G	03ALL	'TO->FROM'	'GREENSBURG - SSTARTP3 115.00 115KV CKT 1	120.7	129.5	0.20786	119.7144	'CUDAHY - KISMET 3 115.00 115KV CKT 1'
13G	03ALL	'TO->FROM'	'GREENSBURG - SSTARTP3 115.00 115KV CKT 1	120.7	129.5	0.0484	119.7144	'CUDAHY - KISMET 3 115.00 115KV CKT 1'
13G	03ALL	'TO->FROM'	'GREENSBURG - SSTARTP3 115.00 115KV CKT 1	120.7	129.5	0.0484	119.7144	'CUDAHY - KISMET 3 115.00 115KV CKT 1'
13G	03ALL	'TO->FROM'	'GREENSBURG - SSTARTP3 115.00 115KV CKT 1	120.7	129.5	0.42177	119.7144	'CUDAHY - KISMET 3 115.00 115KV CKT 1'
13G	03ALL	'TO->FROM'	'GREENSBURG - SSTARTP3 115.00 115KV CKT 1	120.7	129.5	0.03253	119.7144	'CUDAHY - KISMET 3 115.00 115KV CKT 1'
13G	03ALL	'TO->FROM'	'GREENSBURG - SSTARTP3 115.00 115KV CKT 1	120.7	129.5	0.03253	119.7144	'CUDAHY - KISMET 3 115.00 115KV CKT 1'
13G	03ALL	'TO->FROM'	'GREENSBURG - SSTARTP3 115.00 115KV CKT 1	120.7	129.5	0.03819	119.7144	'CUDAHY - KISMET 3 115.00 115KV CKT 1'
13G	03ALL	'FROM->TO'	'HARPER - MILAN TAP 138KV CKT 1'	95.6	95.6	0.03609	155.5636	'CUDAHY - KISMET 3 115.00 115KV CKT 1'
13G	03ALL	'FROM->TO'	'HARPER - MILAN TAP 138KV CKT 1'	95.6	95.6	0.06243	155.5636	'CUDAHY - KISMET 3 115.00 115KV CKT 1'
13G	03ALL	'FROM->TO'	'HARPER - MILAN TAP 138KV CKT 1'	95.6	95.6	0.12341	155.5636	'CUDAHY - KISMET 3 115.00 115KV CKT 1'
13G	03ALL	'FROM->TO'	'HARPER - MILAN TAP 138KV CKT 1'	95.6	95.6	0.05025	155.5636	'CUDAHY - KISMET 3 115.00 115KV CKT 1'
13G	03ALL	'FROM->TO'	'HARPER - MILAN TAP 138KV CKT 1'	95.6	95.6	0.05025	155.5636	'CUDAHY - KISMET 3 115.00 115KV CKT 1'
13G	03ALL	'FROM->TO'	'HARPER - MILAN TAP 138KV CKT 1'	95.6	95.6	0.22157	155.5636	'CUDAHY - KISMET 3 115.00 115KV CKT 1'

SEASON	GROUP	DIRECTION	MONITORED ELEMENT	RATE A (MVA)	RATE B (MVA)	TDF	TC%LOADING (%MVA)	CONTINGENCY NAME
13G	03ALL	'FROM->TO'	'HARPER - MILAN TAP 138KV CKT 1'	95.6	95.6	0.03418	155.5636	'CUDAHY - KISMET 3 115.00 115KV CKT 1'
13G	03ALL	'FROM->TO'	'HARPER - MILAN TAP 138KV CKT 1'	95.6	95.6	0.03862	155.5636	'CUDAHY - KISMET 3 115.00 115KV CKT 1'
13G	03ALL	'FROM->TO'	'HARPER - MILAN TAP 138KV CKT 1'	95.6	95.6	0.03862	155.5636	'CUDAHY - KISMET 3 115.00 115KV CKT 1'
13G	03ALL	'FROM->TO'	'HARPER - MILAN TAP 138KV CKT 1'	95.6	95.6	0.53074	155.5636	'CUDAHY - KISMET 3 115.00 115KV CKT 1'
13G	03ALL	'FROM->TO'	'HARPER - MILAN TAP 138KV CKT 1'	95.6	95.6	0.03348	155.5636	'CUDAHY - KISMET 3 115.00 115KV CKT 1'
13G	03ALL	'FROM->TO'	'HARPER - MILAN TAP 138KV CKT 1'	95.6	95.6	0.04329	155.5636	'CUDAHY - KISMET 3 115.00 115KV CKT 1'
13G	03ALL	'FROM->TO'	'HARPER - MILAN TAP 138KV CKT 1'	95.6	95.6	0.03389	155.5636	'CUDAHY - KISMET 3 115.00 115KV CKT 1'
13G	03ALL	'TO->FROM'	'MEDICINE LODGE - SUN CITY 115KV CKT 1'	120.7	129.5	0.20786	109.2264	'CUDAHY - KISMET 3 115.00 115KV CKT 1'
13G	03ALL	'TO->FROM'	'MEDICINE LODGE - SUN CITY 115KV CKT 1'	120.7	129.5	0.0484	109.2264	'CUDAHY - KISMET 3 115.00 115KV CKT 1'
13G	03ALL	'TO->FROM'	'MEDICINE LODGE - SUN CITY 115KV CKT 1'	120.7	129.5	0.0484	109.2264	'CUDAHY - KISMET 3 115.00 115KV CKT 1'
13G	03ALL	'TO->FROM'	'MEDICINE LODGE - SUN CITY 115KV CKT 1'	120.7	129.5	0.42177	109.2264	'CUDAHY - KISMET 3 115.00 115KV CKT 1'
13G	03ALL	'TO->FROM'	'MEDICINE LODGE - SUN CITY 115KV CKT 1'	120.7	129.5	0.03253	109.2264	'CUDAHY - KISMET 3 115.00 115KV CKT 1'
13G	03ALL	'TO->FROM'	'MEDICINE LODGE - SUN CITY 115KV CKT 1'	120.7	129.5	0.03253	109.2264	'CUDAHY - KISMET 3 115.00 115KV CKT 1'
13G	03ALL	'TO->FROM'	'MEDICINE LODGE - SUN CITY 115KV CKT 1'	120.7	129.5	0.03819	109.2264	'CUDAHY - KISMET 3 115.00 115KV CKT 1'
13G	03ALL	'TO->FROM'	'BARBER 3 115.00 - MEDICINE LODGE 115KV CKT 1'	79.7	79.7	0.13491	108.101	'CUDAHY - KISMET 3 115.00 115KV CKT 1'
13G	03ALL	'TO->FROM'	'BARBER 3 115.00 - MEDICINE LODGE 115KV CKT 1'	79.7	79.7	0.03716	108.101	'CUDAHY - KISMET 3 115.00 115KV CKT 1'
13G	03ALL	'TO->FROM'	'BARBER 3 115.00 - MEDICINE LODGE 115KV CKT 1'	79.7	79.7	0.03716	108.101	'CUDAHY - KISMET 3 115.00 115KV CKT 1'
13G	03ALL	'TO->FROM'	'BARBER 3 115.00 - MEDICINE LODGE 115KV CKT 1'	79.7	79.7	0.26603	108.101	'CUDAHY - KISMET 3 115.00 115KV CKT 1'
13G	03ALL	'TO->FROM'	'BARBER 3 115.00 - MEDICINE LODGE 115KV CKT 1'	79.7	79.7	0.03029	108.101	'CUDAHY - KISMET 3 115.00 115KV CKT 1'
13G	03ALL	'FROM->TO'	'NORTH JUDSON LARGE SUB - SPEARVILLE 115KV CKT 1'	165.1	177.7	0.78385	109.4737	'CUDAHY - KISMET 3 115.00 115KV CKT 1'
13G	03ALL	'FROM->TO'	'NORTH JUDSON LARGE SUB - SPEARVILLE 115KV CKT 1'	165.1	177.7	0.56994	109.4737	'CUDAHY - KISMET 3 115.00 115KV CKT 1'
13G	03ALL	'FROM->TO'	'NORTH JUDSON LARGE SUB - SPEARVILLE 115KV CKT 1'	165.1	177.7	0.16059	109.4737	'CUDAHY - KISMET 3 115.00 115KV CKT 1'
13G	03ALL	'TO->FROM'	'CLEARWATER - MILAN TAP 138KV CKT 1'	110	110	0.15015	133.2109	'ALEXANDER - NINNESC3 115.00 115KV CKT 1
13G	03ALL	'TO->FROM'	'CLEARWATER - MILAN TAP 138KV CKT 1'	110	110	0.0462	133.2109	'ALEXANDER - NINNESC3 115.00 115KV CKT 1
13G	03ALL	'TO->FROM'	'CLEARWATER - MILAN TAP 138KV CKT 1'	110	110	0.0462	133.2109	'ALEXANDER - NINNESC3 115.00 115KV CKT 1
13G	03ALL	'TO->FROM'	'CLEARWATER - MILAN TAP 138KV CKT 1'	110	110	0.32421	133.2109	'ALEXANDER - NINNESC3 115.00 115KV CKT 1
13G	03ALL	'TO->FROM'	'CLEARWATER - MILAN TAP 138KV CKT 1'	110	110	0.03293	133.2109	'ALEXANDER - NINNESC3 115.00 115KV CKT 1
13G	03ALL	'TO->FROM'	'CLEARWATER - MILAN TAP 138KV CKT 1'	110	110	0.03621	133.2109	'ALEXANDER - NINNESC3 115.00 115KV CKT 1
13G	03ALL	'TO->FROM'	'CLEARWATER - MILAN TAP 138KV CKT 1'	110	110	0.03621	133.2109	'ALEXANDER - NINNESC3 115.00 115KV CKT 1
13G	03ALL	'TO->FROM'	'CLEARWATER - MILAN TAP 138KV CKT 1'	110	110	0.70629	133.2109	'ALEXANDER - NINNESC3 115.00 115KV CKT 1
13G	03ALL	'TO->FROM'	'CLEARWATER - MILAN TAP 138KV CKT 1'	110	110	0.03274	133.2109	'ALEXANDER - NINNESC3 115.00 115KV CKT 1
13G	03ALL	'TO->FROM'	'CLEARWATER - MILAN TAP 138KV CKT 1'	110	110	0.03919	133.2109	'ALEXANDER - NINNESC3 115.00 115KV CKT 1
13G	03ALL	'TO->FROM'	'CLEARWATER - MILAN TAP 138KV CKT 1'	110	110	0.03317	133.2109	'ALEXANDER - NINNESC3 115.00 115KV CKT 1
13G	03ALL	'TO->FROM'	'GREENSBURG - SSTARTP3 115.00 115KV CKT 1	120.7	129.5	0.15015	100.981	'ALEXANDER - NINNESC3 115.00 115KV CKT 1
13G	03ALL	'TO->FROM'	'GREENSBURG - SSTARTP3 115.00 115KV CKT 1	120.7	129.5	0.0462	100.981	'ALEXANDER - NINNESC3 115.00 115KV CKT 1
13G	03ALL	'TO->FROM'	'GREENSBURG - SSTARTP3 115.00 115KV CKT 1	120.7	129.5	0.0462	100.981	'ALEXANDER - NINNESC3 115.00 115KV CKT 1
13G	03ALL	'TO->FROM'	'GREENSBURG - SSTARTP3 115.00 115KV CKT 1	120.7	129.5	0.32421	100.981	'ALEXANDER - NINNESC3 115.00 115KV CKT 1
13G	03ALL	'TO->FROM'	'GREENSBURG - SSTARTP3 115.00 115KV CKT 1	120.7	129.5	0.03293	100.981	'ALEXANDER - NINNESC3 115.00 115KV CKT 1
13G	03ALL	'TO->FROM'	'GREENSBURG - SSTARTP3 115.00 115KV CKT 1	120.7	129.5	0.03621	100.981	'ALEXANDER - NINNESC3 115.00 115KV CKT 1
13G	03ALL	'TO->FROM'	'GREENSBURG - SSTARTP3 115.00 115KV CKT 1	120.7	129.5	0.03621	100.981	'ALEXANDER - NINNESC3 115.00 115KV CKT 1
13G	03ALL	'TO->FROM'	'GREENSBURG - SSTARTP3 115.00 115KV CKT 1	120.7	129.5	0.03274	100.981	'ALEXANDER - NINNESC3 115.00 115KV CKT 1
13G	03ALL	'TO->FROM'	'GREENSBURG - SSTARTP3 115.00 115KV CKT 1	120.7	129.5	0.03919	100.981	'ALEXANDER - NINNESC3 115.00 115KV CKT 1
13G	03ALL	'TO->FROM'	'GREENSBURG - SSTARTP3 115.00 115KV CKT 1	120.7	129.5	0.03317	100.981	'ALEXANDER - NINNESC3 115.00 115KV CKT 1
13G	03ALL	'FROM->TO'	'HARPER - MILAN TAP 138KV CKT 1'	95.6	95.6	0.15015	160.4984	'ALEXANDER - NINNESC3 115.00 115KV CKT 1
13G	03ALL	'FROM->TO'	'HARPER - MILAN TAP 138KV CKT 1'	95.6	95.6	0.0462	160.4984	'ALEXANDER - NINNESC3 115.00 115KV CKT 1
13G	03ALL	'FROM->TO'	'HARPER - MILAN TAP 138KV CKT 1'	95.6	95.6	0.0462	160.4984	'ALEXANDER - NINNESC3 115.00 115KV CKT 1
13G	03ALL	'FROM->TO'	'HARPER - MILAN TAP 138KV CKT 1'	95.6	95.6	0.32421	160.4984	'ALEXANDER - NINNESC3 115.00 115KV CKT 1
13G	03ALL	'FROM->TO'	'HARPER - MILAN TAP 138KV CKT 1'	95.6	95.6	0.03293	160.4984	'ALEXANDER - NINNESC3 115.00 115KV CKT 1
13G	03ALL	'FROM->TO'	'HARPER - MILAN TAP 138KV CKT 1'	95.6	95.6	0.03621	160.4984	'ALEXANDER - NINNESC3 115.00 115KV CKT 1
13G	03ALL	'FROM->TO'	'HARPER - MILAN TAP 138KV CKT 1'	95.6	95.6	0.03621	160.4984	'ALEXANDER - NINNESC3 115.00 115KV CKT 1
13G	03ALL	'FROM->TO'	'HARPER - MILAN TAP 138KV CKT 1'	95.6	95.6	0.70629	160.4984	'ALEXANDER - NINNESC3 115.00 115KV CKT 1
13G	03ALL	'FROM->TO'	'HARPER - MILAN TAP 138KV CKT 1'	95.6	95.6	0.03274	160.4984	'ALEXANDER - NINNESC3 115.00 115KV CKT 1
13G	03ALL	'FROM->TO'	'HARPER - MILAN TAP 138KV CKT 1'	95.6	95.6	0.03919	160.4984	'ALEXANDER - NINNESC3 115.00 115KV CKT 1
13G	03ALL	'FROM->TO'	'HARPER - MILAN TAP 138KV CKT 1'	95.6	95.6	0.03317	160.4984	'ALEXANDER - NINNESC3 115.00 115KV CKT 1
13G	03ALL	'TO->FROM'	'CLEARWATER - MILAN TAP 138KV CKT 1'	110	110	0.15015	129.0952	'NINNESC3 115.00 - ST JOHN 115KV CKT 1
13G	03ALL	'TO->FROM'	'CLEARWATER - MILAN TAP 138KV CKT 1'	110	110	0.0462	129.0952	'NINNESC3 115.00 - ST JOHN 115KV CKT 1
13G	03ALL	'TO->FROM'	'CLEARWATER - MILAN TAP 138KV CKT 1'	110	110	0.0462	129.0952	'NINNESC3 115.00 - ST JOHN 115KV CKT 1
13G	03ALL	'TO->FROM'	'CLEARWATER - MILAN TAP 138KV CKT 1'	110	110	0.32421	129.0952	'NINNESC3 115.00 - ST JOHN 115KV CKT 1
13G	03ALL	'TO->FROM'	'CLEARWATER - MILAN TAP 138KV CKT 1'	110	110	0.03293	129.0952	'NINNESC3 115.00 - ST JOHN 115KV CKT 1
13G	03ALL	'TO->FROM'	'CLEARWATER - MILAN TAP 138KV CKT 1'	110	110	0.03621	129.0952	'NINNESC3 115.00 - ST JOHN 115KV CKT 1
13G	03ALL	'TO->FROM'	'CLEARWATER - MILAN TAP 138KV CKT 1'	110	110	0.03621	129.0952	'NINNESC3 115.00 - ST JOHN 115KV CKT 1
13G	03ALL	'TO->FROM'	'CLEARWATER - MILAN TAP 138KV CKT 1'	110	110	0.70629	129.0952	'NINNESC3 115.00 - ST JOHN 115KV CKT 1
13G	03ALL	'TO->FROM'	'CLEARWATER - MILAN TAP 138KV CKT 1'	110	110	0.03274	129.0952	'NINNESC3 115.00 - ST JOHN 115KV CKT 1
13G	03ALL	'TO->FROM'	'CLEARWATER - MILAN TAP 138KV CKT 1'	110	110	0.03919	129.0952	'NINNESC3 115.00 - ST JOHN 115KV CKT 1

SEASON	GROUP	DIRECTION	MONITORED ELEMENT	RATE A (MVA)	RATE B (MVA)	TDF	TC%LOADING (%MVA)	CONTINGENCY NAME
13G	03ALL	'TO->FROM'	'CLEARWATER - MILAN TAP 138KV CKT 1'	110	110	0.03317	129.0952	'NINNESC3 115.00 - ST JOHN 115KV CKT 1
13G	03ALL	'TO->FROM'	'GREENSBURG - SSTARTP3 115.00 115KV CKT 1	120.7	129.5	0.15015	102.903	'NINNESC3 115.00 - ST JOHN 115KV CKT 1
13G	03ALL	'TO->FROM'	'GREENSBURG - SSTARTP3 115.00 115KV CKT 1	120.7	129.5	0.0462	102.903	'NINNESC3 115.00 - ST JOHN 115KV CKT 1
13G	03ALL	'TO->FROM'	'GREENSBURG - SSTARTP3 115.00 115KV CKT 1	120.7	129.5	0.0462	102.903	'NINNESC3 115.00 - ST JOHN 115KV CKT 1
13G	03ALL	'TO->FROM'	'GREENSBURG - SSTARTP3 115.00 115KV CKT 1	120.7	129.5	0.32421	102.903	'NINNESC3 115.00 - ST JOHN 115KV CKT 1
13G	03ALL	'TO->FROM'	'GREENSBURG - SSTARTP3 115.00 115KV CKT 1	120.7	129.5	0.03293	102.903	'NINNESC3 115.00 - ST JOHN 115KV CKT 1
13G	03ALL	'TO->FROM'	'GREENSBURG - SSTARTP3 115.00 115KV CKT 1	120.7	129.5	0.03621	102.903	'NINNESC3 115.00 - ST JOHN 115KV CKT 1
13G	03ALL	'TO->FROM'	'GREENSBURG - SSTARTP3 115.00 115KV CKT 1	120.7	129.5	0.03621	102.903	'NINNESC3 115.00 - ST JOHN 115KV CKT 1
13G	03ALL	'TO->FROM'	'GREENSBURG - SSTARTP3 115.00 115KV CKT 1	120.7	129.5	0.03274	102.903	'NINNESC3 115.00 - ST JOHN 115KV CKT 1
13G	03ALL	'TO->FROM'	'GREENSBURG - SSTARTP3 115.00 115KV CKT 1	120.7	129.5	0.03919	102.903	'NINNESC3 115.00 - ST JOHN 115KV CKT 1
13G	03ALL	'TO->FROM'	'GREENSBURG - SSTARTP3 115.00 115KV CKT 1	120.7	129.5	0.03317	102.903	'NINNESC3 115.00 - ST JOHN 115KV CKT 1
13G	03ALL	'FROM->TO'	'HARPER - MILAN TAP 138KV CKT 1'	95.6	95.6	0.15015	155.7121	'NINNESC3 115.00 - ST JOHN 115KV CKT 1
13G	03ALL	'FROM->TO'	'HARPER - MILAN TAP 138KV CKT 1'	95.6	95.6	0.0462	155.7121	'NINNESC3 115.00 - ST JOHN 115KV CKT 1
13G	03ALL	'FROM->TO'	'HARPER - MILAN TAP 138KV CKT 1'	95.6	95.6	0.0462	155.7121	'NINNESC3 115.00 - ST JOHN 115KV CKT 1
13G	03ALL	'FROM->TO'	'HARPER - MILAN TAP 138KV CKT 1'	95.6	95.6	0.32421	155.7121	'NINNESC3 115.00 - ST JOHN 115KV CKT 1
13G	03ALL	'FROM->TO'	'HARPER - MILAN TAP 138KV CKT 1'	95.6	95.6	0.03293	155.7121	'NINNESC3 115.00 - ST JOHN 115KV CKT 1
13G	03ALL	'FROM->TO'	'HARPER - MILAN TAP 138KV CKT 1'	95.6	95.6	0.03621	155.7121	'NINNESC3 115.00 - ST JOHN 115KV CKT 1
13G	03ALL	'FROM->TO'	'HARPER - MILAN TAP 138KV CKT 1'	95.6	95.6	0.03621	155.7121	'NINNESC3 115.00 - ST JOHN 115KV CKT 1
13G	03ALL	'FROM->TO'	'HARPER - MILAN TAP 138KV CKT 1'	95.6	95.6	0.70629	155.7121	'NINNESC3 115.00 - ST JOHN 115KV CKT 1
13G	03ALL	'FROM->TO'	'HARPER - MILAN TAP 138KV CKT 1'	95.6	95.6	0.03274	155.7121	'NINNESC3 115.00 - ST JOHN 115KV CKT 1
13G	03ALL	'FROM->TO'	'HARPER - MILAN TAP 138KV CKT 1'	95.6	95.6	0.03919	155.7121	'NINNESC3 115.00 - ST JOHN 115KV CKT 1
13G	03ALL	'FROM->TO'	'HARPER - MILAN TAP 138KV CKT 1'	95.6	95.6	0.03317	155.7121	'NINNESC3 115.00 - ST JOHN 115KV CKT 1
13G	03ALL	'TO->FROM'	'CLEARWATER - MILAN TAP 138KV CKT 1'	110	110	0.15015	154.0838	'ALEXANDER - SAWYER 3 115.00 115KV CKT 1
13G	03ALL	'TO->FROM'	'CLEARWATER - MILAN TAP 138KV CKT 1'	110	110	0.0462	154.0838	'ALEXANDER - SAWYER 3 115.00 115KV CKT 1
13G	03ALL	'TO->FROM'	'CLEARWATER - MILAN TAP 138KV CKT 1'	110	110	0.0462	154.0838	'ALEXANDER - SAWYER 3 115.00 115KV CKT 1
13G	03ALL	'TO->FROM'	'CLEARWATER - MILAN TAP 138KV CKT 1'	110	110	0.32421	154.0838	'ALEXANDER - SAWYER 3 115.00 115KV CKT 1
13G	03ALL	'TO->FROM'	'CLEARWATER - MILAN TAP 138KV CKT 1'	110	110	0.03293	154.0838	'ALEXANDER - SAWYER 3 115.00 115KV CKT 1
13G	03ALL	'TO->FROM'	'CLEARWATER - MILAN TAP 138KV CKT 1'	110	110	0.03621	154.0838	'ALEXANDER - SAWYER 3 115.00 115KV CKT 1
13G	03ALL	'TO->FROM'	'CLEARWATER - MILAN TAP 138KV CKT 1'	110	110	0.03621	154.0838	'ALEXANDER - SAWYER 3 115.00 115KV CKT 1
13G	03ALL	'TO->FROM'	'CLEARWATER - MILAN TAP 138KV CKT 1'	110	110	0.70629	154.0838	'ALEXANDER - SAWYER 3 115.00 115KV CKT 1
13G	03ALL	'TO->FROM'	'CLEARWATER - MILAN TAP 138KV CKT 1'	110	110	0.03274	154.0838	'ALEXANDER - SAWYER 3 115.00 115KV CKT 1
13G	03ALL	'TO->FROM'	'CLEARWATER - MILAN TAP 138KV CKT 1'	110	110	0.03919	154.0838	'ALEXANDER - SAWYER 3 115.00 115KV CKT 1
13G	03ALL	'TO->FROM'	'CLEARWATER - MILAN TAP 138KV CKT 1'	110	110	0.03317	154.0838	'ALEXANDER - SAWYER 3 115.00 115KV CKT 1
13G	03ALL	'FROM->TO'	'HARPER - MILAN TAP 138KV CKT 1'	95.6	95.6	0.15015	184.3173	'ALEXANDER - SAWYER 3 115.00 115KV CKT 1
13G	03ALL	'FROM->TO'	'HARPER - MILAN TAP 138KV CKT 1'	95.6	95.6	0.0462	184.3173	'ALEXANDER - SAWYER 3 115.00 115KV CKT 1
13G	03ALL	'FROM->TO'	'HARPER - MILAN TAP 138KV CKT 1'	95.6	95.6	0.0462	184.3173	'ALEXANDER - SAWYER 3 115.00 115KV CKT 1
13G	03ALL	'FROM->TO'	'HARPER - MILAN TAP 138KV CKT 1'	95.6	95.6	0.32421	184.3173	'ALEXANDER - SAWYER 3 115.00 115KV CKT 1
13G	03ALL	'FROM->TO'	'HARPER - MILAN TAP 138KV CKT 1'	95.6	95.6	0.03293	184.3173	'ALEXANDER - SAWYER 3 115.00 115KV CKT 1
13G	03ALL	'FROM->TO'	'HARPER - MILAN TAP 138KV CKT 1'	95.6	95.6	0.03621	184.3173	'ALEXANDER - SAWYER 3 115.00 115KV CKT 1
13G	03ALL	'FROM->TO'	'HARPER - MILAN TAP 138KV CKT 1'	95.6	95.6	0.03621	184.3173	'ALEXANDER - SAWYER 3 115.00 115KV CKT 1
13G	03ALL	'FROM->TO'	'HARPER - MILAN TAP 138KV CKT 1'	95.6	95.6	0.70629	184.3173	'ALEXANDER - SAWYER 3 115.00 115KV CKT 1
13G	03ALL	'FROM->TO'	'HARPER - MILAN TAP 138KV CKT 1'	95.6	95.6	0.03274	184.3173	'ALEXANDER - SAWYER 3 115.00 115KV CKT 1
13G	03ALL	'FROM->TO'	'HARPER - MILAN TAP 138KV CKT 1'	95.6	95.6	0.03919	184.3173	'ALEXANDER - SAWYER 3 115.00 115KV CKT 1
13G	03ALL	'FROM->TO'	'HARPER - MILAN TAP 138KV CKT 1'	95.6	95.6	0.03317	184.3173	'ALEXANDER - SAWYER 3 115.00 115KV CKT 1
13G	03ALL	'FROM->TO'	'SEWARD - ST JOHN 115KV CKT 1'	80.3	80.3	0.03544	110.8243	'ALEXANDER - SAWYER 3 115.00 115KV CKT 1
13G	03ALL	'FROM->TO'	'SEWARD - ST JOHN 115KV CKT 1'	80.3	80.3	0.1037	110.8243	'ALEXANDER - SAWYER 3 115.00 115KV CKT 1
13G	03ALL	'FROM->TO'	'SEWARD - ST JOHN 115KV CKT 1'	80.3	80.3	0.03435	110.8243	'ALEXANDER - SAWYER 3 115.00 115KV CKT 1
13G	03ALL	'FROM->TO'	'SEWARD - ST JOHN 115KV CKT 1'	80.3	80.3	0.03435	110.8243	'ALEXANDER - SAWYER 3 115.00 115KV CKT 1
13G	03ALL	'FROM->TO'	'SEWARD - ST JOHN 115KV CKT 1'	80.3	80.3	0.03087	110.8243	'ALEXANDER - SAWYER 3 115.00 115KV CKT 1
13G	03ALL	'FROM->TO'	'SEWARD - ST JOHN 115KV CKT 1'	80.3	80.3	0.03147	110.8243	'ALEXANDER - SAWYER 3 115.00 115KV CKT 1
13G	03ALL	'TO->FROM'	'BARBER 3 115.00 - MEDICINE LODGE 115KV CKT 1'	79.7	79.7	0.14718	125.3971	'MEDICINE LODGE - SAWYER 3 115.00 115KV CKT 1
13G	03ALL	'TO->FROM'	'BARBER 3 115.00 - MEDICINE LODGE 115KV CKT 1'	79.7	79.7	0.03347	125.3971	'MEDICINE LODGE - SAWYER 3 115.00 115KV CKT 1
13G	03ALL	'TO->FROM'	'BARBER 3 115.00 - MEDICINE LODGE 115KV CKT 1'	79.7	79.7	0.03347	125.3971	'MEDICINE LODGE - SAWYER 3 115.00 115KV CKT 1
13G	03ALL	'TO->FROM'	'BARBER 3 115.00 - MEDICINE LODGE 115KV CKT 1'	79.7	79.7	0.33657	125.3971	'MEDICINE LODGE - SAWYER 3 115.00 115KV CKT 1
13G	03ALL	'TO->FROM'	'CLEARWATER - MILAN TAP 138KV CKT 1'	110	110	0.03609	129.2743	'CUDAHY - G08-79T 115.00 115KV CKT 1
13G	03ALL	'TO->FROM'	'CLEARWATER - MILAN TAP 138KV CKT 1'	110	110	0.06243	129.2743	'CUDAHY - G08-79T 115.00 115KV CKT 1
13G	03ALL	'TO->FROM'	'CLEARWATER - MILAN TAP 138KV CKT 1'	110	110	0.12341	129.2743	'CUDAHY - G08-79T 115.00 115KV CKT 1
13G	03ALL	'TO->FROM'	'CLEARWATER - MILAN TAP 138KV CKT 1'	110	110	0.05025	129.2743	'CUDAHY - G08-79T 115.00 115KV CKT 1
13G	03ALL	'TO->FROM'	'CLEARWATER - MILAN TAP 138KV CKT 1'	110	110	0.05025	129.2743	'CUDAHY - G08-79T 115.00 115KV CKT 1
13G	03ALL	'TO->FROM'	'CLEARWATER - MILAN TAP 138KV CKT 1'	110	110	0.22157	129.2743	'CUDAHY - G08-79T 115.00 115KV CKT 1
13G	03ALL	'TO->FROM'	'CLEARWATER - MILAN TAP 138KV CKT 1'	110	110	0.03418	129.2743	'CUDAHY - G08-79T 115.00 115KV CKT 1
13G	03ALL	'TO->FROM'	'CLEARWATER - MILAN TAP 138KV CKT 1'	110	110	0.03862	129.2743	'CUDAHY - G08-79T 115.00 115KV CKT 1
13G	03ALL	'TO->FROM'	'CLEARWATER - MILAN TAP 138KV CKT 1'	110	110	0.03862	129.2743	'CUDAHY - G08-79T 115.00 115KV CKT 1
13G	03ALL	'TO->FROM'	'CLEARWATER - MILAN TAP 138KV CKT 1'	110	110	0.53074	129.2743	'CUDAHY - G08-79T 115.00 115KV CKT 1

SEASON	GROUP	DIRECTION	MONITORED ELEMENT	RATE A (MVA)	RATE B (MVA)	TDF	TC%LOADING (%MVA)	CONTINGENCY NAME
13G	03ALL	'TO->FROM'	'CLEARWATER - MILAN TAP 138KV CKT 1'	110	110	0.03348	129.2743	'CUDAHY - G08-79T 115.00 115KV CKT 1
13G	03ALL	'TO->FROM'	'CLEARWATER - MILAN TAP 138KV CKT 1'	110	110	0.04329	129.2743	'CUDAHY - G08-79T 115.00 115KV CKT 1
13G	03ALL	'TO->FROM'	'CLEARWATER - MILAN TAP 138KV CKT 1'	110	110	0.03389	129.2743	'CUDAHY - G08-79T 115.00 115KV CKT 1
13G	03ALL	'FROM->TO'	'GREENSBURG - SUN CITY 115KV CKT 1'	120.7	129.5	0.20786	112.6645	'CUDAHY - G08-79T 115.00 115KV CKT 1
13G	03ALL	'FROM->TO'	'GREENSBURG - SUN CITY 115KV CKT 1'	120.7	129.5	0.0484	112.6645	'CUDAHY - G08-79T 115.00 115KV CKT 1
13G	03ALL	'FROM->TO'	'GREENSBURG - SUN CITY 115KV CKT 1'	120.7	129.5	0.0484	112.6645	'CUDAHY - G08-79T 115.00 115KV CKT 1
13G	03ALL	'FROM->TO'	'GREENSBURG - SUN CITY 115KV CKT 1'	120.7	129.5	0.42177	112.6645	'CUDAHY - G08-79T 115.00 115KV CKT 1
13G	03ALL	'FROM->TO'	'GREENSBURG - SUN CITY 115KV CKT 1'	120.7	129.5	0.03253	112.6645	'CUDAHY - G08-79T 115.00 115KV CKT 1
13G	03ALL	'FROM->TO'	'GREENSBURG - SUN CITY 115KV CKT 1'	120.7	129.5	0.03253	112.6645	'CUDAHY - G08-79T 115.00 115KV CKT 1
13G	03ALL	'FROM->TO'	'GREENSBURG - SUN CITY 115KV CKT 1'	120.7	129.5	0.03819	112.6645	'CUDAHY - G08-79T 115.00 115KV CKT 1
13G	03ALL	'TO->FROM'	'GREENSBURG - SSTARTP3 115.00 115KV CKT 1	120.7	129.5	0.20786	120.5654	'CUDAHY - G08-79T 115.00 115KV CKT 1
13G	03ALL	'TO->FROM'	'GREENSBURG - SSTARTP3 115.00 115KV CKT 1	120.7	129.5	0.0484	120.5654	'CUDAHY - G08-79T 115.00 115KV CKT 1
13G	03ALL	'TO->FROM'	'GREENSBURG - SSTARTP3 115.00 115KV CKT 1	120.7	129.5	0.0484	120.5654	'CUDAHY - G08-79T 115.00 115KV CKT 1
13G	03ALL	'TO->FROM'	'GREENSBURG - SSTARTP3 115.00 115KV CKT 1	120.7	129.5	0.42177	120.5654	'CUDAHY - G08-79T 115.00 115KV CKT 1
13G	03ALL	'TO->FROM'	'GREENSBURG - SSTARTP3 115.00 115KV CKT 1	120.7	129.5	0.03253	120.5654	'CUDAHY - G08-79T 115.00 115KV CKT 1
13G	03ALL	'TO->FROM'	'GREENSBURG - SSTARTP3 115.00 115KV CKT 1	120.7	129.5	0.03253	120.5654	'CUDAHY - G08-79T 115.00 115KV CKT 1
13G	03ALL	'TO->FROM'	'GREENSBURG - SSTARTP3 115.00 115KV CKT 1	120.7	129.5	0.03819	120.5654	'CUDAHY - G08-79T 115.00 115KV CKT 1
13G	03ALL	'FROM->TO'	'HARPER - MILAN TAP 138KV CKT 1'	95.6	95.6	0.03609	156.0041	'CUDAHY - G08-79T 115.00 115KV CKT 1
13G	03ALL	'FROM->TO'	'HARPER - MILAN TAP 138KV CKT 1'	95.6	95.6	0.06243	156.0041	'CUDAHY - G08-79T 115.00 115KV CKT 1
13G	03ALL	'FROM->TO'	'HARPER - MILAN TAP 138KV CKT 1'	95.6	95.6	0.12341	156.0041	'CUDAHY - G08-79T 115.00 115KV CKT 1
13G	03ALL	'FROM->TO'	'HARPER - MILAN TAP 138KV CKT 1'	95.6	95.6	0.05025	156.0041	'CUDAHY - G08-79T 115.00 115KV CKT 1
13G	03ALL	'FROM->TO'	'HARPER - MILAN TAP 138KV CKT 1'	95.6	95.6	0.05025	156.0041	'CUDAHY - G08-79T 115.00 115KV CKT 1
13G	03ALL	'FROM->TO'	'HARPER - MILAN TAP 138KV CKT 1'	95.6	95.6	0.22157	156.0041	'CUDAHY - G08-79T 115.00 115KV CKT 1
13G	03ALL	'FROM->TO'	'HARPER - MILAN TAP 138KV CKT 1'	95.6	95.6	0.03418	156.0041	'CUDAHY - G08-79T 115.00 115KV CKT 1
13G	03ALL	'FROM->TO'	'HARPER - MILAN TAP 138KV CKT 1'	95.6	95.6	0.03862	156.0041	'CUDAHY - G08-79T 115.00 115KV CKT 1
13G	03ALL	'FROM->TO'	'HARPER - MILAN TAP 138KV CKT 1'	95.6	95.6	0.03862	156.0041	'CUDAHY - G08-79T 115.00 115KV CKT 1
13G	03ALL	'FROM->TO'	'HARPER - MILAN TAP 138KV CKT 1'	95.6	95.6	0.53074	156.0041	'CUDAHY - G08-79T 115.00 115KV CKT 1
13G	03ALL	'FROM->TO'	'HARPER - MILAN TAP 138KV CKT 1'	95.6	95.6	0.03348	156.0041	'CUDAHY - G08-79T 115.00 115KV CKT 1
13G	03ALL	'FROM->TO'	'HARPER - MILAN TAP 138KV CKT 1'	95.6	95.6	0.04329	156.0041	'CUDAHY - G08-79T 115.00 115KV CKT 1
13G	03ALL	'FROM->TO'	'HARPER - MILAN TAP 138KV CKT 1'	95.6	95.6	0.03389	156.0041	'CUDAHY - G08-79T 115.00 115KV CKT 1
13G	03ALL	'TO->FROM'	'MEDICINE LODGE - SUN CITY 115KV CKT 1'	120.7	129.5	0.20786	110.0704	'CUDAHY - G08-79T 115.00 115KV CKT 1
13G	03ALL	'TO->FROM'	'MEDICINE LODGE - SUN CITY 115KV CKT 1'	120.7	129.5	0.0484	110.0704	'CUDAHY - G08-79T 115.00 115KV CKT 1
13G	03ALL	'TO->FROM'	'MEDICINE LODGE - SUN CITY 115KV CKT 1'	120.7	129.5	0.0484	110.0704	'CUDAHY - G08-79T 115.00 115KV CKT 1
13G	03ALL	'TO->FROM'	'MEDICINE LODGE - SUN CITY 115KV CKT 1'	120.7	129.5	0.42177	110.0704	'CUDAHY - G08-79T 115.00 115KV CKT 1
13G	03ALL	'TO->FROM'	'MEDICINE LODGE - SUN CITY 115KV CKT 1'	120.7	129.5	0.03253	110.0704	'CUDAHY - G08-79T 115.00 115KV CKT 1
13G	03ALL	'TO->FROM'	'MEDICINE LODGE - SUN CITY 115KV CKT 1'	120.7	129.5	0.03253	110.0704	'CUDAHY - G08-79T 115.00 115KV CKT 1
13G	03ALL	'TO->FROM'	'MEDICINE LODGE - SUN CITY 115KV CKT 1'	120.7	129.5	0.03819	110.0704	'CUDAHY - G08-79T 115.00 115KV CKT 1
13G	03ALL	'TO->FROM'	'BARBER 3 115.00 - MEDICINE LODGE 115KV CKT 1'	79.7	79.7	0.13491	108.9697	'CUDAHY - G08-79T 115.00 115KV CKT 1
13G	03ALL	'TO->FROM'	'BARBER 3 115.00 - MEDICINE LODGE 115KV CKT 1'	79.7	79.7	0.03716	108.9697	'CUDAHY - G08-79T 115.00 115KV CKT 1
13G	03ALL	'TO->FROM'	'BARBER 3 115.00 - MEDICINE LODGE 115KV CKT 1'	79.7	79.7	0.03716	108.9697	'CUDAHY - G08-79T 115.00 115KV CKT 1
13G	03ALL	'TO->FROM'	'BARBER 3 115.00 - MEDICINE LODGE 115KV CKT 1'	79.7	79.7	0.26603	108.9697	'CUDAHY - G08-79T 115.00 115KV CKT 1
13G	03ALL	'TO->FROM'	'BARBER 3 115.00 - MEDICINE LODGE 115KV CKT 1'	79.7	79.7	0.03029	108.9697	'CUDAHY - G08-79T 115.00 115KV CKT 1
13G	03ALL	'FROM->TO'	'NORTH JUDSON LARGE SUB - SPEARVILLE 115KV CKT 1'	165.1	177.7	0.78385	112.2444	'CUDAHY - G08-79T 115.00 115KV CKT 1
13G	03ALL	'FROM->TO'	'NORTH JUDSON LARGE SUB - SPEARVILLE 115KV CKT 1'	165.1	177.7	0.56994	112.2444	'CUDAHY - G08-79T 115.00 115KV CKT 1
13G	03ALL	'FROM->TO'	'NORTH JUDSON LARGE SUB - SPEARVILLE 115KV CKT 1'	165.1	177.7	0.16059	112.2444	'CUDAHY - G08-79T 115.00 115KV CKT 1
13G	03ALL	'FROM->TO'	'SMOKYHL6 230.00 - SUMMIT 230KV CKT 1'	319	319	0.18709	109.331	'GREENSBURG - SUN CITY 115KV CKT 1'
13G	03ALL	'FROM->TO'	'SMOKYHL6 230.00 - SUMMIT 230KV CKT 1'	319	319	0.08944	109.331	'GREENSBURG - SUN CITY 115KV CKT 1'
13G	03ALL	'FROM->TO'	'SMOKYHL6 230.00 - SUMMIT 230KV CKT 1'	319	319	0.12342	109.331	'GREENSBURG - SUN CITY 115KV CKT 1'
13G	03ALL	'FROM->TO'	'SMOKYHL6 230.00 - SUMMIT 230KV CKT 1'	319	319	0.12733	109.331	'GREENSBURG - SUN CITY 115KV CKT 1'
13G	03ALL	'FROM->TO'	'SMOKYHL6 230.00 - SUMMIT 230KV CKT 1'	319	319	0.12733	109.331	'GREENSBURG - SUN CITY 115KV CKT 1'
13G	03ALL	'FROM->TO'	'SMOKYHL6 230.00 - SUMMIT 230KV CKT 1'	319	319	0.12337	109.331	'GREENSBURG - SUN CITY 115KV CKT 1'
13G	03ALL	'FROM->TO'	'SMOKYHL6 230.00 - SUMMIT 230KV CKT 1'	319	319	0.1033	109.331	'GREENSBURG - SUN CITY 115KV CKT 1'
13G	03ALL	'FROM->TO'	'SMOKYHL6 230.00 - SUMMIT 230KV CKT 1'	319	319	0.11896	109.331	'GREENSBURG - SUN CITY 115KV CKT 1'
13G	03ALL	'FROM->TO'	'SMOKYHL6 230.00 - SUMMIT 230KV CKT 1'	319	319	0.11896	109.331	'GREENSBURG - SUN CITY 115KV CKT 1'
13G	03ALL	'FROM->TO'	'SMOKYHL6 230.00 - SUMMIT 230KV CKT 1'	319	319	0.62668	109.331	'GREENSBURG - SUN CITY 115KV CKT 1'
13G	03ALL	'FROM->TO'	'SMOKYHL6 230.00 - SUMMIT 230KV CKT 1'	319	319	0.10331	109.331	'GREENSBURG - SUN CITY 115KV CKT 1'
13G	03ALL	'FROM->TO'	'SMOKYHL6 230.00 - SUMMIT 230KV CKT 1'	319	319	0.1316	109.331	'GREENSBURG - SUN CITY 115KV CKT 1'
13G	03ALL	'FROM->TO'	'SMOKYHL6 230.00 - SUMMIT 230KV CKT 1'	319	319	0.10616	109.331	'GREENSBURG - SUN CITY 115KV CKT 1'
13G	03ALL	'FROM->TO'	'SEWARD - ST JOHN 115KV CKT 1'	80.3	80.3	0.05397	127.2887	'GREENSBURG - SUN CITY 115KV CKT 1'
13G	03ALL	'FROM->TO'	'SEWARD - ST JOHN 115KV CKT 1'	80.3	80.3	0.14296	127.2887	'GREENSBURG - SUN CITY 115KV CKT 1'
13G	03ALL	'FROM->TO'	'SEWARD - ST JOHN 115KV CKT 1'	80.3	80.3	0.05135	127.2887	'GREENSBURG - SUN CITY 115KV CKT 1'
13G	03ALL	'FROM->TO'	'SEWARD - ST JOHN 115KV CKT 1'	80.3	80.3	0.05321	127.2887	'GREENSBURG - SUN CITY 115KV CKT 1'
13G	03ALL	'FROM->TO'	'SEWARD - ST JOHN 115KV CKT 1'	80.3	80.3	0.05321	127.2887	'GREENSBURG - SUN CITY 115KV CKT 1'
13G	03ALL	'FROM->TO'	'SEWARD - ST JOHN 115KV CKT 1'	80.3	80.3	0.05132	127.2887	'GREENSBURG - SUN CITY 115KV CKT 1'

SEASON	GROUP	DIRECTION	MONITORED ELEMENT	RATE A (MVA)	RATE B (MVA)	TDF	TC%LOADING (%MVA)	CONTINGENCY NAME
13G	03ALL	'FROM->TO'	'SEWARD - ST JOHN 115KV CKT 1'	80.3	80.3	0.04667	127.2887	'GREENSBURG - SUN CITY 115KV CKT 1'
13G	03ALL	'FROM->TO'	'SEWARD - ST JOHN 115KV CKT 1'	80.3	80.3	0.04522	127.2887	'GREENSBURG - SUN CITY 115KV CKT 1'
13G	03ALL	'FROM->TO'	'SEWARD - ST JOHN 115KV CKT 1'	80.3	80.3	0.04522	127.2887	'GREENSBURG - SUN CITY 115KV CKT 1'
13G	03ALL	'FROM->TO'	'SEWARD - ST JOHN 115KV CKT 1'	80.3	80.3	0.04525	127.2887	'GREENSBURG - SUN CITY 115KV CKT 1'
13G	03ALL	'FROM->TO'	'SEWARD - ST JOHN 115KV CKT 1'	80.3	80.3	0.04869	127.2887	'GREENSBURG - SUN CITY 115KV CKT 1'
13G	03ALL	'FROM->TO'	'SEWARD - ST JOHN 115KV CKT 1'	80.3	80.3	0.04169	127.2887	'GREENSBURG - SUN CITY 115KV CKT 1'
13G	03ALL	'FROM->TO'	'NORTH JUDSON LARGE SUB - SPEARVILLE 115KV CKT 1'	165.1	177.7	0.79233	122.8046	'GREENSBURG - SUN CITY 115KV CKT 1'
13G	03ALL	'FROM->TO'	'NORTH JUDSON LARGE SUB - SPEARVILLE 115KV CKT 1'	165.1	177.7	0.78977	122.8046	'GREENSBURG - SUN CITY 115KV CKT 1'
13G	03ALL	'FROM->TO'	'SPEARVILLE (SPEARVL6) 230/115/13.8KV TRANSFORMER CKT 1	205	205	0.79233	100.6197	'GREENSBURG - SUN CITY 115KV CKT 1'
13G	03ALL	'FROM->TO'	'SPEARVILLE (SPEARVL6) 230/115/13.8KV TRANSFORMER CKT 1	205	205	0.78977	100.6197	'GREENSBURG - SUN CITY 115KV CKT 1'
13G	03ALL	'FROM->TO'	'SPEARVILLE (SPEARVL6) 230/115/13.8KV TRANSFORMER CKT 1	205	205	0.79233	102.1646	'GREENSBURG - SUN CITY 115KV CKT 1'
13G	03ALL	'FROM->TO'	'SPEARVILLE (SPEARVL6) 230/115/13.8KV TRANSFORMER CKT 1	205	205	0.78977	102.1646	'GREENSBURG - SUN CITY 115KV CKT 1'
13G	03ALL	'FROM->TO'	'SMOKYHL6 230.00 - SUMMIT 230KV CKT 1'	319	319	0.18813	106.3249	'GREAT BEND TAP - MULLERGREN 115KV CKT 1'
13G	03ALL	'FROM->TO'	'SMOKYHL6 230.00 - SUMMIT 230KV CKT 1'	319	319	0.08893	106.3249	'GREAT BEND TAP - MULLERGREN 115KV CKT 1'
13G	03ALL	'FROM->TO'	'SMOKYHL6 230.00 - SUMMIT 230KV CKT 1'	319	319	0.10249	106.3249	'GREAT BEND TAP - MULLERGREN 115KV CKT 1'
13G	03ALL	'FROM->TO'	'SMOKYHL6 230.00 - SUMMIT 230KV CKT 1'	319	319	0.12418	106.3249	'GREAT BEND TAP - MULLERGREN 115KV CKT 1'
13G	03ALL	'FROM->TO'	'SMOKYHL6 230.00 - SUMMIT 230KV CKT 1'	319	319	0.12418	106.3249	'GREAT BEND TAP - MULLERGREN 115KV CKT 1'
13G	03ALL	'FROM->TO'	'SMOKYHL6 230.00 - SUMMIT 230KV CKT 1'	319	319	0.07299	106.3249	'GREAT BEND TAP - MULLERGREN 115KV CKT 1'
13G	03ALL	'FROM->TO'	'SMOKYHL6 230.00 - SUMMIT 230KV CKT 1'	319	319	0.10143	106.3249	'GREAT BEND TAP - MULLERGREN 115KV CKT 1'
13G	03ALL	'FROM->TO'	'SMOKYHL6 230.00 - SUMMIT 230KV CKT 1'	319	319	0.11672	106.3249	'GREAT BEND TAP - MULLERGREN 115KV CKT 1'
13G	03ALL	'FROM->TO'	'SMOKYHL6 230.00 - SUMMIT 230KV CKT 1'	319	319	0.11672	106.3249	'GREAT BEND TAP - MULLERGREN 115KV CKT 1'
13G	03ALL	'FROM->TO'	'SMOKYHL6 230.00 - SUMMIT 230KV CKT 1'	319	319	0.62715	106.3249	'GREAT BEND TAP - MULLERGREN 115KV CKT 1'
13G	03ALL	'FROM->TO'	'SMOKYHL6 230.00 - SUMMIT 230KV CKT 1'	319	319	0.1014	106.3249	'GREAT BEND TAP - MULLERGREN 115KV CKT 1'
13G	03ALL	'FROM->TO'	'SMOKYHL6 230.00 - SUMMIT 230KV CKT 1'	319	319	0.12922	106.3249	'GREAT BEND TAP - MULLERGREN 115KV CKT 1'
13G	03ALL	'FROM->TO'	'SMOKYHL6 230.00 - SUMMIT 230KV CKT 1'	319	319	0.10406	106.3249	'GREAT BEND TAP - MULLERGREN 115KV CKT 1'
13G	03ALL	'TO->FROM'	'CLEARWATER - MILAN TAP 138KV CKT 1'	110	110	0.03001	115.9307	'GREAT BEND TAP - MULLERGREN 115KV CKT 1'
13G	03ALL	'TO->FROM'	'CLEARWATER - MILAN TAP 138KV CKT 1'	110	110	0.06401	115.9307	'GREAT BEND TAP - MULLERGREN 115KV CKT 1'
13G	03ALL	'TO->FROM'	'CLEARWATER - MILAN TAP 138KV CKT 1'	110	110	0.11013	115.9307	'GREAT BEND TAP - MULLERGREN 115KV CKT 1'
13G	03ALL	'TO->FROM'	'CLEARWATER - MILAN TAP 138KV CKT 1'	110	110	0.04437	115.9307	'GREAT BEND TAP - MULLERGREN 115KV CKT 1'
13G	03ALL	'TO->FROM'	'CLEARWATER - MILAN TAP 138KV CKT 1'	110	110	0.04437	115.9307	'GREAT BEND TAP - MULLERGREN 115KV CKT 1'
13G	03ALL	'TO->FROM'	'CLEARWATER - MILAN TAP 138KV CKT 1'	110	110	0.22106	115.9307	'GREAT BEND TAP - MULLERGREN 115KV CKT 1'
13G	03ALL	'TO->FROM'	'CLEARWATER - MILAN TAP 138KV CKT 1'	110	110	0.03432	115.9307	'GREAT BEND TAP - MULLERGREN 115KV CKT 1'
13G	03ALL	'TO->FROM'	'CLEARWATER - MILAN TAP 138KV CKT 1'	110	110	0.03595	115.9307	'GREAT BEND TAP - MULLERGREN 115KV CKT 1'
13G	03ALL	'TO->FROM'	'CLEARWATER - MILAN TAP 138KV CKT 1'	110	110	0.03595	115.9307	'GREAT BEND TAP - MULLERGREN 115KV CKT 1'
13G	03ALL	'TO->FROM'	'CLEARWATER - MILAN TAP 138KV CKT 1'	110	110	0.54719	115.9307	'GREAT BEND TAP - MULLERGREN 115KV CKT 1'
13G	03ALL	'TO->FROM'	'CLEARWATER - MILAN TAP 138KV CKT 1'	110	110	0.03381	115.9307	'GREAT BEND TAP - MULLERGREN 115KV CKT 1'
13G	03ALL	'TO->FROM'	'CLEARWATER - MILAN TAP 138KV CKT 1'	110	110	0.03882	115.9307	'GREAT BEND TAP - MULLERGREN 115KV CKT 1'
13G	03ALL	'TO->FROM'	'CLEARWATER - MILAN TAP 138KV CKT 1'	110	110	0.03302	115.9307	'GREAT BEND TAP - MULLERGREN 115KV CKT 1'
13G	03ALL	'FROM->TO'	'GREENSBURG - SUN CITY 115KV CKT 1'	120.7	129.5	0.17626	102.8855	'GREAT BEND TAP - MULLERGREN 115KV CKT 1'
13G	03ALL	'FROM->TO'	'GREENSBURG - SUN CITY 115KV CKT 1'	120.7	129.5	0.04791	102.8855	'GREAT BEND TAP - MULLERGREN 115KV CKT 1'
13G	03ALL	'FROM->TO'	'GREENSBURG - SUN CITY 115KV CKT 1'	120.7	129.5	0.04791	102.8855	'GREAT BEND TAP - MULLERGREN 115KV CKT 1'
13G	03ALL	'FROM->TO'	'GREENSBURG - SUN CITY 115KV CKT 1'	120.7	129.5	0.39072	102.8855	'GREAT BEND TAP - MULLERGREN 115KV CKT 1'
13G	03ALL	'FROM->TO'	'GREENSBURG - SUN CITY 115KV CKT 1'	120.7	129.5	0.03241	102.8855	'GREAT BEND TAP - MULLERGREN 115KV CKT 1'
13G	03ALL	'FROM->TO'	'GREENSBURG - SUN CITY 115KV CKT 1'	120.7	129.5	0.0368	102.8855	'GREAT BEND TAP - MULLERGREN 115KV CKT 1'
13G	03ALL	'FROM->TO'	'GREENSBURG - SUN CITY 115KV CKT 1'	120.7	129.5	0.0368	102.8855	'GREAT BEND TAP - MULLERGREN 115KV CKT 1'
13G	03ALL	'FROM->TO'	'GREENSBURG - SUN CITY 115KV CKT 1'	120.7	129.5	0.03242	102.8855	'GREAT BEND TAP - MULLERGREN 115KV CKT 1'
13G	03ALL	'FROM->TO'	'GREENSBURG - SUN CITY 115KV CKT 1'	120.7	129.5	0.03991	102.8855	'GREAT BEND TAP - MULLERGREN 115KV CKT 1'
13G	03ALL	'FROM->TO'	'GREENSBURG - SUN CITY 115KV CKT 1'	120.7	129.5	0.03365	102.8855	'GREAT BEND TAP - MULLERGREN 115KV CKT 1'
13G	03ALL	'TO->FROM'	'GREENSBURG - SSTARTP3 115.00 115KV CKT 1	120.7	129.5	0.17626	110.7417	'GREAT BEND TAP - MULLERGREN 115KV CKT 1'
13G	03ALL	'TO->FROM'	'GREENSBURG - SSTARTP3 115.00 115KV CKT 1	120.7	129.5	0.04791	110.7417	'GREAT BEND TAP - MULLERGREN 115KV CKT 1'
13G	03ALL	'TO->FROM'	'GREENSBURG - SSTARTP3 115.00 115KV CKT 1	120.7	129.5	0.04791	110.7417	'GREAT BEND TAP - MULLERGREN 115KV CKT 1'
13G	03ALL	'TO->FROM'	'GREENSBURG - SSTARTP3 115.00 115KV CKT 1	120.7	129.5	0.39072	110.7417	'GREAT BEND TAP - MULLERGREN 115KV CKT 1'
13G	03ALL	'TO->FROM'	'GREENSBURG - SSTARTP3 115.00 115KV CKT 1	120.7	129.5	0.03241	110.7417	'GREAT BEND TAP - MULLERGREN 115KV CKT 1'
13G	03ALL	'TO->FROM'	'GREENSBURG - SSTARTP3 115.00 115KV CKT 1	120.7	129.5	0.0368	110.7417	'GREAT BEND TAP - MULLERGREN 115KV CKT 1'
13G	03ALL	'TO->FROM'	'GREENSBURG - SSTARTP3 115.00 115KV CKT 1	120.7	129.5	0.0368	110.7417	'GREAT BEND TAP - MULLERGREN 115KV CKT 1'
13G	03ALL	'TO->FROM'	'GREENSBURG - SSTARTP3 115.00 115KV CKT 1	120.7	129.5	0.03242	110.7417	'GREAT BEND TAP - MULLERGREN 115KV CKT 1'
13G	03ALL	'TO->FROM'	'GREENSBURG - SSTARTP3 115.00 115KV CKT 1	120.7	129.5	0.03991	110.7417	'GREAT BEND TAP - MULLERGREN 115KV CKT 1'
13G	03ALL	'TO->FROM'	'GREENSBURG - SSTARTP3 115.00 115KV CKT 1	120.7	129.5	0.03365	110.7417	'GREAT BEND TAP - MULLERGREN 115KV CKT 1'
13G	03ALL	'FROM->TO'	'HARPER - MILAN TAP 138KV CKT 1'	95.6	95.6	0.03001	140.6462	'GREAT BEND TAP - MULLERGREN 115KV CKT 1'
13G	03ALL	'FROM->TO'	'HARPER - MILAN TAP 138KV CKT 1'	95.6	95.6	0.06401	140.6462	'GREAT BEND TAP - MULLERGREN 115KV CKT 1'
13G	03ALL	'FROM->TO'	'HARPER - MILAN TAP 138KV CKT 1'	95.6	95.6	0.11013	140.6462	'GREAT BEND TAP - MULLERGREN 115KV CKT 1'
13G	03ALL	'FROM->TO'	'HARPER - MILAN TAP 138KV CKT 1'	95.6	95.6	0.04437	140.6462	'GREAT BEND TAP - MULLERGREN 115KV CKT 1'
13G	03ALL	'FROM->TO'	'HARPER - MILAN TAP 138KV CKT 1'	95.6	95.6	0.04437	140.6462	'GREAT BEND TAP - MULLERGREN 115KV CKT 1'
13G	03ALL	'FROM->TO'	'HARPER - MILAN TAP 138KV CKT 1'	95.6	95.6	0.22106	140.6462	'GREAT BEND TAP - MULLERGREN 115KV CKT 1'

SEASON	GROUP	DIRECTION	MONITORED ELEMENT	RATE A (MVA)	RATE B (MVA)	TDF	TC%LOADING (%MVA)	CONTINGENCY NAME
13G	03ALL	'FROM->TO'	'HARPER - MILAN TAP 138KV CKT 1'	95.6	95.6	0.03432	140.6462	'GREAT BEND TAP - MULLERGREN 115KV CKT 1'
13G	03ALL	'FROM->TO'	'HARPER - MILAN TAP 138KV CKT 1'	95.6	95.6	0.03595	140.6462	'GREAT BEND TAP - MULLERGREN 115KV CKT 1'
13G	03ALL	'FROM->TO'	'HARPER - MILAN TAP 138KV CKT 1'	95.6	95.6	0.03595	140.6462	'GREAT BEND TAP - MULLERGREN 115KV CKT 1'
13G	03ALL	'FROM->TO'	'HARPER - MILAN TAP 138KV CKT 1'	95.6	95.6	0.54719	140.6462	'GREAT BEND TAP - MULLERGREN 115KV CKT 1'
13G	03ALL	'FROM->TO'	'HARPER - MILAN TAP 138KV CKT 1'	95.6	95.6	0.03381	140.6462	'GREAT BEND TAP - MULLERGREN 115KV CKT 1'
13G	03ALL	'FROM->TO'	'HARPER - MILAN TAP 138KV CKT 1'	95.6	95.6	0.03882	140.6462	'GREAT BEND TAP - MULLERGREN 115KV CKT 1'
13G	03ALL	'FROM->TO'	'HARPER - MILAN TAP 138KV CKT 1'	95.6	95.6	0.03302	140.6462	'GREAT BEND TAP - MULLERGREN 115KV CKT 1'
13G	03ALL	'FROM->TO'	'SMOKYHL6 230.00 - SUMMIT 230KV CKT 1'	319	319	0.18813	106.3288	'GREAT BEND TAP - SEWARD 115KV CKT 1'
13G	03ALL	'FROM->TO'	'SMOKYHL6 230.00 - SUMMIT 230KV CKT 1'	319	319	0.08893	106.3288	'GREAT BEND TAP - SEWARD 115KV CKT 1'
13G	03ALL	'FROM->TO'	'SMOKYHL6 230.00 - SUMMIT 230KV CKT 1'	319	319	0.10249	106.3288	'GREAT BEND TAP - SEWARD 115KV CKT 1'
13G	03ALL	'FROM->TO'	'SMOKYHL6 230.00 - SUMMIT 230KV CKT 1'	319	319	0.12418	106.3288	'GREAT BEND TAP - SEWARD 115KV CKT 1'
13G	03ALL	'FROM->TO'	'SMOKYHL6 230.00 - SUMMIT 230KV CKT 1'	319	319	0.12418	106.3288	'GREAT BEND TAP - SEWARD 115KV CKT 1'
13G	03ALL	'FROM->TO'	'SMOKYHL6 230.00 - SUMMIT 230KV CKT 1'	319	319	0.07299	106.3288	'GREAT BEND TAP - SEWARD 115KV CKT 1'
13G	03ALL	'FROM->TO'	'SMOKYHL6 230.00 - SUMMIT 230KV CKT 1'	319	319	0.10143	106.3288	'GREAT BEND TAP - SEWARD 115KV CKT 1'
13G	03ALL	'FROM->TO'	'SMOKYHL6 230.00 - SUMMIT 230KV CKT 1'	319	319	0.11672	106.3288	'GREAT BEND TAP - SEWARD 115KV CKT 1'
13G	03ALL	'FROM->TO'	'SMOKYHL6 230.00 - SUMMIT 230KV CKT 1'	319	319	0.11672	106.3288	'GREAT BEND TAP - SEWARD 115KV CKT 1'
13G	03ALL	'FROM->TO'	'SMOKYHL6 230.00 - SUMMIT 230KV CKT 1'	319	319	0.62715	106.3288	'GREAT BEND TAP - SEWARD 115KV CKT 1'
13G	03ALL	'FROM->TO'	'SMOKYHL6 230.00 - SUMMIT 230KV CKT 1'	319	319	0.1014	106.3288	'GREAT BEND TAP - SEWARD 115KV CKT 1'
13G	03ALL	'FROM->TO'	'SMOKYHL6 230.00 - SUMMIT 230KV CKT 1'	319	319	0.12922	106.3288	'GREAT BEND TAP - SEWARD 115KV CKT 1'
13G	03ALL	'FROM->TO'	'SMOKYHL6 230.00 - SUMMIT 230KV CKT 1'	319	319	0.10406	106.3288	'GREAT BEND TAP - SEWARD 115KV CKT 1'
13G	03ALL	'TO->FROM'	'CLEARWATER - MILAN TAP 138KV CKT 1'	110	110	0.03001	115.959	'GREAT BEND TAP - SEWARD 115KV CKT 1'
13G	03ALL	'TO->FROM'	'CLEARWATER - MILAN TAP 138KV CKT 1'	110	110	0.06401	115.959	'GREAT BEND TAP - SEWARD 115KV CKT 1'
13G	03ALL	'TO->FROM'	'CLEARWATER - MILAN TAP 138KV CKT 1'	110	110	0.11013	115.959	'GREAT BEND TAP - SEWARD 115KV CKT 1'
13G	03ALL	'TO->FROM'	'CLEARWATER - MILAN TAP 138KV CKT 1'	110	110	0.04437	115.959	'GREAT BEND TAP - SEWARD 115KV CKT 1'
13G	03ALL	'TO->FROM'	'CLEARWATER - MILAN TAP 138KV CKT 1'	110	110	0.04437	115.959	'GREAT BEND TAP - SEWARD 115KV CKT 1'
13G	03ALL	'TO->FROM'	'CLEARWATER - MILAN TAP 138KV CKT 1'	110	110	0.22106	115.959	'GREAT BEND TAP - SEWARD 115KV CKT 1'
13G	03ALL	'TO->FROM'	'CLEARWATER - MILAN TAP 138KV CKT 1'	110	110	0.03432	115.959	'GREAT BEND TAP - SEWARD 115KV CKT 1'
13G	03ALL	'TO->FROM'	'CLEARWATER - MILAN TAP 138KV CKT 1'	110	110	0.03595	115.959	'GREAT BEND TAP - SEWARD 115KV CKT 1'
13G	03ALL	'TO->FROM'	'CLEARWATER - MILAN TAP 138KV CKT 1'	110	110	0.03595	115.959	'GREAT BEND TAP - SEWARD 115KV CKT 1'
13G	03ALL	'TO->FROM'	'CLEARWATER - MILAN TAP 138KV CKT 1'	110	110	0.54719	115.959	'GREAT BEND TAP - SEWARD 115KV CKT 1'
13G	03ALL	'TO->FROM'	'CLEARWATER - MILAN TAP 138KV CKT 1'	110	110	0.03381	115.959	'GREAT BEND TAP - SEWARD 115KV CKT 1'
13G	03ALL	'TO->FROM'	'CLEARWATER - MILAN TAP 138KV CKT 1'	110	110	0.03882	115.959	'GREAT BEND TAP - SEWARD 115KV CKT 1'
13G	03ALL	'TO->FROM'	'CLEARWATER - MILAN TAP 138KV CKT 1'	110	110	0.03302	115.959	'GREAT BEND TAP - SEWARD 115KV CKT 1'
13G	03ALL	'FROM->TO'	'GREENSBURG - SUN CITY 115KV CKT 1'	120.7	129.5	0.17626	102.8627	'GREAT BEND TAP - SEWARD 115KV CKT 1'
13G	03ALL	'FROM->TO'	'GREENSBURG - SUN CITY 115KV CKT 1'	120.7	129.5	0.04791	102.8627	'GREAT BEND TAP - SEWARD 115KV CKT 1'
13G	03ALL	'FROM->TO'	'GREENSBURG - SUN CITY 115KV CKT 1'	120.7	129.5	0.04791	102.8627	'GREAT BEND TAP - SEWARD 115KV CKT 1'
13G	03ALL	'FROM->TO'	'GREENSBURG - SUN CITY 115KV CKT 1'	120.7	129.5	0.39072	102.8627	'GREAT BEND TAP - SEWARD 115KV CKT 1'
13G	03ALL	'FROM->TO'	'GREENSBURG - SUN CITY 115KV CKT 1'	120.7	129.5	0.03241	102.8627	'GREAT BEND TAP - SEWARD 115KV CKT 1'
13G	03ALL	'FROM->TO'	'GREENSBURG - SUN CITY 115KV CKT 1'	120.7	129.5	0.0368	102.8627	'GREAT BEND TAP - SEWARD 115KV CKT 1'
13G	03ALL	'FROM->TO'	'GREENSBURG - SUN CITY 115KV CKT 1'	120.7	129.5	0.0368	102.8627	'GREAT BEND TAP - SEWARD 115KV CKT 1'
13G	03ALL	'FROM->TO'	'GREENSBURG - SUN CITY 115KV CKT 1'	120.7	129.5	0.03242	102.8627	'GREAT BEND TAP - SEWARD 115KV CKT 1'
13G	03ALL	'FROM->TO'	'GREENSBURG - SUN CITY 115KV CKT 1'	120.7	129.5	0.03991	102.8627	'GREAT BEND TAP - SEWARD 115KV CKT 1'
13G	03ALL	'FROM->TO'	'GREENSBURG - SUN CITY 115KV CKT 1'	120.7	129.5	0.03365	102.8627	'GREAT BEND TAP - SEWARD 115KV CKT 1'
13G	03ALL	'TO->FROM'	'GREENSBURG - SSTARTP3 115.00 115KV CKT 1	120.7	129.5	0.17626	110.7196	'GREAT BEND TAP - SEWARD 115KV CKT 1'
13G	03ALL	'TO->FROM'	'GREENSBURG - SSTARTP3 115.00 115KV CKT 1	120.7	129.5	0.04791	110.7196	'GREAT BEND TAP - SEWARD 115KV CKT 1'
13G	03ALL	'TO->FROM'	'GREENSBURG - SSTARTP3 115.00 115KV CKT 1	120.7	129.5	0.04791	110.7196	'GREAT BEND TAP - SEWARD 115KV CKT 1'
13G	03ALL	'TO->FROM'	'GREENSBURG - SSTARTP3 115.00 115KV CKT 1	120.7	129.5	0.39072	110.7196	'GREAT BEND TAP - SEWARD 115KV CKT 1'
13G	03ALL	'TO->FROM'	'GREENSBURG - SSTARTP3 115.00 115KV CKT 1	120.7	129.5	0.03241	110.7196	'GREAT BEND TAP - SEWARD 115KV CKT 1'
13G	03ALL	'TO->FROM'	'GREENSBURG - SSTARTP3 115.00 115KV CKT 1	120.7	129.5	0.0368	110.7196	'GREAT BEND TAP - SEWARD 115KV CKT 1'
13G	03ALL	'TO->FROM'	'GREENSBURG - SSTARTP3 115.00 115KV CKT 1	120.7	129.5	0.0368	110.7196	'GREAT BEND TAP - SEWARD 115KV CKT 1'
13G	03ALL	'TO->FROM'	'GREENSBURG - SSTARTP3 115.00 115KV CKT 1	120.7	129.5	0.03242	110.7196	'GREAT BEND TAP - SEWARD 115KV CKT 1'
13G	03ALL	'TO->FROM'	'GREENSBURG - SSTARTP3 115.00 115KV CKT 1	120.7	129.5	0.03991	110.7196	'GREAT BEND TAP - SEWARD 115KV CKT 1'
13G	03ALL	'TO->FROM'	'GREENSBURG - SSTARTP3 115.00 115KV CKT 1	120.7	129.5	0.03365	110.7196	'GREAT BEND TAP - SEWARD 115KV CKT 1'
13G	03ALL	'FROM->TO'	'HARPER - MILAN TAP 138KV CKT 1'	95.6	95.6	0.03001	140.6728	'GREAT BEND TAP - SEWARD 115KV CKT 1'
13G	03ALL	'FROM->TO'	'HARPER - MILAN TAP 138KV CKT 1'	95.6	95.6	0.06401	140.6728	'GREAT BEND TAP - SEWARD 115KV CKT 1'
13G	03ALL	'FROM->TO'	'HARPER - MILAN TAP 138KV CKT 1'	95.6	95.6	0.11013	140.6728	'GREAT BEND TAP - SEWARD 115KV CKT 1'
13G	03ALL	'FROM->TO'	'HARPER - MILAN TAP 138KV CKT 1'	95.6	95.6	0.04437	140.6728	'GREAT BEND TAP - SEWARD 115KV CKT 1'
13G	03ALL	'FROM->TO'	'HARPER - MILAN TAP 138KV CKT 1'	95.6	95.6	0.04437	140.6728	'GREAT BEND TAP - SEWARD 115KV CKT 1'
13G	03ALL	'FROM->TO'	'HARPER - MILAN TAP 138KV CKT 1'	95.6	95.6	0.22106	140.6728	'GREAT BEND TAP - SEWARD 115KV CKT 1'
13G	03ALL	'FROM->TO'	'HARPER - MILAN TAP 138KV CKT 1'	95.6	95.6	0.03432	140.6728	'GREAT BEND TAP - SEWARD 115KV CKT 1'
13G	03ALL	'FROM->TO'	'HARPER - MILAN TAP 138KV CKT 1'	95.6	95.6	0.03595	140.6728	'GREAT BEND TAP - SEWARD 115KV CKT 1'
13G	03ALL	'FROM->TO'	'HARPER - MILAN TAP 138KV CKT 1'	95.6	95.6	0.03595	140.6728	'GREAT BEND TAP - SEWARD 115KV CKT 1'
13G	03ALL	'FROM->TO'	'HARPER - MILAN TAP 138KV CKT 1'	95.6	95.6	0.54719	140.6728	'GREAT BEND TAP - SEWARD 115KV CKT 1'
13G	03ALL	'FROM->TO'	'HARPER - MILAN TAP 138KV CKT 1'	95.6	95.6	0.03381	140.6728	'GREAT BEND TAP - SEWARD 115KV CKT 1'

SEASON	GROUP	DIRECTION	MONITORED ELEMENT	RATE A (MVA)	RATE B (MVA)	TDF	TC%LOADING (%MVA)	CONTINGENCY NAME
13G	03ALL	'FROM->TO'	'HARPER - MILAN TAP 138KV CKT 1'	95.6	95.6	0.03882	140.6728	'GREAT BEND TAP - SEWARD 115KV CKT 1'
13G	03ALL	'FROM->TO'	'HARPER - MILAN TAP 138KV CKT 1'	95.6	95.6	0.03302	140.6728	'GREAT BEND TAP - SEWARD 115KV CKT 1'
13G	03ALL	'FROM->TO'	'SMOKYHL6 230.00 - SUMMIT 230KV CKT 1'	319	319	0.1894	110.2066	'HARPER - MILAN TAP 138KV CKT 1'
13G	03ALL	'FROM->TO'	'SMOKYHL6 230.00 - SUMMIT 230KV CKT 1'	319	319	0.09662	110.2066	'HARPER - MILAN TAP 138KV CKT 1'
13G	03ALL	'FROM->TO'	'SMOKYHL6 230.00 - SUMMIT 230KV CKT 1'	319	319	0.11518	110.2066	'HARPER - MILAN TAP 138KV CKT 1'
13G	03ALL	'FROM->TO'	'SMOKYHL6 230.00 - SUMMIT 230KV CKT 1'	319	319	0.12757	110.2066	'HARPER - MILAN TAP 138KV CKT 1'
13G	03ALL	'FROM->TO'	'SMOKYHL6 230.00 - SUMMIT 230KV CKT 1'	319	319	0.12757	110.2066	'HARPER - MILAN TAP 138KV CKT 1'
13G	03ALL	'FROM->TO'	'SMOKYHL6 230.00 - SUMMIT 230KV CKT 1'	319	319	0.10116	110.2066	'HARPER - MILAN TAP 138KV CKT 1'
13G	03ALL	'FROM->TO'	'SMOKYHL6 230.00 - SUMMIT 230KV CKT 1'	319	319	0.10403	110.2066	'HARPER - MILAN TAP 138KV CKT 1'
13G	03ALL	'FROM->TO'	'SMOKYHL6 230.00 - SUMMIT 230KV CKT 1'	319	319	0.11941	110.2066	'HARPER - MILAN TAP 138KV CKT 1'
13G	03ALL	'FROM->TO'	'SMOKYHL6 230.00 - SUMMIT 230KV CKT 1'	319	319	0.11941	110.2066	'HARPER - MILAN TAP 138KV CKT 1'
13G	03ALL	'FROM->TO'	'SMOKYHL6 230.00 - SUMMIT 230KV CKT 1'	319	319	0.62817	110.2066	'HARPER - MILAN TAP 138KV CKT 1'
13G	03ALL	'FROM->TO'	'SMOKYHL6 230.00 - SUMMIT 230KV CKT 1'	319	319	0.07765	110.2066	'HARPER - MILAN TAP 138KV CKT 1'
13G	03ALL	'FROM->TO'	'SMOKYHL6 230.00 - SUMMIT 230KV CKT 1'	319	319	0.10397	110.2066	'HARPER - MILAN TAP 138KV CKT 1'
13G	03ALL	'FROM->TO'	'SMOKYHL6 230.00 - SUMMIT 230KV CKT 1'	319	319	0.13209	110.2066	'HARPER - MILAN TAP 138KV CKT 1'
13G	03ALL	'FROM->TO'	'SMOKYHL6 230.00 - SUMMIT 230KV CKT 1'	319	319	0.10657	110.2066	'HARPER - MILAN TAP 138KV CKT 1'
13G	03ALL	'FROM->TO'	'HUNTSVILLE - HUTCHINSON ENERGY CENTER 115KV CKT 1	68	68	0.03692	111.9735	'HARPER - MILAN TAP 138KV CKT 1'
13G	03ALL	'FROM->TO'	'HUNTSVILLE - HUTCHINSON ENERGY CENTER 115KV CKT 1	68	68	0.09576	111.9735	'HARPER - MILAN TAP 138KV CKT 1'
13G	03ALL	'FROM->TO'	'HUNTSVILLE - HUTCHINSON ENERGY CENTER 115KV CKT 1	68	68	0.08418	111.9735	'HARPER - MILAN TAP 138KV CKT 1'
13G	03ALL	'FROM->TO'	'HUNTSVILLE - HUTCHINSON ENERGY CENTER 115KV CKT 1	68	68	0.04613	111.9735	'HARPER - MILAN TAP 138KV CKT 1'
13G	03ALL	'FROM->TO'	'HUNTSVILLE - HUTCHINSON ENERGY CENTER 115KV CKT 1	68	68	0.04613	111.9735	'HARPER - MILAN TAP 138KV CKT 1'
13G	03ALL	'FROM->TO'	'HUNTSVILLE - HUTCHINSON ENERGY CENTER 115KV CKT 1	68	68	0.14951	111.9735	'HARPER - MILAN TAP 138KV CKT 1'
13G	03ALL	'FROM->TO'	'HUNTSVILLE - HUTCHINSON ENERGY CENTER 115KV CKT 1	68	68	0.03819	111.9735	'HARPER - MILAN TAP 138KV CKT 1'
13G	03ALL	'FROM->TO'	'HUNTSVILLE - HUTCHINSON ENERGY CENTER 115KV CKT 1	68	68	0.03804	111.9735	'HARPER - MILAN TAP 138KV CKT 1'
13G	03ALL	'FROM->TO'	'HUNTSVILLE - HUTCHINSON ENERGY CENTER 115KV CKT 1	68	68	0.03804	111.9735	'HARPER - MILAN TAP 138KV CKT 1'
13G	03ALL	'FROM->TO'	'HUNTSVILLE - HUTCHINSON ENERGY CENTER 115KV CKT 1	68	68	0.25947	111.9735	'HARPER - MILAN TAP 138KV CKT 1'
13G	03ALL	'FROM->TO'	'HUNTSVILLE - HUTCHINSON ENERGY CENTER 115KV CKT 1	68	68	0.03723	111.9735	'HARPER - MILAN TAP 138KV CKT 1'
13G	03ALL	'FROM->TO'	'HUNTSVILLE - HUTCHINSON ENERGY CENTER 115KV CKT 1	68	68	0.0409	111.9735	'HARPER - MILAN TAP 138KV CKT 1'
13G	03ALL	'FROM->TO'	'HUNTSVILLE - HUTCHINSON ENERGY CENTER 115KV CKT 1	68	68	0.03512	111.9735	'HARPER - MILAN TAP 138KV CKT 1'
13G	03ALL	'FROM->TO'	'ST JOHN - ST_JOHN 115KV CKT 1'	86	86	0.03692	126.2249	'HARPER - MILAN TAP 138KV CKT 1'
13G	03ALL	'FROM->TO'	'ST JOHN - ST_JOHN 115KV CKT 1'	86	86	0.09576	126.2249	'HARPER - MILAN TAP 138KV CKT 1'
13G	03ALL	'FROM->TO'	'ST JOHN - ST_JOHN 115KV CKT 1'	86	86	0.08418	126.2249	'HARPER - MILAN TAP 138KV CKT 1'
13G	03ALL	'FROM->TO'	'ST JOHN - ST_JOHN 115KV CKT 1'	86	86	0.04613	126.2249	'HARPER - MILAN TAP 138KV CKT 1'
13G	03ALL	'FROM->TO'	'ST JOHN - ST_JOHN 115KV CKT 1'	86	86	0.04613	126.2249	'HARPER - MILAN TAP 138KV CKT 1'
13G	03ALL	'FROM->TO'	'ST JOHN - ST_JOHN 115KV CKT 1'	86	86	0.14951	126.2249	'HARPER - MILAN TAP 138KV CKT 1'
13G	03ALL	'FROM->TO'	'ST JOHN - ST_JOHN 115KV CKT 1'	86	86	0.03819	126.2249	'HARPER - MILAN TAP 138KV CKT 1'
13G	03ALL	'FROM->TO'	'ST JOHN - ST_JOHN 115KV CKT 1'	86	86	0.03804	126.2249	'HARPER - MILAN TAP 138KV CKT 1'
13G	03ALL	'FROM->TO'	'ST JOHN - ST_JOHN 115KV CKT 1'	86	86	0.03804	126.2249	'HARPER - MILAN TAP 138KV CKT 1'
13G	03ALL	'FROM->TO'	'ST JOHN - ST_JOHN 115KV CKT 1'	86	86	0.25947	126.2249	'HARPER - MILAN TAP 138KV CKT 1'
13G	03ALL	'FROM->TO'	'ST JOHN - ST_JOHN 115KV CKT 1'	86	86	0.03723	126.2249	'HARPER - MILAN TAP 138KV CKT 1'
13G	03ALL	'FROM->TO'	'ST JOHN - ST_JOHN 115KV CKT 1'	86	86	0.0409	126.2249	'HARPER - MILAN TAP 138KV CKT 1'
13G	03ALL	'FROM->TO'	'ST JOHN - ST_JOHN 115KV CKT 1'	86	86	0.03512	126.2249	'HARPER - MILAN TAP 138KV CKT 1'
13G	03ALL	'TO->FROM'	'CLEARWATER - MILAN TAP 138KV CKT 1'	110	110	0.06361	109.9951	'JUDSON LARGE - SSTARTP3 115.00 115KV CKT 1'
13G	03ALL	'TO->FROM'	'CLEARWATER - MILAN TAP 138KV CKT 1'	110	110	0.48686	109.9951	'JUDSON LARGE - SSTARTP3 115.00 115KV CKT 1'
13G	03ALL	'TO->FROM'	'CLEARWATER - MILAN TAP 138KV CKT 1'	110	110	0.60821	109.9951	'JUDSON LARGE - SSTARTP3 115.00 115KV CKT 1'
13G	03ALL	'FROM->TO'	'HARPER - MILAN TAP 138KV CKT 1'	95.6	95.6	0.06361	134.0766	'JUDSON LARGE - SSTARTP3 115.00 115KV CKT 1'
13G	03ALL	'FROM->TO'	'HARPER - MILAN TAP 138KV CKT 1'	95.6	95.6	0.48686	134.0766	'JUDSON LARGE - SSTARTP3 115.00 115KV CKT 1'
13G	03ALL	'FROM->TO'	'HARPER - MILAN TAP 138KV CKT 1'	95.6	95.6	0.60821	134.0766	'JUDSON LARGE - SSTARTP3 115.00 115KV CKT 1'
13G	03ALL	'TO->FROM'	'CLEARWATER - MILAN TAP 138KV CKT 1'	110	110	0.03057	130.4215	'JUDSON LARGE - NORTH JUDSON LARGE SUB 115KV CKT 1'
13G	03ALL	'TO->FROM'	'CLEARWATER - MILAN TAP 138KV CKT 1'	110	110	0.06148	130.4215	'JUDSON LARGE - NORTH JUDSON LARGE SUB 115KV CKT 1'
13G	03ALL	'TO->FROM'	'CLEARWATER - MILAN TAP 138KV CKT 1'	110	110	0.03366	130.4215	'JUDSON LARGE - NORTH JUDSON LARGE SUB 115KV CKT 1'
13G	03ALL	'TO->FROM'	'CLEARWATER - MILAN TAP 138KV CKT 1'	110	110	0.03366	130.4215	'JUDSON LARGE - NORTH JUDSON LARGE SUB 115KV CKT 1'
13G	03ALL	'TO->FROM'	'CLEARWATER - MILAN TAP 138KV CKT 1'	110	110	0.03366	130.4215	'JUDSON LARGE - NORTH JUDSON LARGE SUB 115KV CKT 1'
13G	03ALL	'TO->FROM'	'CLEARWATER - MILAN TAP 138KV CKT 1'	110	110	0.31319	130.4215	'JUDSON LARGE - NORTH JUDSON LARGE SUB 115KV CKT 1'
13G	03ALL	'TO->FROM'	'CLEARWATER - MILAN TAP 138KV CKT 1'	110	110	0.03829	130.4215	'JUDSON LARGE - NORTH JUDSON LARGE SUB 115KV CKT 1'
13G	03ALL	'TO->FROM'	'CLEARWATER - MILAN TAP 138KV CKT 1'	110	110	0.03309	130.4215	'JUDSON LARGE - NORTH JUDSON LARGE SUB 115KV CKT 1'
13G	03ALL	'TO->FROM'	'CLEARWATER - MILAN TAP 138KV CKT 1'	110	110	0.03309	130.4215	'JUDSON LARGE - NORTH JUDSON LARGE SUB 115KV CKT 1'
13G	03ALL	'TO->FROM'	'CLEARWATER - MILAN TAP 138KV CKT 1'	110	110	0.55629	130.4215	'JUDSON LARGE - NORTH JUDSON LARGE SUB 115KV CKT 1'
13G	03ALL	'TO->FROM'	'CLEARWATER - MILAN TAP 138KV CKT 1'	110	110	0.03801	130.4215	'JUDSON LARGE - NORTH JUDSON LARGE SUB 115KV CKT 1'
13G	03ALL	'TO->FROM'	'CLEARWATER - MILAN TAP 138KV CKT 1'	110	110	0.03238	130.4215	'JUDSON LARGE - NORTH JUDSON LARGE SUB 115KV CKT 1'
13G	03ALL	'TO->FROM'	'CLEARWATER - MILAN TAP 138KV CKT 1'	110	110	0.03375	130.4215	'JUDSON LARGE - NORTH JUDSON LARGE SUB 115KV CKT 1'
13G	03ALL	'FROM->TO'	'GREENSBURG - SUN CITY 115KV CKT 1'	120.7	129.5	0.62627	115.8624	'JUDSON LARGE - NORTH JUDSON LARGE SUB 115KV CKT 1'
13G	03ALL	'FROM->TO'	'GREENSBURG - SUN CITY 115KV CKT 1'	120.7	129.5	0.03158	115.8624	'JUDSON LARGE - NORTH JUDSON LARGE SUB 115KV CKT 1'
13G	03ALL	'FROM->TO'	'GREENSBURG - SUN CITY 115KV CKT 1'	120.7	129.5	0.03227	115.8624	'JUDSON LARGE - NORTH JUDSON LARGE SUB 115KV CKT 1'

SEASON	GROUP	DIRECTION	MONITORED ELEMENT	RATE A (MVA)	RATE B (MVA)	TDF	TC%LOADING (%MVA)	CONTINGENCY NAME
13G	03ALL	'TO->FROM'	'GREENSBURG - SSTARTP3 115.00 115KV CKT 1	120.7	129.5	0.62627	123.7657	'JUDSON LARGE - NORTH JUDSON LARGE SUB 115KV CKT 1'
13G	03ALL	'TO->FROM'	'GREENSBURG - SSTARTP3 115.00 115KV CKT 1	120.7	129.5	0.03158	123.7657	'JUDSON LARGE - NORTH JUDSON LARGE SUB 115KV CKT 1'
13G	03ALL	'TO->FROM'	'GREENSBURG - SSTARTP3 115.00 115KV CKT 1	120.7	129.5	0.03227	123.7657	'JUDSON LARGE - NORTH JUDSON LARGE SUB 115KV CKT 1'
13G	03ALL	'FROM->TO'	'HARPER - MILAN TAP 138KV CKT 1'	95.6	95.6	0.03057	157.2361	'JUDSON LARGE - NORTH JUDSON LARGE SUB 115KV CKT 1'
13G	03ALL	'FROM->TO'	'HARPER - MILAN TAP 138KV CKT 1'	95.6	95.6	0.06148	157.2361	'JUDSON LARGE - NORTH JUDSON LARGE SUB 115KV CKT 1'
13G	03ALL	'FROM->TO'	'HARPER - MILAN TAP 138KV CKT 1'	95.6	95.6	0.03366	157.2361	'JUDSON LARGE - NORTH JUDSON LARGE SUB 115KV CKT 1'
13G	03ALL	'FROM->TO'	'HARPER - MILAN TAP 138KV CKT 1'	95.6	95.6	0.03366	157.2361	'JUDSON LARGE - NORTH JUDSON LARGE SUB 115KV CKT 1'
13G	03ALL	'FROM->TO'	'HARPER - MILAN TAP 138KV CKT 1'	95.6	95.6	0.03366	157.2361	'JUDSON LARGE - NORTH JUDSON LARGE SUB 115KV CKT 1'
13G	03ALL	'FROM->TO'	'HARPER - MILAN TAP 138KV CKT 1'	95.6	95.6	0.31319	157.2361	'JUDSON LARGE - NORTH JUDSON LARGE SUB 115KV CKT 1'
13G	03ALL	'FROM->TO'	'HARPER - MILAN TAP 138KV CKT 1'	95.6	95.6	0.03829	157.2361	'JUDSON LARGE - NORTH JUDSON LARGE SUB 115KV CKT 1'
13G	03ALL	'FROM->TO'	'HARPER - MILAN TAP 138KV CKT 1'	95.6	95.6	0.03309	157.2361	'JUDSON LARGE - NORTH JUDSON LARGE SUB 115KV CKT 1'
13G	03ALL	'FROM->TO'	'HARPER - MILAN TAP 138KV CKT 1'	95.6	95.6	0.03309	157.2361	'JUDSON LARGE - NORTH JUDSON LARGE SUB 115KV CKT 1'
13G	03ALL	'FROM->TO'	'HARPER - MILAN TAP 138KV CKT 1'	95.6	95.6	0.55629	157.2361	'JUDSON LARGE - NORTH JUDSON LARGE SUB 115KV CKT 1'
13G	03ALL	'FROM->TO'	'HARPER - MILAN TAP 138KV CKT 1'	95.6	95.6	0.03801	157.2361	'JUDSON LARGE - NORTH JUDSON LARGE SUB 115KV CKT 1'
13G	03ALL	'FROM->TO'	'HARPER - MILAN TAP 138KV CKT 1'	95.6	95.6	0.03238	157.2361	'JUDSON LARGE - NORTH JUDSON LARGE SUB 115KV CKT 1'
13G	03ALL	'FROM->TO'	'HARPER - MILAN TAP 138KV CKT 1'	95.6	95.6	0.03375	157.2361	'JUDSON LARGE - NORTH JUDSON LARGE SUB 115KV CKT 1'
13G	03ALL	'TO->FROM'	'MEDICINE LODGE - SUN CITY 115KV CKT 1'	120.7	129.5	0.62627	113.2648	'JUDSON LARGE - NORTH JUDSON LARGE SUB 115KV CKT 1'
13G	03ALL	'TO->FROM'	'MEDICINE LODGE - SUN CITY 115KV CKT 1'	120.7	129.5	0.03158	113.2648	'JUDSON LARGE - NORTH JUDSON LARGE SUB 115KV CKT 1'
13G	03ALL	'TO->FROM'	'MEDICINE LODGE - SUN CITY 115KV CKT 1'	120.7	129.5	0.03227	113.2648	'JUDSON LARGE - NORTH JUDSON LARGE SUB 115KV CKT 1'
13G	03ALL	'TO->FROM'	'BARBER 3 115.00 - MEDICINE LODGE 115KV CKT 1'	79.7	79.7	0.39081	111.7233	'JUDSON LARGE - NORTH JUDSON LARGE SUB 115KV CKT 1'
13G	03ALL	'TO->FROM'	'GREENSBURG - SSTARTP3 115.00 115KV CKT 1	120.7	129.5	0.20786	104.2413	'G08-79T 115.00 - JUDSON LARGE 115KV CKT 1
13G	03ALL	'TO->FROM'	'GREENSBURG - SSTARTP3 115.00 115KV CKT 1	120.7	129.5	0.0484	104.2413	'G08-79T 115.00 - JUDSON LARGE 115KV CKT 1
13G	03ALL	'TO->FROM'	'GREENSBURG - SSTARTP3 115.00 115KV CKT 1	120.7	129.5	0.0484	104.2413	'G08-79T 115.00 - JUDSON LARGE 115KV CKT 1
13G	03ALL	'TO->FROM'	'GREENSBURG - SSTARTP3 115.00 115KV CKT 1	120.7	129.5	0.42177	104.2413	'G08-79T 115.00 - JUDSON LARGE 115KV CKT 1
13G	03ALL	'TO->FROM'	'GREENSBURG - SSTARTP3 115.00 115KV CKT 1	120.7	129.5	0.03253	104.2413	'G08-79T 115.00 - JUDSON LARGE 115KV CKT 1
13G	03ALL	'TO->FROM'	'GREENSBURG - SSTARTP3 115.00 115KV CKT 1	120.7	129.5	0.03253	104.2413	'G08-79T 115.00 - JUDSON LARGE 115KV CKT 1
13G	03ALL	'TO->FROM'	'GREENSBURG - SSTARTP3 115.00 115KV CKT 1	120.7	129.5	0.03819	104.2413	'G08-79T 115.00 - JUDSON LARGE 115KV CKT 1
13G	03ALL	'FROM->TO'	'SMOKYHL6 230.00 - SUMMIT 230KV CKT 1'	319	319	0.18709	109.1903	'MEDICINE LODGE - SUN CITY 115KV CKT 1'
13G	03ALL	'FROM->TO'	'SMOKYHL6 230.00 - SUMMIT 230KV CKT 1'	319	319	0.08944	109.1903	'MEDICINE LODGE - SUN CITY 115KV CKT 1'
13G	03ALL	'FROM->TO'	'SMOKYHL6 230.00 - SUMMIT 230KV CKT 1'	319	319	0.12342	109.1903	'MEDICINE LODGE - SUN CITY 115KV CKT 1'
13G	03ALL	'FROM->TO'	'SMOKYHL6 230.00 - SUMMIT 230KV CKT 1'	319	319	0.12733	109.1903	'MEDICINE LODGE - SUN CITY 115KV CKT 1'
13G	03ALL	'FROM->TO'	'SMOKYHL6 230.00 - SUMMIT 230KV CKT 1'	319	319	0.12733	109.1903	'MEDICINE LODGE - SUN CITY 115KV CKT 1'
13G	03ALL	'FROM->TO'	'SMOKYHL6 230.00 - SUMMIT 230KV CKT 1'	319	319	0.12337	109.1903	'MEDICINE LODGE - SUN CITY 115KV CKT 1'
13G	03ALL	'FROM->TO'	'SMOKYHL6 230.00 - SUMMIT 230KV CKT 1'	319	319	0.1033	109.1903	'MEDICINE LODGE - SUN CITY 115KV CKT 1'
13G	03ALL	'FROM->TO'	'SMOKYHL6 230.00 - SUMMIT 230KV CKT 1'	319	319	0.11896	109.1903	'MEDICINE LODGE - SUN CITY 115KV CKT 1'
13G	03ALL	'FROM->TO'	'SMOKYHL6 230.00 - SUMMIT 230KV CKT 1'	319	319	0.11896	109.1903	'MEDICINE LODGE - SUN CITY 115KV CKT 1'
13G	03ALL	'FROM->TO'	'SMOKYHL6 230.00 - SUMMIT 230KV CKT 1'	319	319	0.62668	109.1903	'MEDICINE LODGE - SUN CITY 115KV CKT 1'
13G	03ALL	'FROM->TO'	'SMOKYHL6 230.00 - SUMMIT 230KV CKT 1'	319	319	0.10331	109.1903	'MEDICINE LODGE - SUN CITY 115KV CKT 1'
13G	03ALL	'FROM->TO'	'SMOKYHL6 230.00 - SUMMIT 230KV CKT 1'	319	319	0.1316	109.1903	'MEDICINE LODGE - SUN CITY 115KV CKT 1'
13G	03ALL	'FROM->TO'	'SMOKYHL6 230.00 - SUMMIT 230KV CKT 1'	319	319	0.10616	109.1903	'MEDICINE LODGE - SUN CITY 115KV CKT 1'
13G	03ALL	'FROM->TO'	'SEWARD - ST JOHN 115KV CKT 1'	80.3	80.3	0.05397	125.8406	'MEDICINE LODGE - SUN CITY 115KV CKT 1'
13G	03ALL	'FROM->TO'	'SEWARD - ST JOHN 115KV CKT 1'	80.3	80.3	0.14296	125.8406	'MEDICINE LODGE - SUN CITY 115KV CKT 1'
13G	03ALL	'FROM->TO'	'SEWARD - ST JOHN 115KV CKT 1'	80.3	80.3	0.05135	125.8406	'MEDICINE LODGE - SUN CITY 115KV CKT 1'
13G	03ALL	'FROM->TO'	'SEWARD - ST JOHN 115KV CKT 1'	80.3	80.3	0.05321	125.8406	'MEDICINE LODGE - SUN CITY 115KV CKT 1'
13G	03ALL	'FROM->TO'	'SEWARD - ST JOHN 115KV CKT 1'	80.3	80.3	0.05321	125.8406	'MEDICINE LODGE - SUN CITY 115KV CKT 1'
13G	03ALL	'FROM->TO'	'SEWARD - ST JOHN 115KV CKT 1'	80.3	80.3	0.05132	125.8406	'MEDICINE LODGE - SUN CITY 115KV CKT 1'
13G	03ALL	'FROM->TO'	'SEWARD - ST JOHN 115KV CKT 1'	80.3	80.3	0.04667	125.8406	'MEDICINE LODGE - SUN CITY 115KV CKT 1'
13G	03ALL	'FROM->TO'	'SEWARD - ST JOHN 115KV CKT 1'	80.3	80.3	0.04522	125.8406	'MEDICINE LODGE - SUN CITY 115KV CKT 1'
13G	03ALL	'FROM->TO'	'SEWARD - ST JOHN 115KV CKT 1'	80.3	80.3	0.04522	125.8406	'MEDICINE LODGE - SUN CITY 115KV CKT 1'
13G	03ALL	'FROM->TO'	'SEWARD - ST JOHN 115KV CKT 1'	80.3	80.3	0.04525	125.8406	'MEDICINE LODGE - SUN CITY 115KV CKT 1'
13G	03ALL	'FROM->TO'	'SEWARD - ST JOHN 115KV CKT 1'	80.3	80.3	0.04869	125.8406	'MEDICINE LODGE - SUN CITY 115KV CKT 1'
13G	03ALL	'FROM->TO'	'SEWARD - ST JOHN 115KV CKT 1'	80.3	80.3	0.04169	125.8406	'MEDICINE LODGE - SUN CITY 115KV CKT 1'
13G	03ALL	'FROM->TO'	'NORTH JUDSON LARGE SUB - SPEARVILLE 115KV CKT 1'	165.1	177.7	0.79233	121.02	'MEDICINE LODGE - SUN CITY 115KV CKT 1'
13G	03ALL	'FROM->TO'	'NORTH JUDSON LARGE SUB - SPEARVILLE 115KV CKT 1'	165.1	177.7	0.78977	121.02	'MEDICINE LODGE - SUN CITY 115KV CKT 1'
13G	03ALL	'FROM->TO'	'SPEARVILLE (SPEARVL6) 230/115/13.8KV TRANSFORMER CKT 1	205	205	0.79233	100.7158	'MEDICINE LODGE - SUN CITY 115KV CKT 1'
13G	03ALL	'FROM->TO'	'SPEARVILLE (SPEARVL6) 230/115/13.8KV TRANSFORMER CKT 1	205	205	0.78977	100.7158	'MEDICINE LODGE - SUN CITY 115KV CKT 1'
13G	03ALL	'TO->FROM'	'CLEARWATER - MILAN TAP 138KV CKT 1'	110	110	0.0348	119.66	'BARBER 3 115.00 - MEDICINE LODGE 115KV CKT 1'
13G	03ALL	'TO->FROM'	'CLEARWATER - MILAN TAP 138KV CKT 1'	110	110	0.06145	119.66	'BARBER 3 115.00 - MEDICINE LODGE 115KV CKT 1'
13G	03ALL	'TO->FROM'	'CLEARWATER - MILAN TAP 138KV CKT 1'	110	110	0.10294	119.66	'BARBER 3 115.00 - MEDICINE LODGE 115KV CKT 1'
13G	03ALL	'TO->FROM'	'CLEARWATER - MILAN TAP 138KV CKT 1'	110	110	0.04677	119.66	'BARBER 3 115.00 - MEDICINE LODGE 115KV CKT 1'
13G	03ALL	'TO->FROM'	'CLEARWATER - MILAN TAP 138KV CKT 1'	110	110	0.04677	119.66	'BARBER 3 115.00 - MEDICINE LODGE 115KV CKT 1'
13G	03ALL	'TO->FROM'	'CLEARWATER - MILAN TAP 138KV CKT 1'	110	110	0.19831	119.66	'BARBER 3 115.00 - MEDICINE LODGE 115KV CKT 1'
13G	03ALL	'TO->FROM'	'CLEARWATER - MILAN TAP 138KV CKT 1'	110	110	0.03635	119.66	'BARBER 3 115.00 - MEDICINE LODGE 115KV CKT 1'
13G	03ALL	'TO->FROM'	'CLEARWATER - MILAN TAP 138KV CKT 1'	110	110	0.03809	119.66	'BARBER 3 115.00 - MEDICINE LODGE 115KV CKT 1'

SEASON	GROUP	DIRECTION	MONITORED ELEMENT	RATE A (MVA)	RATE B (MVA)	TDF	TC%LOADING (%MVA)	CONTINGENCY NAME
13G	03ALL	'TO->FROM'	'CLEARWATER - MILAN TAP 138KV CKT 1'	110	110	0.03809	119.66	'BARBER 3 115.00 - MEDICINE LODGE 115KV CKT 1'
13G	03ALL	'TO->FROM'	'CLEARWATER - MILAN TAP 138KV CKT 1'	110	110	0.53746	119.66	'BARBER 3 115.00 - MEDICINE LODGE 115KV CKT 1'
13G	03ALL	'TO->FROM'	'CLEARWATER - MILAN TAP 138KV CKT 1'	110	110	0.03578	119.66	'BARBER 3 115.00 - MEDICINE LODGE 115KV CKT 1'
13G	03ALL	'TO->FROM'	'CLEARWATER - MILAN TAP 138KV CKT 1'	110	110	0.04124	119.66	'BARBER 3 115.00 - MEDICINE LODGE 115KV CKT 1'
13G	03ALL	'TO->FROM'	'CLEARWATER - MILAN TAP 138KV CKT 1'	110	110	0.03488	119.66	'BARBER 3 115.00 - MEDICINE LODGE 115KV CKT 1'
13G	03ALL	'TO->FROM'	'GREENSBURG - SSTARTP3 115.00 115KV CKT 1	120.7	129.5	0.17151	103.8968	'BARBER 3 115.00 - MEDICINE LODGE 115KV CKT 1'
13G	03ALL	'TO->FROM'	'GREENSBURG - SSTARTP3 115.00 115KV CKT 1	120.7	129.5	0.04291	103.8968	'BARBER 3 115.00 - MEDICINE LODGE 115KV CKT 1'
13G	03ALL	'TO->FROM'	'GREENSBURG - SSTARTP3 115.00 115KV CKT 1	120.7	129.5	0.04291	103.8968	'BARBER 3 115.00 - MEDICINE LODGE 115KV CKT 1'
13G	03ALL	'TO->FROM'	'GREENSBURG - SSTARTP3 115.00 115KV CKT 1	120.7	129.5	0.38597	103.8968	'BARBER 3 115.00 - MEDICINE LODGE 115KV CKT 1'
13G	03ALL	'TO->FROM'	'GREENSBURG - SSTARTP3 115.00 115KV CKT 1	120.7	129.5	0.0327	103.8968	'BARBER 3 115.00 - MEDICINE LODGE 115KV CKT 1'
13G	03ALL	'TO->FROM'	'GREENSBURG - SSTARTP3 115.00 115KV CKT 1	120.7	129.5	0.0327	103.8968	'BARBER 3 115.00 - MEDICINE LODGE 115KV CKT 1'
13G	03ALL	'TO->FROM'	'GREENSBURG - SSTARTP3 115.00 115KV CKT 1	120.7	129.5	0.03538	103.8968	'BARBER 3 115.00 - MEDICINE LODGE 115KV CKT 1'
13G	03ALL	'TO->FROM'	'GREENSBURG - SSTARTP3 115.00 115KV CKT 1	120.7	129.5	0.02996	103.8968	'BARBER 3 115.00 - MEDICINE LODGE 115KV CKT 1'
13G	03ALL	'FROM->TO'	'HARPER - MILAN TAP 138KV CKT 1'	95.6	95.6	0.0348	145.0654	'BARBER 3 115.00 - MEDICINE LODGE 115KV CKT 1'
13G	03ALL	'FROM->TO'	'HARPER - MILAN TAP 138KV CKT 1'	95.6	95.6	0.06145	145.0654	'BARBER 3 115.00 - MEDICINE LODGE 115KV CKT 1'
13G	03ALL	'FROM->TO'	'HARPER - MILAN TAP 138KV CKT 1'	95.6	95.6	0.10294	145.0654	'BARBER 3 115.00 - MEDICINE LODGE 115KV CKT 1'
13G	03ALL	'FROM->TO'	'HARPER - MILAN TAP 138KV CKT 1'	95.6	95.6	0.04677	145.0654	'BARBER 3 115.00 - MEDICINE LODGE 115KV CKT 1'
13G	03ALL	'FROM->TO'	'HARPER - MILAN TAP 138KV CKT 1'	95.6	95.6	0.04677	145.0654	'BARBER 3 115.00 - MEDICINE LODGE 115KV CKT 1'
13G	03ALL	'FROM->TO'	'HARPER - MILAN TAP 138KV CKT 1'	95.6	95.6	0.19831	145.0654	'BARBER 3 115.00 - MEDICINE LODGE 115KV CKT 1'
13G	03ALL	'FROM->TO'	'HARPER - MILAN TAP 138KV CKT 1'	95.6	95.6	0.03635	145.0654	'BARBER 3 115.00 - MEDICINE LODGE 115KV CKT 1'
13G	03ALL	'FROM->TO'	'HARPER - MILAN TAP 138KV CKT 1'	95.6	95.6	0.03809	145.0654	'BARBER 3 115.00 - MEDICINE LODGE 115KV CKT 1'
13G	03ALL	'FROM->TO'	'HARPER - MILAN TAP 138KV CKT 1'	95.6	95.6	0.03809	145.0654	'BARBER 3 115.00 - MEDICINE LODGE 115KV CKT 1'
13G	03ALL	'FROM->TO'	'HARPER - MILAN TAP 138KV CKT 1'	95.6	95.6	0.53746	145.0654	'BARBER 3 115.00 - MEDICINE LODGE 115KV CKT 1'
13G	03ALL	'FROM->TO'	'HARPER - MILAN TAP 138KV CKT 1'	95.6	95.6	0.03578	145.0654	'BARBER 3 115.00 - MEDICINE LODGE 115KV CKT 1'
13G	03ALL	'FROM->TO'	'HARPER - MILAN TAP 138KV CKT 1'	95.6	95.6	0.04124	145.0654	'BARBER 3 115.00 - MEDICINE LODGE 115KV CKT 1'
13G	03ALL	'FROM->TO'	'HARPER - MILAN TAP 138KV CKT 1'	95.6	95.6	0.03488	145.0654	'BARBER 3 115.00 - MEDICINE LODGE 115KV CKT 1'
13G	03ALL	'FROM->TO'	'MEDICINE LODGE (MED-LDG4) 138/115/2.72KV TRANSFORMER CKT 1'	56	65	0.10422	100.8623	'BARBER 3 115.00 - MEDICINE LODGE 115KV CKT 1'
13G	03ALL	'FROM->TO'	'MEDICINE LODGE (MED-LDG4) 138/115/2.72KV TRANSFORMER CKT 1'	56	65	0.03484	100.8623	'BARBER 3 115.00 - MEDICINE LODGE 115KV CKT 1'
13G	03ALL	'FROM->TO'	'MEDICINE LODGE (MED-LDG4) 138/115/2.72KV TRANSFORMER CKT 1'	56	65	0.03484	100.8623	'BARBER 3 115.00 - MEDICINE LODGE 115KV CKT 1'
13G	03ALL	'FROM->TO'	'MEDICINE LODGE (MED-LDG4) 138/115/2.72KV TRANSFORMER CKT 1'	56	65	0.22061	100.8623	'BARBER 3 115.00 - MEDICINE LODGE 115KV CKT 1'
13G	03ALL	'FROM->TO'	'SMOKYHL6 230.00 - SUMMIT 230KV CKT 1'	319	319	0.18318	109.0015	'MULLERGREN - SPEARVILLE 230KV CKT 1'
13G	03ALL	'FROM->TO'	'SMOKYHL6 230.00 - SUMMIT 230KV CKT 1'	319	319	0.08398	109.0015	'MULLERGREN - SPEARVILLE 230KV CKT 1'
13G	03ALL	'FROM->TO'	'SMOKYHL6 230.00 - SUMMIT 230KV CKT 1'	319	319	0.11077	109.0015	'MULLERGREN - SPEARVILLE 230KV CKT 1'
13G	03ALL	'FROM->TO'	'SMOKYHL6 230.00 - SUMMIT 230KV CKT 1'	319	319	0.13275	109.0015	'MULLERGREN - SPEARVILLE 230KV CKT 1'
13G	03ALL	'FROM->TO'	'SMOKYHL6 230.00 - SUMMIT 230KV CKT 1'	319	319	0.13275	109.0015	'MULLERGREN - SPEARVILLE 230KV CKT 1'
13G	03ALL	'FROM->TO'	'SMOKYHL6 230.00 - SUMMIT 230KV CKT 1'	319	319	0.08239	109.0015	'MULLERGREN - SPEARVILLE 230KV CKT 1'
13G	03ALL	'FROM->TO'	'SMOKYHL6 230.00 - SUMMIT 230KV CKT 1'	319	319	0.10361	109.0015	'MULLERGREN - SPEARVILLE 230KV CKT 1'
13G	03ALL	'FROM->TO'	'SMOKYHL6 230.00 - SUMMIT 230KV CKT 1'	319	319	0.12134	109.0015	'MULLERGREN - SPEARVILLE 230KV CKT 1'
13G	03ALL	'FROM->TO'	'SMOKYHL6 230.00 - SUMMIT 230KV CKT 1'	319	319	0.12134	109.0015	'MULLERGREN - SPEARVILLE 230KV CKT 1'
13G	03ALL	'FROM->TO'	'SMOKYHL6 230.00 - SUMMIT 230KV CKT 1'	319	319	0.62504	109.0015	'MULLERGREN - SPEARVILLE 230KV CKT 1'
13G	03ALL	'FROM->TO'	'SMOKYHL6 230.00 - SUMMIT 230KV CKT 1'	319	319	0.1036	109.0015	'MULLERGREN - SPEARVILLE 230KV CKT 1'
13G	03ALL	'FROM->TO'	'SMOKYHL6 230.00 - SUMMIT 230KV CKT 1'	319	319	0.13494	109.0015	'MULLERGREN - SPEARVILLE 230KV CKT 1'
13G	03ALL	'FROM->TO'	'SMOKYHL6 230.00 - SUMMIT 230KV CKT 1'	319	319	0.10756	109.0015	'MULLERGREN - SPEARVILLE 230KV CKT 1'
13G	03ALL	'FROM->TO'	'GREENSBURG - SUN CITY 115KV CKT 1'	120.7	129.5	0.19013	112.5337	'MULLERGREN - SPEARVILLE 230KV CKT 1'
13G	03ALL	'FROM->TO'	'GREENSBURG - SUN CITY 115KV CKT 1'	120.7	129.5	0.06233	112.5337	'MULLERGREN - SPEARVILLE 230KV CKT 1'
13G	03ALL	'FROM->TO'	'GREENSBURG - SUN CITY 115KV CKT 1'	120.7	129.5	0.06233	112.5337	'MULLERGREN - SPEARVILLE 230KV CKT 1'
13G	03ALL	'FROM->TO'	'GREENSBURG - SUN CITY 115KV CKT 1'	120.7	129.5	0.40635	112.5337	'MULLERGREN - SPEARVILLE 230KV CKT 1'
13G	03ALL	'FROM->TO'	'GREENSBURG - SUN CITY 115KV CKT 1'	120.7	129.5	0.03611	112.5337	'MULLERGREN - SPEARVILLE 230KV CKT 1'
13G	03ALL	'FROM->TO'	'GREENSBURG - SUN CITY 115KV CKT 1'	120.7	129.5	0.0446	112.5337	'MULLERGREN - SPEARVILLE 230KV CKT 1'
13G	03ALL	'FROM->TO'	'GREENSBURG - SUN CITY 115KV CKT 1'	120.7	129.5	0.0446	112.5337	'MULLERGREN - SPEARVILLE 230KV CKT 1'
13G	03ALL	'FROM->TO'	'GREENSBURG - SUN CITY 115KV CKT 1'	120.7	129.5	0.03617	112.5337	'MULLERGREN - SPEARVILLE 230KV CKT 1'
13G	03ALL	'FROM->TO'	'GREENSBURG - SUN CITY 115KV CKT 1'	120.7	129.5	0.04956	112.5337	'MULLERGREN - SPEARVILLE 230KV CKT 1'
13G	03ALL	'FROM->TO'	'GREENSBURG - SUN CITY 115KV CKT 1'	120.7	129.5	0.03958	112.5337	'MULLERGREN - SPEARVILLE 230KV CKT 1'
13G	03ALL	'TO->FROM'	'GREENSBURG - SSTARTP3 115.00 115KV CKT 1	120.7	129.5	0.19013	120.4086	'MULLERGREN - SPEARVILLE 230KV CKT 1'
13G	03ALL	'TO->FROM'	'GREENSBURG - SSTARTP3 115.00 115KV CKT 1	120.7	129.5	0.06233	120.4086	'MULLERGREN - SPEARVILLE 230KV CKT 1'
13G	03ALL	'TO->FROM'	'GREENSBURG - SSTARTP3 115.00 115KV CKT 1	120.7	129.5	0.06233	120.4086	'MULLERGREN - SPEARVILLE 230KV CKT 1'
13G	03ALL	'TO->FROM'	'GREENSBURG - SSTARTP3 115.00 115KV CKT 1	120.7	129.5	0.40635	120.4086	'MULLERGREN - SPEARVILLE 230KV CKT 1'
13G	03ALL	'TO->FROM'	'GREENSBURG - SSTARTP3 115.00 115KV CKT 1	120.7	129.5	0.03611	120.4086	'MULLERGREN - SPEARVILLE 230KV CKT 1'
13G	03ALL	'TO->FROM'	'GREENSBURG - SSTARTP3 115.00 115KV CKT 1	120.7	129.5	0.0446	120.4086	'MULLERGREN - SPEARVILLE 230KV CKT 1'
13G	03ALL	'TO->FROM'	'GREENSBURG - SSTARTP3 115.00 115KV CKT 1	120.7	129.5	0.0446	120.4086	'MULLERGREN - SPEARVILLE 230KV CKT 1'
13G	03ALL	'TO->FROM'	'GREENSBURG - SSTARTP3 115.00 115KV CKT 1	120.7	129.5	0.03617	120.4086	'MULLERGREN - SPEARVILLE 230KV CKT 1'
13G	03ALL	'TO->FROM'	'GREENSBURG - SSTARTP3 115.00 115KV CKT 1	120.7	129.5	0.04956	120.4086	'MULLERGREN - SPEARVILLE 230KV CKT 1'
13G	03ALL	'TO->FROM'	'GREENSBURG - SSTARTP3 115.00 115KV CKT 1	120.7	129.5	0.03958	120.4086	'MULLERGREN - SPEARVILLE 230KV CKT 1'
13G	03ALL	'TO->FROM'	'MEDICINE LODGE - SUN CITY 115KV CKT 1'	120.7	129.5	0.19013	109.9624	'MULLERGREN - SPEARVILLE 230KV CKT 1'

SEASON	GROUP	DIRECTION	MONITORED ELEMENT	RATE A (MVA)	RATE B (MVA)	TDF	TC%LOADING (%MVA)	CONTINGENCY NAME
13G	03ALL	'TO->FROM'	'MEDICINE LODGE - SUN CITY 115KV CKT 1'	120.7	129.5	0.06233	109.9624	'MULLERGREN - SPEARVILLE 230KV CKT 1'
13G	03ALL	'TO->FROM'	'MEDICINE LODGE - SUN CITY 115KV CKT 1'	120.7	129.5	0.06233	109.9624	'MULLERGREN - SPEARVILLE 230KV CKT 1'
13G	03ALL	'TO->FROM'	'MEDICINE LODGE - SUN CITY 115KV CKT 1'	120.7	129.5	0.40635	109.9624	'MULLERGREN - SPEARVILLE 230KV CKT 1'
13G	03ALL	'TO->FROM'	'MEDICINE LODGE - SUN CITY 115KV CKT 1'	120.7	129.5	0.03611	109.9624	'MULLERGREN - SPEARVILLE 230KV CKT 1'
13G	03ALL	'TO->FROM'	'MEDICINE LODGE - SUN CITY 115KV CKT 1'	120.7	129.5	0.0446	109.9624	'MULLERGREN - SPEARVILLE 230KV CKT 1'
13G	03ALL	'TO->FROM'	'MEDICINE LODGE - SUN CITY 115KV CKT 1'	120.7	129.5	0.0446	109.9624	'MULLERGREN - SPEARVILLE 230KV CKT 1'
13G	03ALL	'TO->FROM'	'MEDICINE LODGE - SUN CITY 115KV CKT 1'	120.7	129.5	0.03617	109.9624	'MULLERGREN - SPEARVILLE 230KV CKT 1'
13G	03ALL	'TO->FROM'	'MEDICINE LODGE - SUN CITY 115KV CKT 1'	120.7	129.5	0.04956	109.9624	'MULLERGREN - SPEARVILLE 230KV CKT 1'
13G	03ALL	'TO->FROM'	'MEDICINE LODGE - SUN CITY 115KV CKT 1'	120.7	129.5	0.03958	109.9624	'MULLERGREN - SPEARVILLE 230KV CKT 1'
13G	03ALL	'TO->FROM'	'BARBER 3 115.00 - MEDICINE LODGE 115KV CKT 1'	79.7	79.7	0.12237	106.3389	'MULLERGREN - SPEARVILLE 230KV CKT 1'
13G	03ALL	'TO->FROM'	'BARBER 3 115.00 - MEDICINE LODGE 115KV CKT 1'	79.7	79.7	0.0437	106.3389	'MULLERGREN - SPEARVILLE 230KV CKT 1'
13G	03ALL	'TO->FROM'	'BARBER 3 115.00 - MEDICINE LODGE 115KV CKT 1'	79.7	79.7	0.0437	106.3389	'MULLERGREN - SPEARVILLE 230KV CKT 1'
13G	03ALL	'TO->FROM'	'BARBER 3 115.00 - MEDICINE LODGE 115KV CKT 1'	79.7	79.7	0.25557	106.3389	'MULLERGREN - SPEARVILLE 230KV CKT 1'
13G	03ALL	'TO->FROM'	'BARBER 3 115.00 - MEDICINE LODGE 115KV CKT 1'	79.7	79.7	0.03251	106.3389	'MULLERGREN - SPEARVILLE 230KV CKT 1'
13G	03ALL	'TO->FROM'	'BARBER 3 115.00 - MEDICINE LODGE 115KV CKT 1'	79.7	79.7	0.03251	106.3389	'MULLERGREN - SPEARVILLE 230KV CKT 1'
13G	03ALL	'TO->FROM'	'BARBER 3 115.00 - MEDICINE LODGE 115KV CKT 1'	79.7	79.7	0.03583	106.3389	'MULLERGREN - SPEARVILLE 230KV CKT 1'
13G	03ALL	'FROM->TO'	'SPEARVILLE (SPEARVL) 345/230/13.8KV TRANSFORMER CKT 1	336	336	0.63384	101.5806	'MULLERGREN - SPEARVILLE 230KV CKT 1'
13G	03ALL	'FROM->TO'	'SPEARVILLE (SPEARVL) 345/230/13.8KV TRANSFORMER CKT 1	336	336	0.90468	101.5806	'MULLERGREN - SPEARVILLE 230KV CKT 1'
13G	03ALL	'FROM->TO'	'SPEARVILLE (SPEARVL) 345/230/13.8KV TRANSFORMER CKT 1	336	336	0.90468	101.5806	'MULLERGREN - SPEARVILLE 230KV CKT 1'
13G	03ALL	'FROM->TO'	'SPEARVILLE (SPEARVL) 345/230/13.8KV TRANSFORMER CKT 1	336	336	0.46026	101.5806	'MULLERGREN - SPEARVILLE 230KV CKT 1'
13G	03ALL	'FROM->TO'	'SPEARVILLE (SPEARVL) 345/230/13.8KV TRANSFORMER CKT 1	336	336	0.13134	101.5806	'MULLERGREN - SPEARVILLE 230KV CKT 1'
13G	03ALL	'FROM->TO'	'SPEARVILLE (SPEARVL) 345/230/13.8KV TRANSFORMER CKT 1	336	336	0.63384	101.2482	'MULLERGREN - SPEARVILLE 230KV CKT 1'
13G	03ALL	'FROM->TO'	'SPEARVILLE (SPEARVL) 345/230/13.8KV TRANSFORMER CKT 1	336	336	0.90468	101.2482	'MULLERGREN - SPEARVILLE 230KV CKT 1'
13G	03ALL	'FROM->TO'	'SPEARVILLE (SPEARVL) 345/230/13.8KV TRANSFORMER CKT 1	336	336	0.90468	101.2482	'MULLERGREN - SPEARVILLE 230KV CKT 1'
13G	03ALL	'FROM->TO'	'SPEARVILLE (SPEARVL) 345/230/13.8KV TRANSFORMER CKT 1	336	336	0.46026	101.2482	'MULLERGREN - SPEARVILLE 230KV CKT 1'
13G	03ALL	'FROM->TO'	'SPEARVILLE (SPEARVL) 345/230/13.8KV TRANSFORMER CKT 1	336	336	0.13134	101.2482	'MULLERGREN - SPEARVILLE 230KV CKT 1'
13G	03ALL	'FROM->TO'	'SMOKYHL6 230.00 - SUMMIT 230KV CKT 1'	319	319	0.19121	106.4337	'PHILLIPSBURG - SMITH CENTER 115KV CKT 1'
13G	03ALL	'FROM->TO'	'SMOKYHL6 230.00 - SUMMIT 230KV CKT 1'	319	319	0.0907	106.4337	'PHILLIPSBURG - SMITH CENTER 115KV CKT 1'
13G	03ALL	'FROM->TO'	'SMOKYHL6 230.00 - SUMMIT 230KV CKT 1'	319	319	0.10654	106.4337	'PHILLIPSBURG - SMITH CENTER 115KV CKT 1'
13G	03ALL	'FROM->TO'	'SMOKYHL6 230.00 - SUMMIT 230KV CKT 1'	319	319	0.12599	106.4337	'PHILLIPSBURG - SMITH CENTER 115KV CKT 1'
13G	03ALL	'FROM->TO'	'SMOKYHL6 230.00 - SUMMIT 230KV CKT 1'	319	319	0.12599	106.4337	'PHILLIPSBURG - SMITH CENTER 115KV CKT 1'
13G	03ALL	'FROM->TO'	'SMOKYHL6 230.00 - SUMMIT 230KV CKT 1'	319	319	0.08028	106.4337	'PHILLIPSBURG - SMITH CENTER 115KV CKT 1'
13G	03ALL	'FROM->TO'	'SMOKYHL6 230.00 - SUMMIT 230KV CKT 1'	319	319	0.10453	106.4337	'PHILLIPSBURG - SMITH CENTER 115KV CKT 1'
13G	03ALL	'FROM->TO'	'SMOKYHL6 230.00 - SUMMIT 230KV CKT 1'	319	319	0.11929	106.4337	'PHILLIPSBURG - SMITH CENTER 115KV CKT 1'
13G	03ALL	'FROM->TO'	'SMOKYHL6 230.00 - SUMMIT 230KV CKT 1'	319	319	0.11929	106.4337	'PHILLIPSBURG - SMITH CENTER 115KV CKT 1'
13G	03ALL	'FROM->TO'	'SMOKYHL6 230.00 - SUMMIT 230KV CKT 1'	319	319	0.62843	106.4337	'PHILLIPSBURG - SMITH CENTER 115KV CKT 1'
13G	03ALL	'FROM->TO'	'SMOKYHL6 230.00 - SUMMIT 230KV CKT 1'	319	319	0.10502	106.4337	'PHILLIPSBURG - SMITH CENTER 115KV CKT 1'
13G	03ALL	'FROM->TO'	'SMOKYHL6 230.00 - SUMMIT 230KV CKT 1'	319	319	0.13152	106.4337	'PHILLIPSBURG - SMITH CENTER 115KV CKT 1'
13G	03ALL	'FROM->TO'	'SMOKYHL6 230.00 - SUMMIT 230KV CKT 1'	319	319	0.1069	106.4337	'PHILLIPSBURG - SMITH CENTER 115KV CKT 1'
13G	03ALL	'FROM->TO'	'SMOKYHL6 230.00 - SUMMIT 230KV CKT 1'	319	319	0.19136	107.4788	'SEWARD - ST JOHN 115KV CKT 1'
13G	03ALL	'FROM->TO'	'SMOKYHL6 230.00 - SUMMIT 230KV CKT 1'	319	319	0.10713	107.4788	'SEWARD - ST JOHN 115KV CKT 1'
13G	03ALL	'FROM->TO'	'SMOKYHL6 230.00 - SUMMIT 230KV CKT 1'	319	319	0.10153	107.4788	'SEWARD - ST JOHN 115KV CKT 1'
13G	03ALL	'FROM->TO'	'SMOKYHL6 230.00 - SUMMIT 230KV CKT 1'	319	319	0.12666	107.4788	'SEWARD - ST JOHN 115KV CKT 1'
13G	03ALL	'FROM->TO'	'SMOKYHL6 230.00 - SUMMIT 230KV CKT 1'	319	319	0.12666	107.4788	'SEWARD - ST JOHN 115KV CKT 1'
13G	03ALL	'FROM->TO'	'SMOKYHL6 230.00 - SUMMIT 230KV CKT 1'	319	319	0.06643	107.4788	'SEWARD - ST JOHN 115KV CKT 1'
13G	03ALL	'FROM->TO'	'SMOKYHL6 230.00 - SUMMIT 230KV CKT 1'	319	319	0.10419	107.4788	'SEWARD - ST JOHN 115KV CKT 1'
13G	03ALL	'FROM->TO'	'SMOKYHL6 230.00 - SUMMIT 230KV CKT 1'	319	319	0.11901	107.4788	'SEWARD - ST JOHN 115KV CKT 1'
13G	03ALL	'FROM->TO'	'SMOKYHL6 230.00 - SUMMIT 230KV CKT 1'	319	319	0.11901	107.4788	'SEWARD - ST JOHN 115KV CKT 1'
13G	03ALL	'FROM->TO'	'SMOKYHL6 230.00 - SUMMIT 230KV CKT 1'	319	319	0.62805	107.4788	'SEWARD - ST JOHN 115KV CKT 1'
13G	03ALL	'FROM->TO'	'SMOKYHL6 230.00 - SUMMIT 230KV CKT 1'	319	319	0.10401	107.4788	'SEWARD - ST JOHN 115KV CKT 1'
13G	03ALL	'FROM->TO'	'SMOKYHL6 230.00 - SUMMIT 230KV CKT 1'	319	319	0.13162	107.4788	'SEWARD - ST JOHN 115KV CKT 1'
13G	03ALL	'FROM->TO'	'SMOKYHL6 230.00 - SUMMIT 230KV CKT 1'	319	319	0.10623	107.4788	'SEWARD - ST JOHN 115KV CKT 1'
13G	03ALL	'TO->FROM'	'CLEARWATER - MILAN TAP 138KV CKT 1'	110	110	0.11217	108.2477	'SEWARD - ST JOHN 115KV CKT 1'
13G	03ALL	'TO->FROM'	'CLEARWATER - MILAN TAP 138KV CKT 1'	110	110	0.03912	108.2477	'SEWARD - ST JOHN 115KV CKT 1'
13G	03ALL	'TO->FROM'	'CLEARWATER - MILAN TAP 138KV CKT 1'	110	110	0.03912	108.2477	'SEWARD - ST JOHN 115KV CKT 1'
13G	03ALL	'TO->FROM'	'CLEARWATER - MILAN TAP 138KV CKT 1'	110	110	0.23492	108.2477	'SEWARD - ST JOHN 115KV CKT 1'
13G	03ALL	'TO->FROM'	'CLEARWATER - MILAN TAP 138KV CKT 1'	110	110	0.03111	108.2477	'SEWARD - ST JOHN 115KV CKT 1'
13G	03ALL	'TO->FROM'	'CLEARWATER - MILAN TAP 138KV CKT 1'	110	110	0.03111	108.2477	'SEWARD - ST JOHN 115KV CKT 1'
13G	03ALL	'TO->FROM'	'CLEARWATER - MILAN TAP 138KV CKT 1'	110	110	0.57325	108.2477	'SEWARD - ST JOHN 115KV CKT 1'
13G	03ALL	'TO->FROM'	'CLEARWATER - MILAN TAP 138KV CKT 1'	110	110	0.03375	108.2477	'SEWARD - ST JOHN 115KV CKT 1'
13G	03ALL	'FROM->TO'	'GREENSBURG - SUN CITY 115KV CKT 1'	120.7	129.5	0.17466	107.9651	'SEWARD - ST JOHN 115KV CKT 1'
13G	03ALL	'FROM->TO'	'GREENSBURG - SUN CITY 115KV CKT 1'	120.7	129.5	0.05203	107.9651	'SEWARD - ST JOHN 115KV CKT 1'
13G	03ALL	'FROM->TO'	'GREENSBURG - SUN CITY 115KV CKT 1'	120.7	129.5	0.05203	107.9651	'SEWARD - ST JOHN 115KV CKT 1'
13G	03ALL	'FROM->TO'	'GREENSBURG - SUN CITY 115KV CKT 1'	120.7	129.5	0.37981	107.9651	'SEWARD - ST JOHN 115KV CKT 1'

SEASON	GROUP	DIRECTION	MONITORED ELEMENT	RATE A (MVA)	RATE B (MVA)	TDF	TC%LOADING (%MVA)	CONTINGENCY NAME
13G	03ALL	'FROM->TO'	'GREENSBURG - SUN CITY 115KV CKT 1'	120.7	129.5	0.037	107.9651	'SEWARD - ST JOHN 115KV CKT 1'
13G	03ALL	'FROM->TO'	'GREENSBURG - SUN CITY 115KV CKT 1'	120.7	129.5	0.04061	107.9651	'SEWARD - ST JOHN 115KV CKT 1'
13G	03ALL	'FROM->TO'	'GREENSBURG - SUN CITY 115KV CKT 1'	120.7	129.5	0.04061	107.9651	'SEWARD - ST JOHN 115KV CKT 1'
13G	03ALL	'FROM->TO'	'GREENSBURG - SUN CITY 115KV CKT 1'	120.7	129.5	0.03677	107.9651	'SEWARD - ST JOHN 115KV CKT 1'
13G	03ALL	'FROM->TO'	'GREENSBURG - SUN CITY 115KV CKT 1'	120.7	129.5	0.04389	107.9651	'SEWARD - ST JOHN 115KV CKT 1'
13G	03ALL	'FROM->TO'	'GREENSBURG - SUN CITY 115KV CKT 1'	120.7	129.5	0.03726	107.9651	'SEWARD - ST JOHN 115KV CKT 1'
13G	03ALL	'TO->FROM'	'GREENSBURG - SSTARTP3 115.00 115KV CKT 1	120.7	129.5	0.17466	115.7864	'SEWARD - ST JOHN 115KV CKT 1'
13G	03ALL	'TO->FROM'	'GREENSBURG - SSTARTP3 115.00 115KV CKT 1	120.7	129.5	0.05203	115.7864	'SEWARD - ST JOHN 115KV CKT 1'
13G	03ALL	'TO->FROM'	'GREENSBURG - SSTARTP3 115.00 115KV CKT 1	120.7	129.5	0.05203	115.7864	'SEWARD - ST JOHN 115KV CKT 1'
13G	03ALL	'TO->FROM'	'GREENSBURG - SSTARTP3 115.00 115KV CKT 1	120.7	129.5	0.37981	115.7864	'SEWARD - ST JOHN 115KV CKT 1'
13G	03ALL	'TO->FROM'	'GREENSBURG - SSTARTP3 115.00 115KV CKT 1	120.7	129.5	0.037	115.7864	'SEWARD - ST JOHN 115KV CKT 1'
13G	03ALL	'TO->FROM'	'GREENSBURG - SSTARTP3 115.00 115KV CKT 1	120.7	129.5	0.04061	115.7864	'SEWARD - ST JOHN 115KV CKT 1'
13G	03ALL	'TO->FROM'	'GREENSBURG - SSTARTP3 115.00 115KV CKT 1	120.7	129.5	0.04061	115.7864	'SEWARD - ST JOHN 115KV CKT 1'
13G	03ALL	'TO->FROM'	'GREENSBURG - SSTARTP3 115.00 115KV CKT 1	120.7	129.5	0.03677	115.7864	'SEWARD - ST JOHN 115KV CKT 1'
13G	03ALL	'TO->FROM'	'GREENSBURG - SSTARTP3 115.00 115KV CKT 1	120.7	129.5	0.04389	115.7864	'SEWARD - ST JOHN 115KV CKT 1'
13G	03ALL	'TO->FROM'	'GREENSBURG - SSTARTP3 115.00 115KV CKT 1	120.7	129.5	0.03726	115.7864	'SEWARD - ST JOHN 115KV CKT 1'
13G	03ALL	'FROM->TO'	'HARPER - MILAN TAP 138KV CKT 1'	95.6	95.6	0.11217	131.8989	'SEWARD - ST JOHN 115KV CKT 1'
13G	03ALL	'FROM->TO'	'HARPER - MILAN TAP 138KV CKT 1'	95.6	95.6	0.03912	131.8989	'SEWARD - ST JOHN 115KV CKT 1'
13G	03ALL	'FROM->TO'	'HARPER - MILAN TAP 138KV CKT 1'	95.6	95.6	0.03912	131.8989	'SEWARD - ST JOHN 115KV CKT 1'
13G	03ALL	'FROM->TO'	'HARPER - MILAN TAP 138KV CKT 1'	95.6	95.6	0.23492	131.8989	'SEWARD - ST JOHN 115KV CKT 1'
13G	03ALL	'FROM->TO'	'HARPER - MILAN TAP 138KV CKT 1'	95.6	95.6	0.03111	131.8989	'SEWARD - ST JOHN 115KV CKT 1'
13G	03ALL	'FROM->TO'	'HARPER - MILAN TAP 138KV CKT 1'	95.6	95.6	0.03111	131.8989	'SEWARD - ST JOHN 115KV CKT 1'
13G	03ALL	'FROM->TO'	'HARPER - MILAN TAP 138KV CKT 1'	95.6	95.6	0.57325	131.8989	'SEWARD - ST JOHN 115KV CKT 1'
13G	03ALL	'FROM->TO'	'HARPER - MILAN TAP 138KV CKT 1'	95.6	95.6	0.03375	131.8989	'SEWARD - ST JOHN 115KV CKT 1'
13G	03ALL	'TO->FROM'	'MEDICINE LODGE - SUN CITY 115KV CKT 1'	120.7	129.5	0.17466	105.3867	'SEWARD - ST JOHN 115KV CKT 1'
13G	03ALL	'TO->FROM'	'MEDICINE LODGE - SUN CITY 115KV CKT 1'	120.7	129.5	0.05203	105.3867	'SEWARD - ST JOHN 115KV CKT 1'
13G	03ALL	'TO->FROM'	'MEDICINE LODGE - SUN CITY 115KV CKT 1'	120.7	129.5	0.05203	105.3867	'SEWARD - ST JOHN 115KV CKT 1'
13G	03ALL	'TO->FROM'	'MEDICINE LODGE - SUN CITY 115KV CKT 1'	120.7	129.5	0.37981	105.3867	'SEWARD - ST JOHN 115KV CKT 1'
13G	03ALL	'TO->FROM'	'MEDICINE LODGE - SUN CITY 115KV CKT 1'	120.7	129.5	0.037	105.3867	'SEWARD - ST JOHN 115KV CKT 1'
13G	03ALL	'TO->FROM'	'MEDICINE LODGE - SUN CITY 115KV CKT 1'	120.7	129.5	0.04061	105.3867	'SEWARD - ST JOHN 115KV CKT 1'
13G	03ALL	'TO->FROM'	'MEDICINE LODGE - SUN CITY 115KV CKT 1'	120.7	129.5	0.04061	105.3867	'SEWARD - ST JOHN 115KV CKT 1'
13G	03ALL	'TO->FROM'	'MEDICINE LODGE - SUN CITY 115KV CKT 1'	120.7	129.5	0.03677	105.3867	'SEWARD - ST JOHN 115KV CKT 1'
13G	03ALL	'TO->FROM'	'MEDICINE LODGE - SUN CITY 115KV CKT 1'	120.7	129.5	0.04389	105.3867	'SEWARD - ST JOHN 115KV CKT 1'
13G	03ALL	'TO->FROM'	'MEDICINE LODGE - SUN CITY 115KV CKT 1'	120.7	129.5	0.03726	105.3867	'SEWARD - ST JOHN 115KV CKT 1'
13G	03ALL	'FROM->TO'	'SMOKYHL6 230.00 - SUMMIT 230KV CKT 1'	319	319	0.18545	104.2022	'PECULIAR - STILWELL 345KV CKT 1'
13G	03ALL	'FROM->TO'	'SMOKYHL6 230.00 - SUMMIT 230KV CKT 1'	319	319	0.08971	104.2022	'PECULIAR - STILWELL 345KV CKT 1'
13G	03ALL	'FROM->TO'	'SMOKYHL6 230.00 - SUMMIT 230KV CKT 1'	319	319	0.10321	104.2022	'PECULIAR - STILWELL 345KV CKT 1'
13G	03ALL	'FROM->TO'	'SMOKYHL6 230.00 - SUMMIT 230KV CKT 1'	319	319	0.12223	104.2022	'PECULIAR - STILWELL 345KV CKT 1'
13G	03ALL	'FROM->TO'	'SMOKYHL6 230.00 - SUMMIT 230KV CKT 1'	319	319	0.12223	104.2022	'PECULIAR - STILWELL 345KV CKT 1'
13G	03ALL	'FROM->TO'	'SMOKYHL6 230.00 - SUMMIT 230KV CKT 1'	319	319	0.07792	104.2022	'PECULIAR - STILWELL 345KV CKT 1'
13G	03ALL	'FROM->TO'	'SMOKYHL6 230.00 - SUMMIT 230KV CKT 1'	319	319	0.09994	104.2022	'PECULIAR - STILWELL 345KV CKT 1'
13G	03ALL	'FROM->TO'	'SMOKYHL6 230.00 - SUMMIT 230KV CKT 1'	319	319	0.11509	104.2022	'PECULIAR - STILWELL 345KV CKT 1'
13G	03ALL	'FROM->TO'	'SMOKYHL6 230.00 - SUMMIT 230KV CKT 1'	319	319	0.11509	104.2022	'PECULIAR - STILWELL 345KV CKT 1'
13G	03ALL	'FROM->TO'	'SMOKYHL6 230.00 - SUMMIT 230KV CKT 1'	319	319	0.62616	104.2022	'PECULIAR - STILWELL 345KV CKT 1'
13G	03ALL	'FROM->TO'	'SMOKYHL6 230.00 - SUMMIT 230KV CKT 1'	319	319	0.09994	104.2022	'PECULIAR - STILWELL 345KV CKT 1'
13G	03ALL	'FROM->TO'	'SMOKYHL6 230.00 - SUMMIT 230KV CKT 1'	319	319	0.1274	104.2022	'PECULIAR - STILWELL 345KV CKT 1'
13G	03ALL	'FROM->TO'	'SMOKYHL6 230.00 - SUMMIT 230KV CKT 1'	319	319	0.10263	104.2022	'PECULIAR - STILWELL 345KV CKT 1'
13G	03ALL	'FROM->TO'	'SMOKYHL6 230.00 - SUMMIT 230KV CKT 1'	319	319	0.18603	102.6422	'EASTOWN7 345.00 - ST JOE 345KV CKT 1
13G	03ALL	'FROM->TO'	'SMOKYHL6 230.00 - SUMMIT 230KV CKT 1'	319	319	0.0901	102.6422	'EASTOWN7 345.00 - ST JOE 345KV CKT 1
13G	03ALL	'FROM->TO'	'SMOKYHL6 230.00 - SUMMIT 230KV CKT 1'	319	319	0.1038	102.6422	'EASTOWN7 345.00 - ST JOE 345KV CKT 1
13G	03ALL	'FROM->TO'	'SMOKYHL6 230.00 - SUMMIT 230KV CKT 1'	319	319	0.12293	102.6422	'EASTOWN7 345.00 - ST JOE 345KV CKT 1
13G	03ALL	'FROM->TO'	'SMOKYHL6 230.00 - SUMMIT 230KV CKT 1'	319	319	0.12293	102.6422	'EASTOWN7 345.00 - ST JOE 345KV CKT 1
13G	03ALL	'FROM->TO'	'SMOKYHL6 230.00 - SUMMIT 230KV CKT 1'	319	319	0.07828	102.6422	'EASTOWN7 345.00 - ST JOE 345KV CKT 1
13G	03ALL	'FROM->TO'	'SMOKYHL6 230.00 - SUMMIT 230KV CKT 1'	319	319	0.10085	102.6422	'EASTOWN7 345.00 - ST JOE 345KV CKT 1
13G	03ALL	'FROM->TO'	'SMOKYHL6 230.00 - SUMMIT 230KV CKT 1'	319	319	0.11591	102.6422	'EASTOWN7 345.00 - ST JOE 345KV CKT 1
13G	03ALL	'FROM->TO'	'SMOKYHL6 230.00 - SUMMIT 230KV CKT 1'	319	319	0.11591	102.6422	'EASTOWN7 345.00 - ST JOE 345KV CKT 1
13G	03ALL	'FROM->TO'	'SMOKYHL6 230.00 - SUMMIT 230KV CKT 1'	319	319	0.62581	102.6422	'EASTOWN7 345.00 - ST JOE 345KV CKT 1
13G	03ALL	'FROM->TO'	'SMOKYHL6 230.00 - SUMMIT 230KV CKT 1'	319	319	0.10088	102.6422	'EASTOWN7 345.00 - ST JOE 345KV CKT 1
13G	03ALL	'FROM->TO'	'SMOKYHL6 230.00 - SUMMIT 230KV CKT 1'	319	319	0.12817	102.6422	'EASTOWN7 345.00 - ST JOE 345KV CKT 1
13G	03ALL	'FROM->TO'	'SMOKYHL6 230.00 - SUMMIT 230KV CKT 1'	319	319	0.10349	102.6422	'EASTOWN7 345.00 - ST JOE 345KV CKT 1
13G	03ALL	'FROM->TO'	'SMOKYHL6 230.00 - SUMMIT 230KV CKT 1'	319	319	0.18637	107.9385	'HAWTHORN - ST JOE 345KV CKT 1'
13G	03ALL	'FROM->TO'	'SMOKYHL6 230.00 - SUMMIT 230KV CKT 1'	319	319	0.09051	107.9385	'HAWTHORN - ST JOE 345KV CKT 1'
13G	03ALL	'FROM->TO'	'SMOKYHL6 230.00 - SUMMIT 230KV CKT 1'	319	319	0.10403	107.9385	'HAWTHORN - ST JOE 345KV CKT 1'
13G	03ALL	'FROM->TO'	'SMOKYHL6 230.00 - SUMMIT 230KV CKT 1'	319	319	0.12313	107.9385	'HAWTHORN - ST JOE 345KV CKT 1'

SEASON	GROUP	DIRECTION	MONITORED ELEMENT	RATE A (MVA)	RATE B (MVA)	TDF	TC%LOADING (%MVA)	CONTINGENCY NAME
13G	03ALL	'FROM->TO'	'SMOKYHL6 230.00 - SUMMIT 230KV CKT 1'	319	319	0.12313	107.9385	'HAWTHORN - ST JOE 345KV CKT 1'
13G	03ALL	'FROM->TO'	'SMOKYHL6 230.00 - SUMMIT 230KV CKT 1'	319	319	0.07863	107.9385	'HAWTHORN - ST JOE 345KV CKT 1'
13G	03ALL	'FROM->TO'	'SMOKYHL6 230.00 - SUMMIT 230KV CKT 1'	319	319	0.10087	107.9385	'HAWTHORN - ST JOE 345KV CKT 1'
13G	03ALL	'FROM->TO'	'SMOKYHL6 230.00 - SUMMIT 230KV CKT 1'	319	319	0.116	107.9385	'HAWTHORN - ST JOE 345KV CKT 1'
13G	03ALL	'FROM->TO'	'SMOKYHL6 230.00 - SUMMIT 230KV CKT 1'	319	319	0.116	107.9385	'HAWTHORN - ST JOE 345KV CKT 1'
13G	03ALL	'FROM->TO'	'SMOKYHL6 230.00 - SUMMIT 230KV CKT 1'	319	319	0.62682	107.9385	'HAWTHORN - ST JOE 345KV CKT 1'
13G	03ALL	'FROM->TO'	'SMOKYHL6 230.00 - SUMMIT 230KV CKT 1'	319	319	0.10089	107.9385	'HAWTHORN - ST JOE 345KV CKT 1'
13G	03ALL	'FROM->TO'	'SMOKYHL6 230.00 - SUMMIT 230KV CKT 1'	319	319	0.12832	107.9385	'HAWTHORN - ST JOE 345KV CKT 1'
13G	03ALL	'FROM->TO'	'SMOKYHL6 230.00 - SUMMIT 230KV CKT 1'	319	319	0.10352	107.9385	'HAWTHORN - ST JOE 345KV CKT 1'
13G	03ALL	'FROM->TO'	'SMOKYHL6 230.00 - SUMMIT 230KV CKT 1'	319	319	0.1874	107.8845	'COOPER - ST JOE 345KV CKT 1'
13G	03ALL	'FROM->TO'	'SMOKYHL6 230.00 - SUMMIT 230KV CKT 1'	319	319	0.09123	107.8845	'COOPER - ST JOE 345KV CKT 1'
13G	03ALL	'FROM->TO'	'SMOKYHL6 230.00 - SUMMIT 230KV CKT 1'	319	319	0.10502	107.8845	'COOPER - ST JOE 345KV CKT 1'
13G	03ALL	'FROM->TO'	'SMOKYHL6 230.00 - SUMMIT 230KV CKT 1'	319	319	0.12431	107.8845	'COOPER - ST JOE 345KV CKT 1'
13G	03ALL	'FROM->TO'	'SMOKYHL6 230.00 - SUMMIT 230KV CKT 1'	319	319	0.12431	107.8845	'COOPER - ST JOE 345KV CKT 1'
13G	03ALL	'FROM->TO'	'SMOKYHL6 230.00 - SUMMIT 230KV CKT 1'	319	319	0.07922	107.8845	'COOPER - ST JOE 345KV CKT 1'
13G	03ALL	'FROM->TO'	'SMOKYHL6 230.00 - SUMMIT 230KV CKT 1'	319	319	0.10236	107.8845	'COOPER - ST JOE 345KV CKT 1'
13G	03ALL	'FROM->TO'	'SMOKYHL6 230.00 - SUMMIT 230KV CKT 1'	319	319	0.11734	107.8845	'COOPER - ST JOE 345KV CKT 1'
13G	03ALL	'FROM->TO'	'SMOKYHL6 230.00 - SUMMIT 230KV CKT 1'	319	319	0.11734	107.8845	'COOPER - ST JOE 345KV CKT 1'
13G	03ALL	'FROM->TO'	'SMOKYHL6 230.00 - SUMMIT 230KV CKT 1'	319	319	0.62652	107.8845	'COOPER - ST JOE 345KV CKT 1'
13G	03ALL	'FROM->TO'	'SMOKYHL6 230.00 - SUMMIT 230KV CKT 1'	319	319	0.10241	107.8845	'COOPER - ST JOE 345KV CKT 1'
13G	03ALL	'FROM->TO'	'SMOKYHL6 230.00 - SUMMIT 230KV CKT 1'	319	319	0.12961	107.8845	'COOPER - ST JOE 345KV CKT 1'
13G	03ALL	'FROM->TO'	'SMOKYHL6 230.00 - SUMMIT 230KV CKT 1'	319	319	0.10491	107.8845	'COOPER - ST JOE 345KV CKT 1'
13G	03ALL	'FROM->TO'	'SMOKYHL6 230.00 - SUMMIT 230KV CKT 1'	319	319	0.18967	103.9253	'AXTELL - SWEETWATER 345KV CKT 1'
13G	03ALL	'FROM->TO'	'SMOKYHL6 230.00 - SUMMIT 230KV CKT 1'	319	319	0.09133	103.9253	'AXTELL - SWEETWATER 345KV CKT 1'
13G	03ALL	'FROM->TO'	'SMOKYHL6 230.00 - SUMMIT 230KV CKT 1'	319	319	0.10519	103.9253	'AXTELL - SWEETWATER 345KV CKT 1'
13G	03ALL	'FROM->TO'	'SMOKYHL6 230.00 - SUMMIT 230KV CKT 1'	319	319	0.12477	103.9253	'AXTELL - SWEETWATER 345KV CKT 1'
13G	03ALL	'FROM->TO'	'SMOKYHL6 230.00 - SUMMIT 230KV CKT 1'	319	319	0.12477	103.9253	'AXTELL - SWEETWATER 345KV CKT 1'
13G	03ALL	'FROM->TO'	'SMOKYHL6 230.00 - SUMMIT 230KV CKT 1'	319	319	0.07978	103.9253	'AXTELL - SWEETWATER 345KV CKT 1'
13G	03ALL	'FROM->TO'	'SMOKYHL6 230.00 - SUMMIT 230KV CKT 1'	319	319	0.09932	103.9253	'AXTELL - SWEETWATER 345KV CKT 1'
13G	03ALL	'FROM->TO'	'SMOKYHL6 230.00 - SUMMIT 230KV CKT 1'	319	319	0.11645	103.9253	'AXTELL - SWEETWATER 345KV CKT 1'
13G	03ALL	'FROM->TO'	'SMOKYHL6 230.00 - SUMMIT 230KV CKT 1'	319	319	0.11645	103.9253	'AXTELL - SWEETWATER 345KV CKT 1'
13G	03ALL	'FROM->TO'	'SMOKYHL6 230.00 - SUMMIT 230KV CKT 1'	319	319	0.62889	103.9253	'AXTELL - SWEETWATER 345KV CKT 1'
13G	03ALL	'FROM->TO'	'SMOKYHL6 230.00 - SUMMIT 230KV CKT 1'	319	319	0.09912	103.9253	'AXTELL - SWEETWATER 345KV CKT 1'
13G	03ALL	'FROM->TO'	'SMOKYHL6 230.00 - SUMMIT 230KV CKT 1'	319	319	0.12996	103.9253	'AXTELL - SWEETWATER 345KV CKT 1'
13G	03ALL	'FROM->TO'	'SMOKYHL6 230.00 - SUMMIT 230KV CKT 1'	319	319	0.10277	103.9253	'AXTELL - SWEETWATER 345KV CKT 1'
13G	03ALL	'FROM->TO'	'SMOKYHL6 230.00 - SUMMIT 230KV CKT 1'	319	319	0.18631	106.2902	'COLUMWEST - KELLY 230KV CKT 1'
13G	03ALL	'FROM->TO'	'SMOKYHL6 230.00 - SUMMIT 230KV CKT 1'	319	319	0.09051	106.2902	'COLUMWEST - KELLY 230KV CKT 1'
13G	03ALL	'FROM->TO'	'SMOKYHL6 230.00 - SUMMIT 230KV CKT 1'	319	319	0.10405	106.2902	'COLUMWEST - KELLY 230KV CKT 1'
13G	03ALL	'FROM->TO'	'SMOKYHL6 230.00 - SUMMIT 230KV CKT 1'	319	319	0.12311	106.2902	'COLUMWEST - KELLY 230KV CKT 1'
13G	03ALL	'FROM->TO'	'SMOKYHL6 230.00 - SUMMIT 230KV CKT 1'	319	319	0.12311	106.2902	'COLUMWEST - KELLY 230KV CKT 1'
13G	03ALL	'FROM->TO'	'SMOKYHL6 230.00 - SUMMIT 230KV CKT 1'	319	319	0.07868	106.2902	'COLUMWEST - KELLY 230KV CKT 1'
13G	03ALL	'FROM->TO'	'SMOKYHL6 230.00 - SUMMIT 230KV CKT 1'	319	319	0.10088	106.2902	'COLUMWEST - KELLY 230KV CKT 1'
13G	03ALL	'FROM->TO'	'SMOKYHL6 230.00 - SUMMIT 230KV CKT 1'	319	319	0.11599	106.2902	'COLUMWEST - KELLY 230KV CKT 1'
13G	03ALL	'FROM->TO'	'SMOKYHL6 230.00 - SUMMIT 230KV CKT 1'	319	319	0.11599	106.2902	'COLUMWEST - KELLY 230KV CKT 1'
13G	03ALL	'FROM->TO'	'SMOKYHL6 230.00 - SUMMIT 230KV CKT 1'	319	319	0.6268	106.2902	'COLUMWEST - KELLY 230KV CKT 1'
13G	03ALL	'FROM->TO'	'SMOKYHL6 230.00 - SUMMIT 230KV CKT 1'	319	319	0.1009	106.2902	'COLUMWEST - KELLY 230KV CKT 1'
13G	03ALL	'FROM->TO'	'SMOKYHL6 230.00 - SUMMIT 230KV CKT 1'	319	319	0.1283	106.2902	'COLUMWEST - KELLY 230KV CKT 1'
13G	03ALL	'FROM->TO'	'SMOKYHL6 230.00 - SUMMIT 230KV CKT 1'	319	319	0.10353	106.2902	'COLUMWEST - KELLY 230KV CKT 1'
13G	03ALL	'FROM->TO'	'SMOKYHL6 230.00 - SUMMIT 230KV CKT 1'	319	319	0.18631	106.5965	'COLUMWEST - GRAND ISLAND 230KV CKT 1'
13G	03ALL	'FROM->TO'	'SMOKYHL6 230.00 - SUMMIT 230KV CKT 1'	319	319	0.09051	106.5965	'COLUMWEST - GRAND ISLAND 230KV CKT 1'
13G	03ALL	'FROM->TO'	'SMOKYHL6 230.00 - SUMMIT 230KV CKT 1'	319	319	0.10405	106.5965	'COLUMWEST - GRAND ISLAND 230KV CKT 1'
13G	03ALL	'FROM->TO'	'SMOKYHL6 230.00 - SUMMIT 230KV CKT 1'	319	319	0.12311	106.5965	'COLUMWEST - GRAND ISLAND 230KV CKT 1'
13G	03ALL	'FROM->TO'	'SMOKYHL6 230.00 - SUMMIT 230KV CKT 1'	319	319	0.12311	106.5965	'COLUMWEST - GRAND ISLAND 230KV CKT 1'
13G	03ALL	'FROM->TO'	'SMOKYHL6 230.00 - SUMMIT 230KV CKT 1'	319	319	0.07868	106.5965	'COLUMWEST - GRAND ISLAND 230KV CKT 1'
13G	03ALL	'FROM->TO'	'SMOKYHL6 230.00 - SUMMIT 230KV CKT 1'	319	319	0.10088	106.5965	'COLUMWEST - GRAND ISLAND 230KV CKT 1'
13G	03ALL	'FROM->TO'	'SMOKYHL6 230.00 - SUMMIT 230KV CKT 1'	319	319	0.11599	106.5965	'COLUMWEST - GRAND ISLAND 230KV CKT 1'
13G	03ALL	'FROM->TO'	'SMOKYHL6 230.00 - SUMMIT 230KV CKT 1'	319	319	0.11599	106.5965	'COLUMWEST - GRAND ISLAND 230KV CKT 1'
13G	03ALL	'FROM->TO'	'SMOKYHL6 230.00 - SUMMIT 230KV CKT 1'	319	319	0.6268	106.5965	'COLUMWEST - GRAND ISLAND 230KV CKT 1'
13G	03ALL	'FROM->TO'	'SMOKYHL6 230.00 - SUMMIT 230KV CKT 1'	319	319	0.1009	106.5965	'COLUMWEST - GRAND ISLAND 230KV CKT 1'
13G	03ALL	'FROM->TO'	'SMOKYHL6 230.00 - SUMMIT 230KV CKT 1'	319	319	0.1283	106.5965	'COLUMWEST - GRAND ISLAND 230KV CKT 1'
13G	03ALL	'FROM->TO'	'SMOKYHL6 230.00 - SUMMIT 230KV CKT 1'	319	319	0.10353	106.5965	'COLUMWEST - GRAND ISLAND 230KV CKT 1'
13G	03ALL	'FROM->TO'	'SMOKYHL6 230.00 - SUMMIT 230KV CKT 1'	319	319	0.18619	106.5609	'COOPER - SUB 3458 NEB CTY 345KV CKT 1
13G	03ALL	'FROM->TO'	'SMOKYHL6 230.00 - SUMMIT 230KV CKT 1'	319	319	0.09031	106.5609	'COOPER - SUB 3458 NEB CTY 345KV CKT 1
13G	03ALL	'FROM->TO'	'SMOKYHL6 230.00 - SUMMIT 230KV CKT 1'	319	319	0.10391	106.5609	'COOPER - SUB 3458 NEB CTY 345KV CKT 1

SEASON	GROUP	DIRECTION	MONITORED ELEMENT	RATE A (MVA)	RATE B (MVA)	TDF	TC%LOADING (%MVA)	CONTINGENCY NAME
13G	03ALL	'FROM->TO'	'SMOKYHL6 230.00 - SUMMIT 230KV CKT 1'	319	319	0.12302	106.5609	'COOPER - SUB 3458 NEB CTY 345KV CKT 1
13G	03ALL	'FROM->TO'	'SMOKYHL6 230.00 - SUMMIT 230KV CKT 1'	319	319	0.12302	106.5609	'COOPER - SUB 3458 NEB CTY 345KV CKT 1
13G	03ALL	'FROM->TO'	'SMOKYHL6 230.00 - SUMMIT 230KV CKT 1'	319	319	0.07846	106.5609	'COOPER - SUB 3458 NEB CTY 345KV CKT 1
13G	03ALL	'FROM->TO'	'SMOKYHL6 230.00 - SUMMIT 230KV CKT 1'	319	319	0.10085	106.5609	'COOPER - SUB 3458 NEB CTY 345KV CKT 1
13G	03ALL	'FROM->TO'	'SMOKYHL6 230.00 - SUMMIT 230KV CKT 1'	319	319	0.11594	106.5609	'COOPER - SUB 3458 NEB CTY 345KV CKT 1
13G	03ALL	'FROM->TO'	'SMOKYHL6 230.00 - SUMMIT 230KV CKT 1'	319	319	0.11594	106.5609	'COOPER - SUB 3458 NEB CTY 345KV CKT 1
13G	03ALL	'FROM->TO'	'SMOKYHL6 230.00 - SUMMIT 230KV CKT 1'	319	319	0.62637	106.5609	'COOPER - SUB 3458 NEB CTY 345KV CKT 1
13G	03ALL	'FROM->TO'	'SMOKYHL6 230.00 - SUMMIT 230KV CKT 1'	319	319	0.10087	106.5609	'COOPER - SUB 3458 NEB CTY 345KV CKT 1
13G	03ALL	'FROM->TO'	'SMOKYHL6 230.00 - SUMMIT 230KV CKT 1'	319	319	0.12823	106.5609	'COOPER - SUB 3458 NEB CTY 345KV CKT 1
13G	03ALL	'FROM->TO'	'SMOKYHL6 230.00 - SUMMIT 230KV CKT 1'	319	319	0.10348	106.5609	'COOPER - SUB 3458 NEB CTY 345KV CKT 1
13G	03ALL	'FROM->TO'	'SMOKYHL6 230.00 - SUMMIT 230KV CKT 1'	319	319	0.18791	107.2142	'MCCOOL - MOORE 345KV CKT 1'
13G	03ALL	'FROM->TO'	'SMOKYHL6 230.00 - SUMMIT 230KV CKT 1'	319	319	0.09196	107.2142	'MCCOOL - MOORE 345KV CKT 1'
13G	03ALL	'FROM->TO'	'SMOKYHL6 230.00 - SUMMIT 230KV CKT 1'	319	319	0.10567	107.2142	'MCCOOL - MOORE 345KV CKT 1'
13G	03ALL	'FROM->TO'	'SMOKYHL6 230.00 - SUMMIT 230KV CKT 1'	319	319	0.12487	107.2142	'MCCOOL - MOORE 345KV CKT 1'
13G	03ALL	'FROM->TO'	'SMOKYHL6 230.00 - SUMMIT 230KV CKT 1'	319	319	0.12487	107.2142	'MCCOOL - MOORE 345KV CKT 1'
13G	03ALL	'FROM->TO'	'SMOKYHL6 230.00 - SUMMIT 230KV CKT 1'	319	319	0.07998	107.2142	'MCCOOL - MOORE 345KV CKT 1'
13G	03ALL	'FROM->TO'	'SMOKYHL6 230.00 - SUMMIT 230KV CKT 1'	319	319	0.10303	107.2142	'MCCOOL - MOORE 345KV CKT 1'
13G	03ALL	'FROM->TO'	'SMOKYHL6 230.00 - SUMMIT 230KV CKT 1'	319	319	0.11792	107.2142	'MCCOOL - MOORE 345KV CKT 1'
13G	03ALL	'FROM->TO'	'SMOKYHL6 230.00 - SUMMIT 230KV CKT 1'	319	319	0.11792	107.2142	'MCCOOL - MOORE 345KV CKT 1'
13G	03ALL	'FROM->TO'	'SMOKYHL6 230.00 - SUMMIT 230KV CKT 1'	319	319	0.62754	107.2142	'MCCOOL - MOORE 345KV CKT 1'
13G	03ALL	'FROM->TO'	'SMOKYHL6 230.00 - SUMMIT 230KV CKT 1'	319	319	0.10309	107.2142	'MCCOOL - MOORE 345KV CKT 1'
13G	03ALL	'FROM->TO'	'SMOKYHL6 230.00 - SUMMIT 230KV CKT 1'	319	319	0.13014	107.2142	'MCCOOL - MOORE 345KV CKT 1'
13G	03ALL	'FROM->TO'	'SMOKYHL6 230.00 - SUMMIT 230KV CKT 1'	319	319	0.10554	107.2142	'MCCOOL - MOORE 345KV CKT 1'
13G	03ALL	'FROM->TO'	'SMOKYHL6 230.00 - SUMMIT 230KV CKT 1'	319	319	0.18636	104.0939	'103RD & ROKEBY - SUB 3458 NEB CTY 345KV CKT 1
13G	03ALL	'FROM->TO'	'SMOKYHL6 230.00 - SUMMIT 230KV CKT 1'	319	319	0.09053	104.0939	'103RD & ROKEBY - SUB 3458 NEB CTY 345KV CKT 1
13G	03ALL	'FROM->TO'	'SMOKYHL6 230.00 - SUMMIT 230KV CKT 1'	319	319	0.10407	104.0939	'103RD & ROKEBY - SUB 3458 NEB CTY 345KV CKT 1
13G	03ALL	'FROM->TO'	'SMOKYHL6 230.00 - SUMMIT 230KV CKT 1'	319	319	0.12314	104.0939	'103RD & ROKEBY - SUB 3458 NEB CTY 345KV CKT 1
13G	03ALL	'FROM->TO'	'SMOKYHL6 230.00 - SUMMIT 230KV CKT 1'	319	319	0.12314	104.0939	'103RD & ROKEBY - SUB 3458 NEB CTY 345KV CKT 1
13G	03ALL	'FROM->TO'	'SMOKYHL6 230.00 - SUMMIT 230KV CKT 1'	319	319	0.07871	104.0939	'103RD & ROKEBY - SUB 3458 NEB CTY 345KV CKT 1
13G	03ALL	'FROM->TO'	'SMOKYHL6 230.00 - SUMMIT 230KV CKT 1'	319	319	0.10087	104.0939	'103RD & ROKEBY - SUB 3458 NEB CTY 345KV CKT 1
13G	03ALL	'FROM->TO'	'SMOKYHL6 230.00 - SUMMIT 230KV CKT 1'	319	319	0.11601	104.0939	'103RD & ROKEBY - SUB 3458 NEB CTY 345KV CKT 1
13G	03ALL	'FROM->TO'	'SMOKYHL6 230.00 - SUMMIT 230KV CKT 1'	319	319	0.11601	104.0939	'103RD & ROKEBY - SUB 3458 NEB CTY 345KV CKT 1
13G	03ALL	'FROM->TO'	'SMOKYHL6 230.00 - SUMMIT 230KV CKT 1'	319	319	0.62682	104.0939	'103RD & ROKEBY - SUB 3458 NEB CTY 345KV CKT 1
13G	03ALL	'FROM->TO'	'SMOKYHL6 230.00 - SUMMIT 230KV CKT 1'	319	319	0.10088	104.0939	'103RD & ROKEBY - SUB 3458 NEB CTY 345KV CKT 1
13G	03ALL	'FROM->TO'	'SMOKYHL6 230.00 - SUMMIT 230KV CKT 1'	319	319	0.12833	104.0939	'103RD & ROKEBY - SUB 3458 NEB CTY 345KV CKT 1
13G	03ALL	'FROM->TO'	'SMOKYHL6 230.00 - SUMMIT 230KV CKT 1'	319	319	0.10353	104.0939	'103RD & ROKEBY - SUB 3458 NEB CTY 345KV CKT 1
13G	03ALL	'FROM->TO'	'SMOKYHL6 230.00 - SUMMIT 230KV CKT 1'	319	319	0.18586	106.7759	'STEGALL - WAYSIDE 230KV CKT 1'
13G	03ALL	'FROM->TO'	'SMOKYHL6 230.00 - SUMMIT 230KV CKT 1'	319	319	0.09019	106.7759	'STEGALL - WAYSIDE 230KV CKT 1'
13G	03ALL	'FROM->TO'	'SMOKYHL6 230.00 - SUMMIT 230KV CKT 1'	319	319	0.10368	106.7759	'STEGALL - WAYSIDE 230KV CKT 1'
13G	03ALL	'FROM->TO'	'SMOKYHL6 230.00 - SUMMIT 230KV CKT 1'	319	319	0.1227	106.7759	'STEGALL - WAYSIDE 230KV CKT 1'
13G	03ALL	'FROM->TO'	'SMOKYHL6 230.00 - SUMMIT 230KV CKT 1'	319	319	0.1227	106.7759	'STEGALL - WAYSIDE 230KV CKT 1'
13G	03ALL	'FROM->TO'	'SMOKYHL6 230.00 - SUMMIT 230KV CKT 1'	319	319	0.07838	106.7759	'STEGALL - WAYSIDE 230KV CKT 1'
13G	03ALL	'FROM->TO'	'SMOKYHL6 230.00 - SUMMIT 230KV CKT 1'	319	319	0.10053	106.7759	'STEGALL - WAYSIDE 230KV CKT 1'
13G	03ALL	'FROM->TO'	'SMOKYHL6 230.00 - SUMMIT 230KV CKT 1'	319	319	0.11561	106.7759	'STEGALL - WAYSIDE 230KV CKT 1'
13G	03ALL	'FROM->TO'	'SMOKYHL6 230.00 - SUMMIT 230KV CKT 1'	319	319	0.11561	106.7759	'STEGALL - WAYSIDE 230KV CKT 1'
13G	03ALL	'FROM->TO'	'SMOKYHL6 230.00 - SUMMIT 230KV CKT 1'	319	319	0.62655	106.7759	'STEGALL - WAYSIDE 230KV CKT 1'
13G	03ALL	'FROM->TO'	'SMOKYHL6 230.00 - SUMMIT 230KV CKT 1'	319	319	0.10055	106.7759	'STEGALL - WAYSIDE 230KV CKT 1'
13G	03ALL	'FROM->TO'	'SMOKYHL6 230.00 - SUMMIT 230KV CKT 1'	319	319	0.12788	106.7759	'STEGALL - WAYSIDE 230KV CKT 1'
13G	03ALL	'FROM->TO'	'SMOKYHL6 230.00 - SUMMIT 230KV CKT 1'	319	319	0.10317	106.7759	'STEGALL - WAYSIDE 230KV CKT 1'
13G	03ALL	'FROM->TO'	'SMOKYHL6 230.00 - SUMMIT 230KV CKT 1'	319	319	0.18608	108.5	'STEGALL - STEGALL TY 345KV CKT 1'
13G	03ALL	'FROM->TO'	'SMOKYHL6 230.00 - SUMMIT 230KV CKT 1'	319	319	0.09041	108.5	'STEGALL - STEGALL TY 345KV CKT 1'
13G	03ALL	'FROM->TO'	'SMOKYHL6 230.00 - SUMMIT 230KV CKT 1'	319	319	0.10393	108.5	'STEGALL - STEGALL TY 345KV CKT 1'
13G	03ALL	'FROM->TO'	'SMOKYHL6 230.00 - SUMMIT 230KV CKT 1'	319	319	0.12296	108.5	'STEGALL - STEGALL TY 345KV CKT 1'
13G	03ALL	'FROM->TO'	'SMOKYHL6 230.00 - SUMMIT 230KV CKT 1'	319	319	0.12296	108.5	'STEGALL - STEGALL TY 345KV CKT 1'
13G	03ALL	'FROM->TO'	'SMOKYHL6 230.00 - SUMMIT 230KV CKT 1'	319	319	0.07858	108.5	'STEGALL - STEGALL TY 345KV CKT 1'
13G	03ALL	'FROM->TO'	'SMOKYHL6 230.00 - SUMMIT 230KV CKT 1'	319	319	0.10089	108.5	'STEGALL - STEGALL TY 345KV CKT 1'
13G	03ALL	'FROM->TO'	'SMOKYHL6 230.00 - SUMMIT 230KV CKT 1'	319	319	0.1159	108.5	'STEGALL - STEGALL TY 345KV CKT 1'
13G	03ALL	'FROM->TO'	'SMOKYHL6 230.00 - SUMMIT 230KV CKT 1'	319	319	0.1159	108.5	'STEGALL - STEGALL TY 345KV CKT 1'
13G	03ALL	'FROM->TO'	'SMOKYHL6 230.00 - SUMMIT 230KV CKT 1'	319	319	0.62666	108.5	'STEGALL - STEGALL TY 345KV CKT 1'
13G	03ALL	'FROM->TO'	'SMOKYHL6 230.00 - SUMMIT 230KV CKT 1'	319	319	0.10091	108.5	'STEGALL - STEGALL TY 345KV CKT 1'
13G	03ALL	'FROM->TO'	'SMOKYHL6 230.00 - SUMMIT 230KV CKT 1'	319	319	0.12815	108.5	'STEGALL - STEGALL TY 345KV CKT 1'
13G	03ALL	'FROM->TO'	'SMOKYHL6 230.00 - SUMMIT 230KV CKT 1'	319	319	0.1035	108.5	'STEGALL - STEGALL TY 345KV CKT 1'
13G	03ALL	'FROM->TO'	'SMOKYHL6 230.00 - SUMMIT 230KV CKT 1'	319	319	0.18827	109.164	'Hitchland Interchange (H TB80155502) 345/230/13.2KV TRANSFORMER CKT 1
13G	03ALL	'FROM->TO'	'SMOKYHL6 230.00 - SUMMIT 230KV CKT 1'	319	319	0.09271	109.164	'Hitchland Interchange (H TB80155502) 345/230/13.2KV TRANSFORMER CKT 1

SEASON	GROUP	DIRECTION	MONITORED ELEMENT	RATE A (MVA)	RATE B (MVA)	TDF	TC%LOADING (%MVA)	CONTINGENCY NAME
13G	03ALL	'FROM->TO'	'SMOKYHL6 230.00 - SUMMIT 230KV CKT 1'	319	319	0.10665	109.164	'Hitchland Interchange (H TB80155502) 345/230/13.2KV TRANSFORMER CKT 1
13G	03ALL	'FROM->TO'	'SMOKYHL6 230.00 - SUMMIT 230KV CKT 1'	319	319	0.12575	109.164	'Hitchland Interchange (H TB80155502) 345/230/13.2KV TRANSFORMER CKT 1
13G	03ALL	'FROM->TO'	'SMOKYHL6 230.00 - SUMMIT 230KV CKT 1'	319	319	0.12575	109.164	'Hitchland Interchange (H TB80155502) 345/230/13.2KV TRANSFORMER CKT 1
13G	03ALL	'FROM->TO'	'SMOKYHL6 230.00 - SUMMIT 230KV CKT 1'	319	319	0.08098	109.164	'Hitchland Interchange (H TB80155502) 345/230/13.2KV TRANSFORMER CKT 1
13G	03ALL	'FROM->TO'	'SMOKYHL6 230.00 - SUMMIT 230KV CKT 1'	319	319	0.10409	109.164	'Hitchland Interchange (H TB80155502) 345/230/13.2KV TRANSFORMER CKT 1
13G	03ALL	'FROM->TO'	'SMOKYHL6 230.00 - SUMMIT 230KV CKT 1'	319	319	0.11917	109.164	'Hitchland Interchange (H TB80155502) 345/230/13.2KV TRANSFORMER CKT 1
13G	03ALL	'FROM->TO'	'SMOKYHL6 230.00 - SUMMIT 230KV CKT 1'	319	319	0.11917	109.164	'Hitchland Interchange (H TB80155502) 345/230/13.2KV TRANSFORMER CKT 1
13G	03ALL	'FROM->TO'	'SMOKYHL6 230.00 - SUMMIT 230KV CKT 1'	319	319	0.62843	109.164	'Hitchland Interchange (H TB80155502) 345/230/13.2KV TRANSFORMER CKT 1
13G	03ALL	'FROM->TO'	'SMOKYHL6 230.00 - SUMMIT 230KV CKT 1'	319	319	0.10404	109.164	'Hitchland Interchange (H TB80155502) 345/230/13.2KV TRANSFORMER CKT 1
13G	03ALL	'FROM->TO'	'SMOKYHL6 230.00 - SUMMIT 230KV CKT 1'	319	319	0.13103	109.164	'Hitchland Interchange (H TB80155502) 345/230/13.2KV TRANSFORMER CKT 1
13G	03ALL	'FROM->TO'	'SMOKYHL6 230.00 - SUMMIT 230KV CKT 1'	319	319	0.10717	109.164	'Hitchland Interchange (H TB80155502) 345/230/13.2KV TRANSFORMER CKT 1
13G	03ALL	'FROM->TO'	TRANSFORMER CKT 1'	559	559	0.16551	105.137	'Hitchland Interchange (H TB80155502) 345/230/13.2KV TRANSFORMER CKT 1
13G	03ALL	'FROM->TO'	TRANSFORMER CKT 1'	559	559	0.1741	105.137	'Hitchland Interchange (H TB80155502) 345/230/13.2KV TRANSFORMER CKT 1
13G	03ALL	'FROM->TO'	TRANSFORMER CKT 1'	559	559	0.20209	105.137	'Hitchland Interchange (H TB80155502) 345/230/13.2KV TRANSFORMER CKT 1
13G	03ALL	'FROM->TO'	TRANSFORMER CKT 1'	559	559	0.20855	105.137	'Hitchland Interchange (H TB80155502) 345/230/13.2KV TRANSFORMER CKT 1
13G	03ALL	'FROM->TO'	TRANSFORMER CKT 1'	559	559	0.10533	105.137	'Hitchland Interchange (H TB80155502) 345/230/13.2KV TRANSFORMER CKT 1
13G	03ALL	'FROM->TO'	TRANSFORMER CKT 1'	559	559	0.20855	105.137	'Hitchland Interchange (H TB80155502) 345/230/13.2KV TRANSFORMER CKT 1
13G	03ALL	'FROM->TO'	TRANSFORMER CKT 1'	559	559	0.17552	105.137	'Hitchland Interchange (H TB80155502) 345/230/13.2KV TRANSFORMER CKT 1
13G	03ALL	'FROM->TO'	TRANSFORMER CKT 1'	559	559	0.2489	105.137	'Hitchland Interchange (H TB80155502) 345/230/13.2KV TRANSFORMER CKT 1
13G	03ALL	'FROM->TO'	TRANSFORMER CKT 1'	559	559	0.10105	105.137	'Hitchland Interchange (H TB80155502) 345/230/13.2KV TRANSFORMER CKT 1
13G	03ALL	'FROM->TO'	TRANSFORMER CKT 1'	559	559	0.05659	105.137	'Hitchland Interchange (H TB80155502) 345/230/13.2KV TRANSFORMER CKT 1
13G	03ALL	'FROM->TO'	TRANSFORMER CKT 1'	559	559	0.24351	105.137	'Hitchland Interchange (H TB80155502) 345/230/13.2KV TRANSFORMER CKT 1
13G	03ALL	'FROM->TO'	TRANSFORMER CKT 1'	559	559	0.24351	105.137	'Hitchland Interchange (H TB80155502) 345/230/13.2KV TRANSFORMER CKT 1
13G	03ALL	'FROM->TO'	TRANSFORMER CKT 1'	559	559	0.12328	105.137	'Hitchland Interchange (H TB80155502) 345/230/13.2KV TRANSFORMER CKT 1
13G	03ALL	'FROM->TO'	TRANSFORMER CKT 1'	559	559	0.11451	105.137	'Hitchland Interchange (H TB80155502) 345/230/13.2KV TRANSFORMER CKT 1
13G	03ALL	'FROM->TO'	TRANSFORMER CKT 1'	559	559	0.24612	105.137	'Hitchland Interchange (H TB80155502) 345/230/13.2KV TRANSFORMER CKT 1
13G	03ALL	'FROM->TO'	TRANSFORMER CKT 1'	559	559	0.21604	105.137	'Hitchland Interchange (H TB80155502) 345/230/13.2KV TRANSFORMER CKT 1
13G	03ALL	'FROM->TO'	TRANSFORMER CKT 1'	559	559	0.27189	105.137	'Hitchland Interchange (H TB80155502) 345/230/13.2KV TRANSFORMER CKT 1
13G	03ALL	'FROM->TO'	TRANSFORMER CKT 1'	559	559	0.16551	101.2543	'Hitchland Interchange (H TB80155502) 345/230/13.2KV TRANSFORMER CKT 1
13G	03ALL	'FROM->TO'	TRANSFORMER CKT 1'	559	559	0.1741	101.2543	'Hitchland Interchange (H TB80155502) 345/230/13.2KV TRANSFORMER CKT 1
13G	03ALL	'FROM->TO'	TRANSFORMER CKT 1'	559	559	0.20209	101.2543	'Hitchland Interchange (H TB80155502) 345/230/13.2KV TRANSFORMER CKT 1
13G	03ALL	'FROM->TO'	TRANSFORMER CKT 1'	559	559	0.20855	101.2543	'Hitchland Interchange (H TB80155502) 345/230/13.2KV TRANSFORMER CKT 1
13G	03ALL	'FROM->TO'	TRANSFORMER CKT 1'	559	559	0.10533	101.2543	'Hitchland Interchange (H TB80155502) 345/230/13.2KV TRANSFORMER CKT 1
13G	03ALL	'FROM->TO'	TRANSFORMER CKT 1'	559	559	0.20855	101.2543	'Hitchland Interchange (H TB80155502) 345/230/13.2KV TRANSFORMER CKT 1
13G	03ALL	'FROM->TO'	TRANSFORMER CKT 1'	559	559	0.17552	101.2543	'Hitchland Interchange (H TB80155502) 345/230/13.2KV TRANSFORMER CKT 1
13G	03ALL	'FROM->TO'	TRANSFORMER CKT 1'	559	559	0.2489	101.2543	'Hitchland Interchange (H TB80155502) 345/230/13.2KV TRANSFORMER CKT 1
13G	03ALL	'FROM->TO'	TRANSFORMER CKT 1'	559	559	0.10105	101.2543	'Hitchland Interchange (H TB80155502) 345/230/13.2KV TRANSFORMER CKT 1
13G	03ALL	'FROM->TO'	TRANSFORMER CKT 1'	559	559	0.05659	101.2543	'Hitchland Interchange (H TB80155502) 345/230/13.2KV TRANSFORMER CKT 1
13G	03ALL	'FROM->TO'	TRANSFORMER CKT 1'	559	559	0.24351	101.2543	'Hitchland Interchange (H TB80155502) 345/230/13.2KV TRANSFORMER CKT 1
13G	03ALL	'FROM->TO'	TRANSFORMER CKT 1'	559	559	0.24351	101.2543	'Hitchland Interchange (H TB80155502) 345/230/13.2KV TRANSFORMER CKT 1
13G	03ALL	'FROM->TO'	TRANSFORMER CKT 1'	559	559	0.12328	101.2543	'Hitchland Interchange (H TB80155502) 345/230/13.2KV TRANSFORMER CKT 1
13G	03ALL	'FROM->TO'	TRANSFORMER CKT 1'	559	559	0.11451	101.2543	'Hitchland Interchange (H TB80155502) 345/230/13.2KV TRANSFORMER CKT 1
13G	03ALL	'FROM->TO'	TRANSFORMER CKT 1'	559	559	0.24612	101.2543	'Hitchland Interchange (H TB80155502) 345/230/13.2KV TRANSFORMER CKT 1
13G	03ALL	'FROM->TO'	TRANSFORMER CKT 1'	559	559	0.21604	101.2543	'Hitchland Interchange (H TB80155502) 345/230/13.2KV TRANSFORMER CKT 1
13G	03ALL	'FROM->TO'	TRANSFORMER CKT 1'	559	559	0.27189	101.2543	'Hitchland Interchange (H TB80155502) 345/230/13.2KV TRANSFORMER CKT 1
13G	03ALL	'FROM->TO'	'SMOKYHL6 230.00 - SUMMIT 230KV CKT 1'	319	319	0.19016	111.203	'POTTER COUNTY INTERCHANGE (WAUK 90343-A) 345/230/13.2KV TRANSFORMER CKT 1
13G	03ALL	'FROM->TO'	'SMOKYHL6 230.00 - SUMMIT 230KV CKT 1'	319	319	0.0947	111.203	'POTTER COUNTY INTERCHANGE (WAUK 90343-A) 345/230/13.2KV TRANSFORMER CKT 1
13G	03ALL	'FROM->TO'	'SMOKYHL6 230.00 - SUMMIT 230KV CKT 1'	319	319	0.10896	111.203	'POTTER COUNTY INTERCHANGE (WAUK 90343-A) 345/230/13.2KV TRANSFORMER CKT 1
13G	03ALL	'FROM->TO'	'SMOKYHL6 230.00 - SUMMIT 230KV CKT 1'	319	319	0.12813	111.203	'POTTER COUNTY INTERCHANGE (WAUK 90343-A) 345/230/13.2KV TRANSFORMER CKT 1
13G	03ALL	'FROM->TO'	'SMOKYHL6 230.00 - SUMMIT 230KV CKT 1'	319	319	0.12813	111.203	'POTTER COUNTY INTERCHANGE (WAUK 90343-A) 345/230/13.2KV TRANSFORMER CKT 1
13G	03ALL	'FROM->TO'	'SMOKYHL6 230.00 - SUMMIT 230KV CKT 1'	319	319	0.08298	111.203	'POTTER COUNTY INTERCHANGE (WAUK 90343-A) 345/230/13.2KV TRANSFORMER CKT 1
13G	03ALL	'FROM->TO'	'SMOKYHL6 230.00 - SUMMIT 230KV CKT 1'	319	319	0.10693	111.203	'POTTER COUNTY INTERCHANGE (WAUK 90343-A) 345/230/13.2KV TRANSFORMER CKT 1
13G	03ALL	'FROM->TO'	'SMOKYHL6 230.00 - SUMMIT 230KV CKT 1'	319	319	0.12195	111.203	'POTTER COUNTY INTERCHANGE (WAUK 90343-A) 345/230/13.2KV TRANSFORMER CKT 1
13G	03ALL	'FROM->TO'	'SMOKYHL6 230.00 - SUMMIT 230KV CKT 1'	319	319	0.12195	111.203	'POTTER COUNTY INTERCHANGE (WAUK 90343-A) 345/230/13.2KV TRANSFORMER CKT 1
13G	03ALL	'FROM->TO'	'SMOKYHL6 230.00 - SUMMIT 230KV CKT 1'	319	319	0.62984	111.203	'POTTER COUNTY INTERCHANGE (WAUK 90343-A) 345/230/13.2KV TRANSFORMER CKT 1
13G	03ALL	'FROM->TO'	'SMOKYHL6 230.00 - SUMMIT 230KV CKT 1'	319	319	0.10685	111.203	'POTTER COUNTY INTERCHANGE (WAUK 90343-A) 345/230/13.2KV TRANSFORMER CKT 1
13G	03ALL	'FROM->TO'	'SMOKYHL6 230.00 - SUMMIT 230KV CKT 1'	319	319	0.1335	111.203	'POTTER COUNTY INTERCHANGE (WAUK 90343-A) 345/230/13.2KV TRANSFORMER CKT 1
13G	03ALL	'FROM->TO'	'SMOKYHL6 230.00 - SUMMIT 230KV CKT 1'	319	319	0.11027	111.203	'POTTER COUNTY INTERCHANGE (WAUK 90343-A) 345/230/13.2KV TRANSFORMER CKT 1
13G	03ALL	'TO->FROM'	'CLEARWATER - MILAN TAP 138KV CKT 1'	110	110	0.03736	128.6451	'POTTER COUNTY INTERCHANGE (WAUK 90343-A) 345/230/13.2KV TRANSFORMER CKT 1
13G	03ALL	'TO->FROM'	'CLEARWATER - MILAN TAP 138KV CKT 1'	110	110	0.06404	128.6451	'POTTER COUNTY INTERCHANGE (WAUK 90343-A) 345/230/13.2KV TRANSFORMER CKT 1
13G	03ALL	'TO->FROM'	'CLEARWATER - MILAN TAP 138KV CKT 1'	110	110	0.11067	128.6451	'POTTER COUNTY INTERCHANGE (WAUK 90343-A) 345/230/13.2KV TRANSFORMER CKT 1
13G	03ALL	'TO->FROM'	'CLEARWATER - MILAN TAP 138KV CKT 1'	110	110	0.05067	128.6451	'POTTER COUNTY INTERCHANGE (WAUK 90343-A) 345/230/13.2KV TRANSFORMER CKT 1
13G	03ALL	'TO->FROM'	'CLEARWATER - MILAN TAP 138KV CKT 1'	110	110	0.05067	128.6451	'POTTER COUNTY INTERCHANGE (WAUK 90343-A) 345/230/13.2KV TRANSFORMER CKT 1
13G	03ALL	'TO->FROM'	'CLEARWATER - MILAN TAP 138KV CKT 1'	110	110	0.21228	128.6451	'POTTER COUNTY INTERCHANGE (WAUK 90343-A) 345/230/13.2KV TRANSFORMER CKT 1

SEASON	GROUP	DIRECTION	MONITORED ELEMENT	RATE A (MVA)	RATE B (MVA)	TDF	TC%LOADING (%MVA)	CONTINGENCY NAME
13G	03ALL	'TO->FROM'	'CLEARWATER - MILAN TAP 138KV CKT 1'	110	110	0.04019	128.6451	'POTTER COUNTY INTERCHANGE (WAUK 90343-A) 345/230/13.2KV TRANSFORMER CKT 1
13G	03ALL	'TO->FROM'	'CLEARWATER - MILAN TAP 138KV CKT 1'	110	110	0.042	128.6451	'POTTER COUNTY INTERCHANGE (WAUK 90343-A) 345/230/13.2KV TRANSFORMER CKT 1
13G	03ALL	'TO->FROM'	'CLEARWATER - MILAN TAP 138KV CKT 1'	110	110	0.042	128.6451	'POTTER COUNTY INTERCHANGE (WAUK 90343-A) 345/230/13.2KV TRANSFORMER CKT 1
13G	03ALL	'TO->FROM'	'CLEARWATER - MILAN TAP 138KV CKT 1'	110	110	0.52848	128.6451	'POTTER COUNTY INTERCHANGE (WAUK 90343-A) 345/230/13.2KV TRANSFORMER CKT 1
13G	03ALL	'TO->FROM'	'CLEARWATER - MILAN TAP 138KV CKT 1'	110	110	0.03959	128.6451	'POTTER COUNTY INTERCHANGE (WAUK 90343-A) 345/230/13.2KV TRANSFORMER CKT 1
13G	03ALL	'TO->FROM'	'CLEARWATER - MILAN TAP 138KV CKT 1'	110	110	0.04496	128.6451	'POTTER COUNTY INTERCHANGE (WAUK 90343-A) 345/230/13.2KV TRANSFORMER CKT 1
13G	03ALL	'TO->FROM'	'CLEARWATER - MILAN TAP 138KV CKT 1'	110	110	0.03898	128.6451	'POTTER COUNTY INTERCHANGE (WAUK 90343-A) 345/230/13.2KV TRANSFORMER CKT 1
13G	03ALL	'FROM->TO'	'GREENSBURG - SUN CITY 115KV CKT 1'	120.7	129.5	0.17937	104.378	'POTTER COUNTY INTERCHANGE (WAUK 90343-A) 345/230/13.2KV TRANSFORMER CKT 1
13G	03ALL	'FROM->TO'	'GREENSBURG - SUN CITY 115KV CKT 1'	120.7	129.5	0.04662	104.378	'POTTER COUNTY INTERCHANGE (WAUK 90343-A) 345/230/13.2KV TRANSFORMER CKT 1
13G	03ALL	'FROM->TO'	'GREENSBURG - SUN CITY 115KV CKT 1'	120.7	129.5	0.04662	104.378	'POTTER COUNTY INTERCHANGE (WAUK 90343-A) 345/230/13.2KV TRANSFORMER CKT 1
13G	03ALL	'FROM->TO'	'GREENSBURG - SUN CITY 115KV CKT 1'	120.7	129.5	0.40064	104.378	'POTTER COUNTY INTERCHANGE (WAUK 90343-A) 345/230/13.2KV TRANSFORMER CKT 1
13G	03ALL	'FROM->TO'	'GREENSBURG - SUN CITY 115KV CKT 1'	120.7	129.5	0.03217	104.378	'POTTER COUNTY INTERCHANGE (WAUK 90343-A) 345/230/13.2KV TRANSFORMER CKT 1
13G	03ALL	'FROM->TO'	'GREENSBURG - SUN CITY 115KV CKT 1'	120.7	129.5	0.03633	104.378	'POTTER COUNTY INTERCHANGE (WAUK 90343-A) 345/230/13.2KV TRANSFORMER CKT 1
13G	03ALL	'FROM->TO'	'GREENSBURG - SUN CITY 115KV CKT 1'	120.7	129.5	0.03633	104.378	'POTTER COUNTY INTERCHANGE (WAUK 90343-A) 345/230/13.2KV TRANSFORMER CKT 1
13G	03ALL	'FROM->TO'	'GREENSBURG - SUN CITY 115KV CKT 1'	120.7	129.5	0.03221	104.378	'POTTER COUNTY INTERCHANGE (WAUK 90343-A) 345/230/13.2KV TRANSFORMER CKT 1
13G	03ALL	'FROM->TO'	'GREENSBURG - SUN CITY 115KV CKT 1'	120.7	129.5	0.03888	104.378	'POTTER COUNTY INTERCHANGE (WAUK 90343-A) 345/230/13.2KV TRANSFORMER CKT 1
13G	03ALL	'FROM->TO'	'GREENSBURG - SUN CITY 115KV CKT 1'	120.7	129.5	0.03373	104.378	'POTTER COUNTY INTERCHANGE (WAUK 90343-A) 345/230/13.2KV TRANSFORMER CKT 1
13G	03ALL	'TO->FROM'	'GREENSBURG - SSTARTP3 115.00 115KV CKT 1	120.7	129.5	0.17937	112.242	'POTTER COUNTY INTERCHANGE (WAUK 90343-A) 345/230/13.2KV TRANSFORMER CKT 1
13G	03ALL	'TO->FROM'	'GREENSBURG - SSTARTP3 115.00 115KV CKT 1	120.7	129.5	0.04662	112.242	'POTTER COUNTY INTERCHANGE (WAUK 90343-A) 345/230/13.2KV TRANSFORMER CKT 1
13G	03ALL	'TO->FROM'	'GREENSBURG - SSTARTP3 115.00 115KV CKT 1	120.7	129.5	0.04662	112.242	'POTTER COUNTY INTERCHANGE (WAUK 90343-A) 345/230/13.2KV TRANSFORMER CKT 1
13G	03ALL	'TO->FROM'	'GREENSBURG - SSTARTP3 115.00 115KV CKT 1	120.7	129.5	0.40064	112.242	'POTTER COUNTY INTERCHANGE (WAUK 90343-A) 345/230/13.2KV TRANSFORMER CKT 1
13G	03ALL	'TO->FROM'	'GREENSBURG - SSTARTP3 115.00 115KV CKT 1	120.7	129.5	0.03217	112.242	'POTTER COUNTY INTERCHANGE (WAUK 90343-A) 345/230/13.2KV TRANSFORMER CKT 1
13G	03ALL	'TO->FROM'	'GREENSBURG - SSTARTP3 115.00 115KV CKT 1	120.7	129.5	0.03633	112.242	'POTTER COUNTY INTERCHANGE (WAUK 90343-A) 345/230/13.2KV TRANSFORMER CKT 1
13G	03ALL	'TO->FROM'	'GREENSBURG - SSTARTP3 115.00 115KV CKT 1	120.7	129.5	0.03633	112.242	'POTTER COUNTY INTERCHANGE (WAUK 90343-A) 345/230/13.2KV TRANSFORMER CKT 1
13G	03ALL	'TO->FROM'	'GREENSBURG - SSTARTP3 115.00 115KV CKT 1	120.7	129.5	0.03221	112.242	'POTTER COUNTY INTERCHANGE (WAUK 90343-A) 345/230/13.2KV TRANSFORMER CKT 1
13G	03ALL	'TO->FROM'	'GREENSBURG - SSTARTP3 115.00 115KV CKT 1	120.7	129.5	0.03888	112.242	'POTTER COUNTY INTERCHANGE (WAUK 90343-A) 345/230/13.2KV TRANSFORMER CKT 1
13G	03ALL	'TO->FROM'	'GREENSBURG - SSTARTP3 115.00 115KV CKT 1	120.7	129.5	0.03373	112.242	'POTTER COUNTY INTERCHANGE (WAUK 90343-A) 345/230/13.2KV TRANSFORMER CKT 1
13G	03ALL	'FROM->TO'	'HARPER - MILAN TAP 138KV CKT 1'	95.6	95.6	0.03736	155.2882	'POTTER COUNTY INTERCHANGE (WAUK 90343-A) 345/230/13.2KV TRANSFORMER CKT 1
13G	03ALL	'FROM->TO'	'HARPER - MILAN TAP 138KV CKT 1'	95.6	95.6	0.06404	155.2882	'POTTER COUNTY INTERCHANGE (WAUK 90343-A) 345/230/13.2KV TRANSFORMER CKT 1
13G	03ALL	'FROM->TO'	'HARPER - MILAN TAP 138KV CKT 1'	95.6	95.6	0.11067	155.2882	'POTTER COUNTY INTERCHANGE (WAUK 90343-A) 345/230/13.2KV TRANSFORMER CKT 1
13G	03ALL	'FROM->TO'	'HARPER - MILAN TAP 138KV CKT 1'	95.6	95.6	0.05067	155.2882	'POTTER COUNTY INTERCHANGE (WAUK 90343-A) 345/230/13.2KV TRANSFORMER CKT 1
13G	03ALL	'FROM->TO'	'HARPER - MILAN TAP 138KV CKT 1'	95.6	95.6	0.05067	155.2882	'POTTER COUNTY INTERCHANGE (WAUK 90343-A) 345/230/13.2KV TRANSFORMER CKT 1
13G	03ALL	'FROM->TO'	'HARPER - MILAN TAP 138KV CKT 1'	95.6	95.6	0.21228	155.2882	'POTTER COUNTY INTERCHANGE (WAUK 90343-A) 345/230/13.2KV TRANSFORMER CKT 1
13G	03ALL	'FROM->TO'	'HARPER - MILAN TAP 138KV CKT 1'	95.6	95.6	0.04019	155.2882	'POTTER COUNTY INTERCHANGE (WAUK 90343-A) 345/230/13.2KV TRANSFORMER CKT 1
13G	03ALL	'FROM->TO'	'HARPER - MILAN TAP 138KV CKT 1'	95.6	95.6	0.042	155.2882	'POTTER COUNTY INTERCHANGE (WAUK 90343-A) 345/230/13.2KV TRANSFORMER CKT 1
13G	03ALL	'FROM->TO'	'HARPER - MILAN TAP 138KV CKT 1'	95.6	95.6	0.042	155.2882	'POTTER COUNTY INTERCHANGE (WAUK 90343-A) 345/230/13.2KV TRANSFORMER CKT 1
13G	03ALL	'FROM->TO'	'HARPER - MILAN TAP 138KV CKT 1'	95.6	95.6	0.52848	155.2882	'POTTER COUNTY INTERCHANGE (WAUK 90343-A) 345/230/13.2KV TRANSFORMER CKT 1
13G	03ALL	'FROM->TO'	'HARPER - MILAN TAP 138KV CKT 1'	95.6	95.6	0.03959	155.2882	'POTTER COUNTY INTERCHANGE (WAUK 90343-A) 345/230/13.2KV TRANSFORMER CKT 1
13G	03ALL	'FROM->TO'	'HARPER - MILAN TAP 138KV CKT 1'	95.6	95.6	0.04496	155.2882	'POTTER COUNTY INTERCHANGE (WAUK 90343-A) 345/230/13.2KV TRANSFORMER CKT 1
13G	03ALL	'FROM->TO'	'HARPER - MILAN TAP 138KV CKT 1'	95.6	95.6	0.03898	155.2882	'POTTER COUNTY INTERCHANGE (WAUK 90343-A) 345/230/13.2KV TRANSFORMER CKT 1
13G	03ALL	'TO->FROM'	'MEDICINE LODGE - SUN CITY 115KV CKT 1'	120.7	129.5	0.17937	101.7949	'POTTER COUNTY INTERCHANGE (WAUK 90343-A) 345/230/13.2KV TRANSFORMER CKT 1
13G	03ALL	'TO->FROM'	'MEDICINE LODGE - SUN CITY 115KV CKT 1'	120.7	129.5	0.04662	101.7949	'POTTER COUNTY INTERCHANGE (WAUK 90343-A) 345/230/13.2KV TRANSFORMER CKT 1
13G	03ALL	'TO->FROM'	'MEDICINE LODGE - SUN CITY 115KV CKT 1'	120.7	129.5	0.04662	101.7949	'POTTER COUNTY INTERCHANGE (WAUK 90343-A) 345/230/13.2KV TRANSFORMER CKT 1
13G	03ALL	'TO->FROM'	'MEDICINE LODGE - SUN CITY 115KV CKT 1'	120.7	129.5	0.40064	101.7949	'POTTER COUNTY INTERCHANGE (WAUK 90343-A) 345/230/13.2KV TRANSFORMER CKT 1
13G	03ALL	'TO->FROM'	'MEDICINE LODGE - SUN CITY 115KV CKT 1'	120.7	129.5	0.03217	101.7949	'POTTER COUNTY INTERCHANGE (WAUK 90343-A) 345/230/13.2KV TRANSFORMER CKT 1
13G	03ALL	'TO->FROM'	'MEDICINE LODGE - SUN CITY 115KV CKT 1'	120.7	129.5	0.03633	101.7949	'POTTER COUNTY INTERCHANGE (WAUK 90343-A) 345/230/13.2KV TRANSFORMER CKT 1
13G	03ALL	'TO->FROM'	'MEDICINE LODGE - SUN CITY 115KV CKT 1'	120.7	129.5	0.03633	101.7949	'POTTER COUNTY INTERCHANGE (WAUK 90343-A) 345/230/13.2KV TRANSFORMER CKT 1
13G	03ALL	'TO->FROM'	'MEDICINE LODGE - SUN CITY 115KV CKT 1'	120.7	129.5	0.03221	101.7949	'POTTER COUNTY INTERCHANGE (WAUK 90343-A) 345/230/13.2KV TRANSFORMER CKT 1
13G	03ALL	'TO->FROM'	'MEDICINE LODGE - SUN CITY 115KV CKT 1'	120.7	129.5	0.03888	101.7949	'POTTER COUNTY INTERCHANGE (WAUK 90343-A) 345/230/13.2KV TRANSFORMER CKT 1
13G	03ALL	'TO->FROM'	'MEDICINE LODGE - SUN CITY 115KV CKT 1'	120.7	129.5	0.03373	101.7949	'POTTER COUNTY INTERCHANGE (WAUK 90343-A) 345/230/13.2KV TRANSFORMER CKT 1
13G	03ALL	'TO->FROM'	'BARBER 3 115.00 - MEDICINE LODGE 115KV CKT 1'	79.7	79.7	0.11753	101.6136	'POTTER COUNTY INTERCHANGE (WAUK 90343-A) 345/230/13.2KV TRANSFORMER CKT 1
13G	03ALL	'TO->FROM'	'BARBER 3 115.00 - MEDICINE LODGE 115KV CKT 1'	79.7	79.7	0.0364	101.6136	'POTTER COUNTY INTERCHANGE (WAUK 90343-A) 345/230/13.2KV TRANSFORMER CKT 1
13G	03ALL	'TO->FROM'	'BARBER 3 115.00 - MEDICINE LODGE 115KV CKT 1'	79.7	79.7	0.0364	101.6136	'POTTER COUNTY INTERCHANGE (WAUK 90343-A) 345/230/13.2KV TRANSFORMER CKT 1
13G	03ALL	'TO->FROM'	'BARBER 3 115.00 - MEDICINE LODGE 115KV CKT 1'	79.7	79.7	0.25319	101.6136	'POTTER COUNTY INTERCHANGE (WAUK 90343-A) 345/230/13.2KV TRANSFORMER CKT 1
13G	03ALL	'TO->FROM'	'BARBER 3 115.00 - MEDICINE LODGE 115KV CKT 1'	79.7	79.7	0.03107	101.6136	'POTTER COUNTY INTERCHANGE (WAUK 90343-A) 345/230/13.2KV TRANSFORMER CKT 1
13G	03ALL	'FROM->TO'	'Hitchland Interchange (H TB80155502) 345/230/13.2KV TRANSFORMER CKT 1	560	560	0.15363	101.8338	'POTTER COUNTY INTERCHANGE (WAUK 90343-A) 345/230/13.2KV TRANSFORMER CKT 1
13G	03ALL	'FROM->TO'	'Hitchland Interchange (H TB80155502) 345/230/13.2KV TRANSFORMER CKT 1	560	560	0.1616	101.8338	'POTTER COUNTY INTERCHANGE (WAUK 90343-A) 345/230/13.2KV TRANSFORMER CKT 1
13G	03ALL	'FROM->TO'	'Hitchland Interchange (H TB80155502) 345/230/13.2KV TRANSFORMER CKT 1	560	560	0.18758	101.8338	'POTTER COUNTY INTERCHANGE (WAUK 90343-A) 345/230/13.2KV TRANSFORMER CKT 1
13G	03ALL	'FROM->TO'	'Hitchland Interchange (H TB80155502) 345/230/13.2KV TRANSFORMER CKT 1	560	560	0.19358	101.8338	'POTTER COUNTY INTERCHANGE (WAUK 90343-A) 345/230/13.2KV TRANSFORMER CKT 1
13G	03ALL	'FROM->TO'	'Hitchland Interchange (H TB80155502) 345/230/13.2KV TRANSFORMER CKT 1	560	560	0.09776	101.8338	'POTTER COUNTY INTERCHANGE (WAUK 90343-A) 345/230/13.2KV TRANSFORMER CKT 1
13G	03ALL	'FROM->TO'	'Hitchland Interchange (H TB80155502) 345/230/13.2KV TRANSFORMER CKT 1	560	560	0.19358	101.8338	'POTTER COUNTY INTERCHANGE (WAUK 90343-A) 345/230/13.2KV TRANSFORMER CKT 1
13G	03ALL	'FROM->TO'	'Hitchland Interchange (H TB80155502) 345/230/13.2KV TRANSFORMER CKT 1	560	560	0.16292	101.8338	'POTTER COUNTY INTERCHANGE (WAUK 90343-A) 345/230/13.2KV TRANSFORMER CKT 1
13G	03ALL	'FROM->TO'	'Hitchland Interchange (H TB80155502) 345/230/13.2KV TRANSFORMER CKT 1	560	560	0.23103	101.8338	'POTTER COUNTY INTERCHANGE (WAUK 90343-A) 345/230/13.2KV TRANSFORMER CKT 1
13G	03ALL	'FROM->TO'	'Hitchland Interchange (H TB80155502) 345/230/13.2KV TRANSFORMER CKT 1	560	560	0.09379	101.8338	'POTTER COUNTY INTERCHANGE (WAUK 90343-A) 345/230/13.2KV TRANSFORMER CKT 1

SEASON	GROUP	DIRECTION	MONITORED ELEMENT	RATE A (MVA)	RATE B (MVA)	TDF	TC%LOADING (%MVA)	CONTINGENCY NAME
13G	03ALL	'FROM->TO'	'Hitchland Interchange (H TB80155502) 345/230/13.2KV TRANSFORMER CKT 1	560	560	0.05252	101.8338	'POTTER COUNTY INTERCHANGE (WAUK 90343-A) 345/230/13.2KV TRANSFORMER CKT 1
13G	03ALL	'FROM->TO'	'Hitchland Interchange (H TB80155502) 345/230/13.2KV TRANSFORMER CKT 1	560	560	0.22603	101.8338	'POTTER COUNTY INTERCHANGE (WAUK 90343-A) 345/230/13.2KV TRANSFORMER CKT 1
13G	03ALL	'FROM->TO'	'Hitchland Interchange (H TB80155502) 345/230/13.2KV TRANSFORMER CKT 1	560	560	0.22603	101.8338	'POTTER COUNTY INTERCHANGE (WAUK 90343-A) 345/230/13.2KV TRANSFORMER CKT 1
13G	03ALL	'FROM->TO'	'Hitchland Interchange (H TB80155502) 345/230/13.2KV TRANSFORMER CKT 1	560	560	0.11442	101.8338	'POTTER COUNTY INTERCHANGE (WAUK 90343-A) 345/230/13.2KV TRANSFORMER CKT 1
13G	03ALL	'FROM->TO'	'Hitchland Interchange (H TB80155502) 345/230/13.2KV TRANSFORMER CKT 1	560	560	0.10629	101.8338	'POTTER COUNTY INTERCHANGE (WAUK 90343-A) 345/230/13.2KV TRANSFORMER CKT 1
13G	03ALL	'FROM->TO'	'Hitchland Interchange (H TB80155502) 345/230/13.2KV TRANSFORMER CKT 1	560	560	0.22845	101.8338	'POTTER COUNTY INTERCHANGE (WAUK 90343-A) 345/230/13.2KV TRANSFORMER CKT 1
13G	03ALL	'FROM->TO'	'Hitchland Interchange (H TB80155502) 345/230/13.2KV TRANSFORMER CKT 1	560	560	0.20053	101.8338	'POTTER COUNTY INTERCHANGE (WAUK 90343-A) 345/230/13.2KV TRANSFORMER CKT 1
13G	03ALL	'FROM->TO'	'Hitchland Interchange (H TB80155502) 345/230/13.2KV TRANSFORMER CKT 1	560	560	0.25237	101.8338	'POTTER COUNTY INTERCHANGE (WAUK 90343-A) 345/230/13.2KV TRANSFORMER CKT 1
13G	03ALL	'FROM->TO'	'Hitchland Interchange (H TB80155502) 345/230/13.2KV TRANSFORMER CKT 1	560	560	0.15363	101.8073	'POTTER COUNTY INTERCHANGE (WAUK 90343-A) 345/230/13.2KV TRANSFORMER CKT 1
13G	03ALL	'FROM->TO'	'Hitchland Interchange (H TB80155502) 345/230/13.2KV TRANSFORMER CKT 1	560	560	0.1616	101.8073	'POTTER COUNTY INTERCHANGE (WAUK 90343-A) 345/230/13.2KV TRANSFORMER CKT 1
13G	03ALL	'FROM->TO'	'Hitchland Interchange (H TB80155502) 345/230/13.2KV TRANSFORMER CKT 1	560	560	0.18758	101.8073	'POTTER COUNTY INTERCHANGE (WAUK 90343-A) 345/230/13.2KV TRANSFORMER CKT 1
13G	03ALL	'FROM->TO'	'Hitchland Interchange (H TB80155502) 345/230/13.2KV TRANSFORMER CKT 1	560	560	0.19358	101.8073	'POTTER COUNTY INTERCHANGE (WAUK 90343-A) 345/230/13.2KV TRANSFORMER CKT 1
13G	03ALL	'FROM->TO'	'Hitchland Interchange (H TB80155502) 345/230/13.2KV TRANSFORMER CKT 1	560	560	0.09776	101.8073	'POTTER COUNTY INTERCHANGE (WAUK 90343-A) 345/230/13.2KV TRANSFORMER CKT 1
13G	03ALL	'FROM->TO'	'Hitchland Interchange (H TB80155502) 345/230/13.2KV TRANSFORMER CKT 1	560	560	0.19358	101.8073	'POTTER COUNTY INTERCHANGE (WAUK 90343-A) 345/230/13.2KV TRANSFORMER CKT 1
13G	03ALL	'FROM->TO'	'Hitchland Interchange (H TB80155502) 345/230/13.2KV TRANSFORMER CKT 1	560	560	0.16292	101.8073	'POTTER COUNTY INTERCHANGE (WAUK 90343-A) 345/230/13.2KV TRANSFORMER CKT 1
13G	03ALL	'FROM->TO'	'Hitchland Interchange (H TB80155502) 345/230/13.2KV TRANSFORMER CKT 1	560	560	0.23103	101.8073	'POTTER COUNTY INTERCHANGE (WAUK 90343-A) 345/230/13.2KV TRANSFORMER CKT 1
13G	03ALL	'FROM->TO'	'Hitchland Interchange (H TB80155502) 345/230/13.2KV TRANSFORMER CKT 1	560	560	0.09379	101.8073	'POTTER COUNTY INTERCHANGE (WAUK 90343-A) 345/230/13.2KV TRANSFORMER CKT 1
13G	03ALL	'FROM->TO'	'Hitchland Interchange (H TB80155502) 345/230/13.2KV TRANSFORMER CKT 1	560	560	0.05252	101.8073	'POTTER COUNTY INTERCHANGE (WAUK 90343-A) 345/230/13.2KV TRANSFORMER CKT 1
13G	03ALL	'FROM->TO'	'Hitchland Interchange (H TB80155502) 345/230/13.2KV TRANSFORMER CKT 1	560	560	0.22603	101.8073	'POTTER COUNTY INTERCHANGE (WAUK 90343-A) 345/230/13.2KV TRANSFORMER CKT 1
13G	03ALL	'FROM->TO'	'Hitchland Interchange (H TB80155502) 345/230/13.2KV TRANSFORMER CKT 1	560	560	0.22603	101.8073	'POTTER COUNTY INTERCHANGE (WAUK 90343-A) 345/230/13.2KV TRANSFORMER CKT 1
13G	03ALL	'FROM->TO'	'Hitchland Interchange (H TB80155502) 345/230/13.2KV TRANSFORMER CKT 1	560	560	0.11442	101.8073	'POTTER COUNTY INTERCHANGE (WAUK 90343-A) 345/230/13.2KV TRANSFORMER CKT 1
13G	03ALL	'FROM->TO'	'Hitchland Interchange (H TB80155502) 345/230/13.2KV TRANSFORMER CKT 1	560	560	0.10629	101.8073	'POTTER COUNTY INTERCHANGE (WAUK 90343-A) 345/230/13.2KV TRANSFORMER CKT 1
13G	03ALL	'FROM->TO'	'Hitchland Interchange (H TB80155502) 345/230/13.2KV TRANSFORMER CKT 1	560	560	0.22845	101.8073	'POTTER COUNTY INTERCHANGE (WAUK 90343-A) 345/230/13.2KV TRANSFORMER CKT 1
13G	03ALL	'FROM->TO'	'Hitchland Interchange (H TB80155502) 345/230/13.2KV TRANSFORMER CKT 1	560	560	0.20053	101.8073	'POTTER COUNTY INTERCHANGE (WAUK 90343-A) 345/230/13.2KV TRANSFORMER CKT 1
13G	03ALL	'FROM->TO'	'Hitchland Interchange (H TB80155502) 345/230/13.2KV TRANSFORMER CKT 1	560	560	0.25237	101.8073	'POTTER COUNTY INTERCHANGE (WAUK 90343-A) 345/230/13.2KV TRANSFORMER CKT 1
13G	03ALL	'FROM->TO'	'SMOKYHL6 230.00 - SUMMIT 230KV CKT 1'	319	319	0.18454	106.7274	'KNOLL 230 (KNOLL T1) 230/115/11.49KV TRANSFORMER CKT 1
13G	03ALL	'FROM->TO'	'SMOKYHL6 230.00 - SUMMIT 230KV CKT 1'	319	319	0.08861	106.7274	'KNOLL 230 (KNOLL T1) 230/115/11.49KV TRANSFORMER CKT 1
13G	03ALL	'FROM->TO'	'SMOKYHL6 230.00 - SUMMIT 230KV CKT 1'	319	319	0.10364	106.7274	'KNOLL 230 (KNOLL T1) 230/115/11.49KV TRANSFORMER CKT 1
13G	03ALL	'FROM->TO'	'SMOKYHL6 230.00 - SUMMIT 230KV CKT 1'	319	319	0.12298	106.7274	'KNOLL 230 (KNOLL T1) 230/115/11.49KV TRANSFORMER CKT 1
13G	03ALL	'FROM->TO'	'SMOKYHL6 230.00 - SUMMIT 230KV CKT 1'	319	319	0.12298	106.7274	'KNOLL 230 (KNOLL T1) 230/115/11.49KV TRANSFORMER CKT 1
13G	03ALL	'FROM->TO'	'SMOKYHL6 230.00 - SUMMIT 230KV CKT 1'	319	319	0.07821	106.7274	'KNOLL 230 (KNOLL T1) 230/115/11.49KV TRANSFORMER CKT 1
13G	03ALL	'FROM->TO'	'SMOKYHL6 230.00 - SUMMIT 230KV CKT 1'	319	319	0.09906	106.7274	'KNOLL 230 (KNOLL T1) 230/115/11.49KV TRANSFORMER CKT 1
13G	03ALL	'FROM->TO'	'SMOKYHL6 230.00 - SUMMIT 230KV CKT 1'	319	319	0.11546	106.7274	'KNOLL 230 (KNOLL T1) 230/115/11.49KV TRANSFORMER CKT 1
13G	03ALL	'FROM->TO'	'SMOKYHL6 230.00 - SUMMIT 230KV CKT 1'	319	319	0.11546	106.7274	'KNOLL 230 (KNOLL T1) 230/115/11.49KV TRANSFORMER CKT 1
13G	03ALL	'FROM->TO'	'SMOKYHL6 230.00 - SUMMIT 230KV CKT 1'	319	319	0.6284	106.7274	'KNOLL 230 (KNOLL T1) 230/115/11.49KV TRANSFORMER CKT 1
13G	03ALL	'FROM->TO'	'SMOKYHL6 230.00 - SUMMIT 230KV CKT 1'	319	319	0.09873	106.7274	'KNOLL 230 (KNOLL T1) 230/115/11.49KV TRANSFORMER CKT 1
13G	03ALL	'FROM->TO'	'SMOKYHL6 230.00 - SUMMIT 230KV CKT 1'	319	319	0.12837	106.7274	'KNOLL 230 (KNOLL T1) 230/115/11.49KV TRANSFORMER CKT 1
13G	03ALL	'FROM->TO'	'SMOKYHL6 230.00 - SUMMIT 230KV CKT 1'	319	319	0.10239	106.7274	'KNOLL 230 (KNOLL T1) 230/115/11.49KV TRANSFORMER CKT 1
13G	03ALL	'FROM->TO'	'GREENSBURG - SUN CITY 115KV CKT 1'	120.7	129.5	0.1802	102.1058	'POST ROCK (POSTROCK T1) 345/230/13.8KV TRANSFORMER CKT 1
13G	03ALL	'FROM->TO'	'GREENSBURG - SUN CITY 115KV CKT 1'	120.7	129.5	0.04842	102.1058	'POST ROCK (POSTROCK T1) 345/230/13.8KV TRANSFORMER CKT 1
13G	03ALL	'FROM->TO'	'GREENSBURG - SUN CITY 115KV CKT 1'	120.7	129.5	0.04842	102.1058	'POST ROCK (POSTROCK T1) 345/230/13.8KV TRANSFORMER CKT 1
13G	03ALL	'FROM->TO'	'GREENSBURG - SUN CITY 115KV CKT 1'	120.7	129.5	0.40019	102.1058	'POST ROCK (POSTROCK T1) 345/230/13.8KV TRANSFORMER CKT 1
13G	03ALL	'FROM->TO'	'GREENSBURG - SUN CITY 115KV CKT 1'	120.7	129.5	0.03253	102.1058	'POST ROCK (POSTROCK T1) 345/230/13.8KV TRANSFORMER CKT 1
13G	03ALL	'FROM->TO'	'GREENSBURG - SUN CITY 115KV CKT 1'	120.7	129.5	0.03842	102.1058	'POST ROCK (POSTROCK T1) 345/230/13.8KV TRANSFORMER CKT 1
13G	03ALL	'FROM->TO'	'GREENSBURG - SUN CITY 115KV CKT 1'	120.7	129.5	0.03842	102.1058	'POST ROCK (POSTROCK T1) 345/230/13.8KV TRANSFORMER CKT 1
13G	03ALL	'FROM->TO'	'GREENSBURG - SUN CITY 115KV CKT 1'	120.7	129.5	0.03251	102.1058	'POST ROCK (POSTROCK T1) 345/230/13.8KV TRANSFORMER CKT 1
13G	03ALL	'FROM->TO'	'GREENSBURG - SUN CITY 115KV CKT 1'	120.7	129.5	0.04205	102.1058	'POST ROCK (POSTROCK T1) 345/230/13.8KV TRANSFORMER CKT 1
13G	03ALL	'FROM->TO'	'GREENSBURG - SUN CITY 115KV CKT 1'	120.7	129.5	0.03473	102.1058	'POST ROCK (POSTROCK T1) 345/230/13.8KV TRANSFORMER CKT 1
13G	03ALL	'TO->FROM'	'GREENSBURG - SSTARTP3 115.00 115KV CKT 1	120.7	129.5	0.1802	110.0071	'POST ROCK (POSTROCK T1) 345/230/13.8KV TRANSFORMER CKT 1
13G	03ALL	'TO->FROM'	'GREENSBURG - SSTARTP3 115.00 115KV CKT 1	120.7	129.5	0.04842	110.0071	'POST ROCK (POSTROCK T1) 345/230/13.8KV TRANSFORMER CKT 1
13G	03ALL	'TO->FROM'	'GREENSBURG - SSTARTP3 115.00 115KV CKT 1	120.7	129.5	0.04842	110.0071	'POST ROCK (POSTROCK T1) 345/230/13.8KV TRANSFORMER CKT 1
13G	03ALL	'TO->FROM'	'GREENSBURG - SSTARTP3 115.00 115KV CKT 1	120.7	129.5	0.40019	110.0071	'POST ROCK (POSTROCK T1) 345/230/13.8KV TRANSFORMER CKT 1
13G	03ALL	'TO->FROM'	'GREENSBURG - SSTARTP3 115.00 115KV CKT 1	120.7	129.5	0.03253	110.0071	'POST ROCK (POSTROCK T1) 345/230/13.8KV TRANSFORMER CKT 1
13G	03ALL	'TO->FROM'	'GREENSBURG - SSTARTP3 115.00 115KV CKT 1	120.7	129.5	0.03842	110.0071	'POST ROCK (POSTROCK T1) 345/230/13.8KV TRANSFORMER CKT 1
13G	03ALL	'TO->FROM'	'GREENSBURG - SSTARTP3 115.00 115KV CKT 1	120.7	129.5	0.03842	110.0071	'POST ROCK (POSTROCK T1) 345/230/13.8KV TRANSFORMER CKT 1
13G	03ALL	'TO->FROM'	'GREENSBURG - SSTARTP3 115.00 115KV CKT 1	120.7	129.5	0.03251	110.0071	'POST ROCK (POSTROCK T1) 345/230/13.8KV TRANSFORMER CKT 1
13G	03ALL	'TO->FROM'	'GREENSBURG - SSTARTP3 115.00 115KV CKT 1	120.7	129.5	0.04205	110.0071	'POST ROCK (POSTROCK T1) 345/230/13.8KV TRANSFORMER CKT 1
13G	03ALL	'TO->FROM'	'GREENSBURG - SSTARTP3 115.00 115KV CKT 1	120.7	129.5	0.03473	110.0071	'POST ROCK (POSTROCK T1) 345/230/13.8KV TRANSFORMER CKT 1
13G	03ALL	'FROM->TO'	'G12_002T 115.00 - SCOTT CITY 115KV CKT 1	165	198	0.08194	112.5433	'HOLCOMB (HOLCOMB) 345/115/13.8KV TRANSFORMER CKT 1
13G	03ALL	'FROM->TO'	'G12_002T 115.00 - SCOTT CITY 115KV CKT 1	165	198	0.05939	112.5433	'HOLCOMB (HOLCOMB) 345/115/13.8KV TRANSFORMER CKT 1
13G	03ALL	'FROM->TO'	'G12_002T 115.00 - SCOTT CITY 115KV CKT 1	165	198	0.85483	112.5433	'HOLCOMB (HOLCOMB) 345/115/13.8KV TRANSFORMER CKT 1
13G	03ALL	'TO->FROM'	'CLEARWATER - MILAN TAP 138KV CKT 1'	110	110	0.03555	126.5797	'HOLCOMB (HOLCOMB) 345/115/13.8KV TRANSFORMER CKT 1
13G	03ALL	'TO->FROM'	'CLEARWATER - MILAN TAP 138KV CKT 1'	110	110	0.06287	126.5797	'HOLCOMB (HOLCOMB) 345/115/13.8KV TRANSFORMER CKT 1
13G	03ALL	'TO->FROM'	'CLEARWATER - MILAN TAP 138KV CKT 1'	110	110	0.11067	126.5797	'HOLCOMB (HOLCOMB) 345/115/13.8KV TRANSFORMER CKT 1

SEASON	GROUP	DIRECTION	MONITORED ELEMENT	RATE A (MVA)	RATE B (MVA)	TDF	TC%LOADING (%MVA)	CONTINGENCY NAME
13G	03ALL	'TO->FROM'	'CLEARWATER - MILAN TAP 138KV CKT 1'	110	110	0.04834	126.5797	'HOLCOMB (HOLCOMB) 345/115/13.8KV TRANSFORMER CKT 1
13G	03ALL	'TO->FROM'	'CLEARWATER - MILAN TAP 138KV CKT 1'	110	110	0.04834	126.5797	'HOLCOMB (HOLCOMB) 345/115/13.8KV TRANSFORMER CKT 1
13G	03ALL	'TO->FROM'	'CLEARWATER - MILAN TAP 138KV CKT 1'	110	110	0.21201	126.5797	'HOLCOMB (HOLCOMB) 345/115/13.8KV TRANSFORMER CKT 1
13G	03ALL	'TO->FROM'	'CLEARWATER - MILAN TAP 138KV CKT 1'	110	110	0.04292	126.5797	'HOLCOMB (HOLCOMB) 345/115/13.8KV TRANSFORMER CKT 1
13G	03ALL	'TO->FROM'	'CLEARWATER - MILAN TAP 138KV CKT 1'	110	110	0.03862	126.5797	'HOLCOMB (HOLCOMB) 345/115/13.8KV TRANSFORMER CKT 1
13G	03ALL	'TO->FROM'	'CLEARWATER - MILAN TAP 138KV CKT 1'	110	110	0.03862	126.5797	'HOLCOMB (HOLCOMB) 345/115/13.8KV TRANSFORMER CKT 1
13G	03ALL	'TO->FROM'	'CLEARWATER - MILAN TAP 138KV CKT 1'	110	110	0.52772	126.5797	'HOLCOMB (HOLCOMB) 345/115/13.8KV TRANSFORMER CKT 1
13G	03ALL	'TO->FROM'	'CLEARWATER - MILAN TAP 138KV CKT 1'	110	110	0.04051	126.5797	'HOLCOMB (HOLCOMB) 345/115/13.8KV TRANSFORMER CKT 1
13G	03ALL	'TO->FROM'	'CLEARWATER - MILAN TAP 138KV CKT 1'	110	110	0.0423	126.5797	'HOLCOMB (HOLCOMB) 345/115/13.8KV TRANSFORMER CKT 1
13G	03ALL	'TO->FROM'	'CLEARWATER - MILAN TAP 138KV CKT 1'	110	110	0.03489	126.5797	'HOLCOMB (HOLCOMB) 345/115/13.8KV TRANSFORMER CKT 1
13G	03ALL	'FROM->TO'	'GREENSBURG - SUN CITY 115KV CKT 1'	120.7	129.5	0.18139	106.7701	'HOLCOMB (HOLCOMB) 345/115/13.8KV TRANSFORMER CKT 1
13G	03ALL	'FROM->TO'	'GREENSBURG - SUN CITY 115KV CKT 1'	120.7	129.5	0.04454	106.7701	'HOLCOMB (HOLCOMB) 345/115/13.8KV TRANSFORMER CKT 1
13G	03ALL	'FROM->TO'	'GREENSBURG - SUN CITY 115KV CKT 1'	120.7	129.5	0.04454	106.7701	'HOLCOMB (HOLCOMB) 345/115/13.8KV TRANSFORMER CKT 1
13G	03ALL	'FROM->TO'	'GREENSBURG - SUN CITY 115KV CKT 1'	120.7	129.5	0.40193	106.7701	'HOLCOMB (HOLCOMB) 345/115/13.8KV TRANSFORMER CKT 1
13G	03ALL	'FROM->TO'	'GREENSBURG - SUN CITY 115KV CKT 1'	120.7	129.5	0.03956	106.7701	'HOLCOMB (HOLCOMB) 345/115/13.8KV TRANSFORMER CKT 1
13G	03ALL	'FROM->TO'	'GREENSBURG - SUN CITY 115KV CKT 1'	120.7	129.5	0.03272	106.7701	'HOLCOMB (HOLCOMB) 345/115/13.8KV TRANSFORMER CKT 1
13G	03ALL	'FROM->TO'	'GREENSBURG - SUN CITY 115KV CKT 1'	120.7	129.5	0.03272	106.7701	'HOLCOMB (HOLCOMB) 345/115/13.8KV TRANSFORMER CKT 1
13G	03ALL	'FROM->TO'	'GREENSBURG - SUN CITY 115KV CKT 1'	120.7	129.5	0.03632	106.7701	'HOLCOMB (HOLCOMB) 345/115/13.8KV TRANSFORMER CKT 1
13G	03ALL	'FROM->TO'	'GREENSBURG - SUN CITY 115KV CKT 1'	120.7	129.5	0.03627	106.7701	'HOLCOMB (HOLCOMB) 345/115/13.8KV TRANSFORMER CKT 1
13G	03ALL	'TO->FROM'	'GREENSBURG - SSTARTP3 115.00 115KV CKT 1	120.7	129.5	0.18139	114.6546	'HOLCOMB (HOLCOMB) 345/115/13.8KV TRANSFORMER CKT 1
13G	03ALL	'TO->FROM'	'GREENSBURG - SSTARTP3 115.00 115KV CKT 1	120.7	129.5	0.04454	114.6546	'HOLCOMB (HOLCOMB) 345/115/13.8KV TRANSFORMER CKT 1
13G	03ALL	'TO->FROM'	'GREENSBURG - SSTARTP3 115.00 115KV CKT 1	120.7	129.5	0.04454	114.6546	'HOLCOMB (HOLCOMB) 345/115/13.8KV TRANSFORMER CKT 1
13G	03ALL	'TO->FROM'	'GREENSBURG - SSTARTP3 115.00 115KV CKT 1	120.7	129.5	0.40193	114.6546	'HOLCOMB (HOLCOMB) 345/115/13.8KV TRANSFORMER CKT 1
13G	03ALL	'TO->FROM'	'GREENSBURG - SSTARTP3 115.00 115KV CKT 1	120.7	129.5	0.03956	114.6546	'HOLCOMB (HOLCOMB) 345/115/13.8KV TRANSFORMER CKT 1
13G	03ALL	'TO->FROM'	'GREENSBURG - SSTARTP3 115.00 115KV CKT 1	120.7	129.5	0.03272	114.6546	'HOLCOMB (HOLCOMB) 345/115/13.8KV TRANSFORMER CKT 1
13G	03ALL	'TO->FROM'	'GREENSBURG - SSTARTP3 115.00 115KV CKT 1	120.7	129.5	0.03272	114.6546	'HOLCOMB (HOLCOMB) 345/115/13.8KV TRANSFORMER CKT 1
13G	03ALL	'TO->FROM'	'GREENSBURG - SSTARTP3 115.00 115KV CKT 1	120.7	129.5	0.03632	114.6546	'HOLCOMB (HOLCOMB) 345/115/13.8KV TRANSFORMER CKT 1
13G	03ALL	'TO->FROM'	'GREENSBURG - SSTARTP3 115.00 115KV CKT 1	120.7	129.5	0.03627	114.6546	'HOLCOMB (HOLCOMB) 345/115/13.8KV TRANSFORMER CKT 1
13G	03ALL	'FROM->TO'	'HARPER - MILAN TAP 138KV CKT 1'	95.6	95.6	0.03555	152.9185	'HOLCOMB (HOLCOMB) 345/115/13.8KV TRANSFORMER CKT 1
13G	03ALL	'FROM->TO'	'HARPER - MILAN TAP 138KV CKT 1'	95.6	95.6	0.06287	152.9185	'HOLCOMB (HOLCOMB) 345/115/13.8KV TRANSFORMER CKT 1
13G	03ALL	'FROM->TO'	'HARPER - MILAN TAP 138KV CKT 1'	95.6	95.6	0.11067	152.9185	'HOLCOMB (HOLCOMB) 345/115/13.8KV TRANSFORMER CKT 1
13G	03ALL	'FROM->TO'	'HARPER - MILAN TAP 138KV CKT 1'	95.6	95.6	0.04834	152.9185	'HOLCOMB (HOLCOMB) 345/115/13.8KV TRANSFORMER CKT 1
13G	03ALL	'FROM->TO'	'HARPER - MILAN TAP 138KV CKT 1'	95.6	95.6	0.04834	152.9185	'HOLCOMB (HOLCOMB) 345/115/13.8KV TRANSFORMER CKT 1
13G	03ALL	'FROM->TO'	'HARPER - MILAN TAP 138KV CKT 1'	95.6	95.6	0.21201	152.9185	'HOLCOMB (HOLCOMB) 345/115/13.8KV TRANSFORMER CKT 1
13G	03ALL	'FROM->TO'	'HARPER - MILAN TAP 138KV CKT 1'	95.6	95.6	0.04292	152.9185	'HOLCOMB (HOLCOMB) 345/115/13.8KV TRANSFORMER CKT 1
13G	03ALL	'FROM->TO'	'HARPER - MILAN TAP 138KV CKT 1'	95.6	95.6	0.03862	152.9185	'HOLCOMB (HOLCOMB) 345/115/13.8KV TRANSFORMER CKT 1
13G	03ALL	'FROM->TO'	'HARPER - MILAN TAP 138KV CKT 1'	95.6	95.6	0.03862	152.9185	'HOLCOMB (HOLCOMB) 345/115/13.8KV TRANSFORMER CKT 1
13G	03ALL	'FROM->TO'	'HARPER - MILAN TAP 138KV CKT 1'	95.6	95.6	0.52772	152.9185	'HOLCOMB (HOLCOMB) 345/115/13.8KV TRANSFORMER CKT 1
13G	03ALL	'FROM->TO'	'HARPER - MILAN TAP 138KV CKT 1'	95.6	95.6	0.04051	152.9185	'HOLCOMB (HOLCOMB) 345/115/13.8KV TRANSFORMER CKT 1
13G	03ALL	'FROM->TO'	'HARPER - MILAN TAP 138KV CKT 1'	95.6	95.6	0.0423	152.9185	'HOLCOMB (HOLCOMB) 345/115/13.8KV TRANSFORMER CKT 1
13G	03ALL	'FROM->TO'	'HARPER - MILAN TAP 138KV CKT 1'	95.6	95.6	0.03489	152.9185	'HOLCOMB (HOLCOMB) 345/115/13.8KV TRANSFORMER CKT 1
13G	03ALL	'TO->FROM'	'MEDICINE LODGE - SUN CITY 115KV CKT 1'	120.7	129.5	0.18139	104.187	'HOLCOMB (HOLCOMB) 345/115/13.8KV TRANSFORMER CKT 1
13G	03ALL	'TO->FROM'	'MEDICINE LODGE - SUN CITY 115KV CKT 1'	120.7	129.5	0.04454	104.187	'HOLCOMB (HOLCOMB) 345/115/13.8KV TRANSFORMER CKT 1
13G	03ALL	'TO->FROM'	'MEDICINE LODGE - SUN CITY 115KV CKT 1'	120.7	129.5	0.04454	104.187	'HOLCOMB (HOLCOMB) 345/115/13.8KV TRANSFORMER CKT 1
13G	03ALL	'TO->FROM'	'MEDICINE LODGE - SUN CITY 115KV CKT 1'	120.7	129.5	0.40193	104.187	'HOLCOMB (HOLCOMB) 345/115/13.8KV TRANSFORMER CKT 1
13G	03ALL	'TO->FROM'	'MEDICINE LODGE - SUN CITY 115KV CKT 1'	120.7	129.5	0.03956	104.187	'HOLCOMB (HOLCOMB) 345/115/13.8KV TRANSFORMER CKT 1
13G	03ALL	'TO->FROM'	'MEDICINE LODGE - SUN CITY 115KV CKT 1'	120.7	129.5	0.03272	104.187	'HOLCOMB (HOLCOMB) 345/115/13.8KV TRANSFORMER CKT 1
13G	03ALL	'TO->FROM'	'MEDICINE LODGE - SUN CITY 115KV CKT 1'	120.7	129.5	0.03272	104.187	'HOLCOMB (HOLCOMB) 345/115/13.8KV TRANSFORMER CKT 1
13G	03ALL	'TO->FROM'	'MEDICINE LODGE - SUN CITY 115KV CKT 1'	120.7	129.5	0.03632	104.187	'HOLCOMB (HOLCOMB) 345/115/13.8KV TRANSFORMER CKT 1
13G	03ALL	'TO->FROM'	'MEDICINE LODGE - SUN CITY 115KV CKT 1'	120.7	129.5	0.03627	104.187	'HOLCOMB (HOLCOMB) 345/115/13.8KV TRANSFORMER CKT 1
13G	03ALL	'TO->FROM'	'BARBER 3 115.00 - MEDICINE LODGE 115KV CKT 1'	79.7	79.7	0.11852	102.9518	'HOLCOMB (HOLCOMB) 345/115/13.8KV TRANSFORMER CKT 1
13G	03ALL	'TO->FROM'	'BARBER 3 115.00 - MEDICINE LODGE 115KV CKT 1'	79.7	79.7	0.03475	102.9518	'HOLCOMB (HOLCOMB) 345/115/13.8KV TRANSFORMER CKT 1
13G	03ALL	'TO->FROM'	'BARBER 3 115.00 - MEDICINE LODGE 115KV CKT 1'	79.7	79.7	0.03475	102.9518	'HOLCOMB (HOLCOMB) 345/115/13.8KV TRANSFORMER CKT 1
13G	03ALL	'TO->FROM'	'BARBER 3 115.00 - MEDICINE LODGE 115KV CKT 1'	79.7	79.7	0.25375	102.9518	'HOLCOMB (HOLCOMB) 345/115/13.8KV TRANSFORMER CKT 1
13G	03ALL	'TO->FROM'	'BARBER 3 115.00 - MEDICINE LODGE 115KV CKT 1'	79.7	79.7	0.03086	102.9518	'HOLCOMB (HOLCOMB) 345/115/13.8KV TRANSFORMER CKT 1
13G	03ALL	'FROM->TO'	'SMOKYHL6 230.00 - SUMMIT 230KV CKT 1'	319	319	0.184	103.6944	'SPEARVILLE (SPEARVL) 345/230/13.8KV TRANSFORMER CKT 1
13G	03ALL	'FROM->TO'	'SMOKYHL6 230.00 - SUMMIT 230KV CKT 1'	319	319	0.08247	103.6944	'SPEARVILLE (SPEARVL) 345/230/13.8KV TRANSFORMER CKT 1
13G	03ALL	'FROM->TO'	'SMOKYHL6 230.00 - SUMMIT 230KV CKT 1'	319	319	0.07597	103.6944	'SPEARVILLE (SPEARVL) 345/230/13.8KV TRANSFORMER CKT 1
13G	03ALL	'FROM->TO'	'SMOKYHL6 230.00 - SUMMIT 230KV CKT 1'	319	319	0.08302	103.6944	'SPEARVILLE (SPEARVL) 345/230/13.8KV TRANSFORMER CKT 1
13G	03ALL	'FROM->TO'	'SMOKYHL6 230.00 - SUMMIT 230KV CKT 1'	319	319	0.08302	103.6944	'SPEARVILLE (SPEARVL) 345/230/13.8KV TRANSFORMER CKT 1
13G	03ALL	'FROM->TO'	'SMOKYHL6 230.00 - SUMMIT 230KV CKT 1'	319	319	0.05688	103.6944	'SPEARVILLE (SPEARVL) 345/230/13.8KV TRANSFORMER CKT 1
13G	03ALL	'FROM->TO'	'SMOKYHL6 230.00 - SUMMIT 230KV CKT 1'	319	319	0.10493	103.6944	'SPEARVILLE (SPEARVL) 345/230/13.8KV TRANSFORMER CKT 1
13G	03ALL	'FROM->TO'	'SMOKYHL6 230.00 - SUMMIT 230KV CKT 1'	319	319	0.1254	103.6944	'SPEARVILLE (SPEARVL) 345/230/13.8KV TRANSFORMER CKT 1
13G	03ALL	'FROM->TO'	'SMOKYHL6 230.00 - SUMMIT 230KV CKT 1'	319	319	0.1254	103.6944	'SPEARVILLE (SPEARVL) 345/230/13.8KV TRANSFORMER CKT 1

SEASON	GROUP	DIRECTION	MONITORED ELEMENT	RATE A (MVA)	RATE B (MVA)	TDF	TC%LOADING (%MVA)	CONTINGENCY NAME
13G	03ALL	'FROM->TO'	'SMOKYHL6 230.00 - SUMMIT 230KV CKT 1'	319	319	0.62549	103.6944	'SPEARVILLE (SPEARVL) 345/230/13.8KV TRANSFORMER CKT 1
13G	03ALL	'FROM->TO'	'SMOKYHL6 230.00 - SUMMIT 230KV CKT 1'	319	319	0.10485	103.6944	'SPEARVILLE (SPEARVL) 345/230/13.8KV TRANSFORMER CKT 1
13G	03ALL	'FROM->TO'	'SMOKYHL6 230.00 - SUMMIT 230KV CKT 1'	319	319	0.1405	103.6944	'SPEARVILLE (SPEARVL) 345/230/13.8KV TRANSFORMER CKT 1
13G	03ALL	'FROM->TO'	'SMOKYHL6 230.00 - SUMMIT 230KV CKT 1'	319	319	0.11014	103.6944	'SPEARVILLE (SPEARVL) 345/230/13.8KV TRANSFORMER CKT 1
13G	03ALL	'TO->FROM'	'CLEARWATER - MILAN TAP 138KV CKT 1'	110	110	0.03726	131.7369	'SPEARVILLE (SPEARVL) 345/230/13.8KV TRANSFORMER CKT 1
13G	03ALL	'TO->FROM'	'CLEARWATER - MILAN TAP 138KV CKT 1'	110	110	0.07039	131.7369	'SPEARVILLE (SPEARVL) 345/230/13.8KV TRANSFORMER CKT 1
13G	03ALL	'TO->FROM'	'CLEARWATER - MILAN TAP 138KV CKT 1'	110	110	0.13915	131.7369	'SPEARVILLE (SPEARVL) 345/230/13.8KV TRANSFORMER CKT 1
13G	03ALL	'TO->FROM'	'CLEARWATER - MILAN TAP 138KV CKT 1'	110	110	0.09248	131.7369	'SPEARVILLE (SPEARVL) 345/230/13.8KV TRANSFORMER CKT 1
13G	03ALL	'TO->FROM'	'CLEARWATER - MILAN TAP 138KV CKT 1'	110	110	0.09248	131.7369	'SPEARVILLE (SPEARVL) 345/230/13.8KV TRANSFORMER CKT 1
13G	03ALL	'TO->FROM'	'CLEARWATER - MILAN TAP 138KV CKT 1'	110	110	0.23415	131.7369	'SPEARVILLE (SPEARVL) 345/230/13.8KV TRANSFORMER CKT 1
13G	03ALL	'TO->FROM'	'CLEARWATER - MILAN TAP 138KV CKT 1'	110	110	0.03189	131.7369	'SPEARVILLE (SPEARVL) 345/230/13.8KV TRANSFORMER CKT 1
13G	03ALL	'TO->FROM'	'CLEARWATER - MILAN TAP 138KV CKT 1'	110	110	0.53709	131.7369	'SPEARVILLE (SPEARVL) 345/230/13.8KV TRANSFORMER CKT 1
13G	03ALL	'TO->FROM'	'CLEARWATER - MILAN TAP 138KV CKT 1'	110	110	0.03141	131.7369	'SPEARVILLE (SPEARVL) 345/230/13.8KV TRANSFORMER CKT 1
13G	03ALL	'FROM->TO'	'GREENSBURG - SUN CITY 115KV CKT 1'	120.7	129.5	0.21889	112.4346	'SPEARVILLE (SPEARVL) 345/230/13.8KV TRANSFORMER CKT 1
13G	03ALL	'FROM->TO'	'GREENSBURG - SUN CITY 115KV CKT 1'	120.7	129.5	0.10418	112.4346	'SPEARVILLE (SPEARVL) 345/230/13.8KV TRANSFORMER CKT 1
13G	03ALL	'FROM->TO'	'GREENSBURG - SUN CITY 115KV CKT 1'	120.7	129.5	0.10418	112.4346	'SPEARVILLE (SPEARVL) 345/230/13.8KV TRANSFORMER CKT 1
13G	03ALL	'FROM->TO'	'GREENSBURG - SUN CITY 115KV CKT 1'	120.7	129.5	0.4311	112.4346	'SPEARVILLE (SPEARVL) 345/230/13.8KV TRANSFORMER CKT 1
13G	03ALL	'TO->FROM'	'GREENSBURG - SSTARTP3 115.00 115KV CKT 1	120.7	129.5	0.21889	120.3483	'SPEARVILLE (SPEARVL) 345/230/13.8KV TRANSFORMER CKT 1
13G	03ALL	'TO->FROM'	'GREENSBURG - SSTARTP3 115.00 115KV CKT 1	120.7	129.5	0.10418	120.3483	'SPEARVILLE (SPEARVL) 345/230/13.8KV TRANSFORMER CKT 1
13G	03ALL	'TO->FROM'	'GREENSBURG - SSTARTP3 115.00 115KV CKT 1	120.7	129.5	0.10418	120.3483	'SPEARVILLE (SPEARVL) 345/230/13.8KV TRANSFORMER CKT 1
13G	03ALL	'TO->FROM'	'GREENSBURG - SSTARTP3 115.00 115KV CKT 1	120.7	129.5	0.4311	120.3483	'SPEARVILLE (SPEARVL) 345/230/13.8KV TRANSFORMER CKT 1
13G	03ALL	'FROM->TO'	'HARPER - MILAN TAP 138KV CKT 1'	95.6	95.6	0.03726	158.7695	'SPEARVILLE (SPEARVL) 345/230/13.8KV TRANSFORMER CKT 1
13G	03ALL	'FROM->TO'	'HARPER - MILAN TAP 138KV CKT 1'	95.6	95.6	0.07039	158.7695	'SPEARVILLE (SPEARVL) 345/230/13.8KV TRANSFORMER CKT 1
13G	03ALL	'FROM->TO'	'HARPER - MILAN TAP 138KV CKT 1'	95.6	95.6	0.13915	158.7695	'SPEARVILLE (SPEARVL) 345/230/13.8KV TRANSFORMER CKT 1
13G	03ALL	'FROM->TO'	'HARPER - MILAN TAP 138KV CKT 1'	95.6	95.6	0.09248	158.7695	'SPEARVILLE (SPEARVL) 345/230/13.8KV TRANSFORMER CKT 1
13G	03ALL	'FROM->TO'	'HARPER - MILAN TAP 138KV CKT 1'	95.6	95.6	0.09248	158.7695	'SPEARVILLE (SPEARVL) 345/230/13.8KV TRANSFORMER CKT 1
13G	03ALL	'FROM->TO'	'HARPER - MILAN TAP 138KV CKT 1'	95.6	95.6	0.23415	158.7695	'SPEARVILLE (SPEARVL) 345/230/13.8KV TRANSFORMER CKT 1
13G	03ALL	'FROM->TO'	'HARPER - MILAN TAP 138KV CKT 1'	95.6	95.6	0.03189	158.7695	'SPEARVILLE (SPEARVL) 345/230/13.8KV TRANSFORMER CKT 1
13G	03ALL	'FROM->TO'	'HARPER - MILAN TAP 138KV CKT 1'	95.6	95.6	0.53709	158.7695	'SPEARVILLE (SPEARVL) 345/230/13.8KV TRANSFORMER CKT 1
13G	03ALL	'FROM->TO'	'HARPER - MILAN TAP 138KV CKT 1'	95.6	95.6	0.03141	158.7695	'SPEARVILLE (SPEARVL) 345/230/13.8KV TRANSFORMER CKT 1
13G	03ALL	'TO->FROM'	'MEDICINE LODGE - SUN CITY 115KV CKT 1'	120.7	129.5	0.21889	109.8321	'SPEARVILLE (SPEARVL) 345/230/13.8KV TRANSFORMER CKT 1
13G	03ALL	'TO->FROM'	'MEDICINE LODGE - SUN CITY 115KV CKT 1'	120.7	129.5	0.10418	109.8321	'SPEARVILLE (SPEARVL) 345/230/13.8KV TRANSFORMER CKT 1
13G	03ALL	'TO->FROM'	'MEDICINE LODGE - SUN CITY 115KV CKT 1'	120.7	129.5	0.10418	109.8321	'SPEARVILLE (SPEARVL) 345/230/13.8KV TRANSFORMER CKT 1
13G	03ALL	'TO->FROM'	'MEDICINE LODGE - SUN CITY 115KV CKT 1'	120.7	129.5	0.4311	109.8321	'SPEARVILLE (SPEARVL) 345/230/13.8KV TRANSFORMER CKT 1
13G	03ALL	'TO->FROM'	'BARBER 3 115.00 - MEDICINE LODGE 115KV CKT 1'	79.7	79.7	0.14452	109.6595	'SPEARVILLE (SPEARVL) 345/230/13.8KV TRANSFORMER CKT 1
13G	03ALL	'TO->FROM'	'BARBER 3 115.00 - MEDICINE LODGE 115KV CKT 1'	79.7	79.7	0.07579	109.6595	'SPEARVILLE (SPEARVL) 345/230/13.8KV TRANSFORMER CKT 1
13G	03ALL	'TO->FROM'	'BARBER 3 115.00 - MEDICINE LODGE 115KV CKT 1'	79.7	79.7	0.07579	109.6595	'SPEARVILLE (SPEARVL) 345/230/13.8KV TRANSFORMER CKT 1
13G	03ALL	'TO->FROM'	'BARBER 3 115.00 - MEDICINE LODGE 115KV CKT 1'	79.7	79.7	0.27397	109.6595	'SPEARVILLE (SPEARVL) 345/230/13.8KV TRANSFORMER CKT 1
13G	03ALL	'TO->FROM'	'MULLERGREN - SPEARVILLE 230KV CKT 1'	330.3	355.3	0.53993	101.7386	'SPEARVILLE (SPEARVL) 345/230/13.8KV TRANSFORMER CKT 1
13G	03ALL	'TO->FROM'	'MULLERGREN - SPEARVILLE 230KV CKT 1'	330.3	355.3	0.76904	101.7386	'SPEARVILLE (SPEARVL) 345/230/13.8KV TRANSFORMER CKT 1
13G	03ALL	'TO->FROM'	'MULLERGREN - SPEARVILLE 230KV CKT 1'	330.3	355.3	0.76904	101.7386	'SPEARVILLE (SPEARVL) 345/230/13.8KV TRANSFORMER CKT 1
13G	03ALL	'TO->FROM'	'MULLERGREN - SPEARVILLE 230KV CKT 1'	330.3	355.3	0.38433	101.7386	'SPEARVILLE (SPEARVL) 345/230/13.8KV TRANSFORMER CKT 1
13G	03ALL	'TO->FROM'	'MULLERGREN - SPEARVILLE 230KV CKT 1'	330.3	355.3	0.09395	101.7386	'SPEARVILLE (SPEARVL) 345/230/13.8KV TRANSFORMER CKT 1
13G	03ALL	'FROM->TO'	'SMOKYHL6 230.00 - SUMMIT 230KV CKT 1'	319	319	0.16448	103.1436	'SUMMIT (SUMMIT1X) 345/230/14.4KV TRANSFORMER CKT 1'
13G	03ALL	'FROM->TO'	'SMOKYHL6 230.00 - SUMMIT 230KV CKT 1'	319	319	0.0742	103.1436	'SUMMIT (SUMMIT1X) 345/230/14.4KV TRANSFORMER CKT 1'
13G	03ALL	'FROM->TO'	'SMOKYHL6 230.00 - SUMMIT 230KV CKT 1'	319	319	0.08953	103.1436	'SUMMIT (SUMMIT1X) 345/230/14.4KV TRANSFORMER CKT 1'
13G	03ALL	'FROM->TO'	'SMOKYHL6 230.00 - SUMMIT 230KV CKT 1'	319	319	0.10646	103.1436	'SUMMIT (SUMMIT1X) 345/230/14.4KV TRANSFORMER CKT 1'
13G	03ALL	'FROM->TO'	'SMOKYHL6 230.00 - SUMMIT 230KV CKT 1'	319	319	0.10646	103.1436	'SUMMIT (SUMMIT1X) 345/230/14.4KV TRANSFORMER CKT 1'
13G	03ALL	'FROM->TO'	'SMOKYHL6 230.00 - SUMMIT 230KV CKT 1'	319	319	0.06678	103.1436	'SUMMIT (SUMMIT1X) 345/230/14.4KV TRANSFORMER CKT 1'
13G	03ALL	'FROM->TO'	'SMOKYHL6 230.00 - SUMMIT 230KV CKT 1'	319	319	0.08722	103.1436	'SUMMIT (SUMMIT1X) 345/230/14.4KV TRANSFORMER CKT 1'
13G	03ALL	'FROM->TO'	'SMOKYHL6 230.00 - SUMMIT 230KV CKT 1'	319	319	0.1009	103.1436	'SUMMIT (SUMMIT1X) 345/230/14.4KV TRANSFORMER CKT 1'
13G	03ALL	'FROM->TO'	'SMOKYHL6 230.00 - SUMMIT 230KV CKT 1'	319	319	0.1009	103.1436	'SUMMIT (SUMMIT1X) 345/230/14.4KV TRANSFORMER CKT 1'
13G	03ALL	'FROM->TO'	'SMOKYHL6 230.00 - SUMMIT 230KV CKT 1'	319	319	0.57589	103.1436	'SUMMIT (SUMMIT1X) 345/230/14.4KV TRANSFORMER CKT 1'
13G	03ALL	'FROM->TO'	'SMOKYHL6 230.00 - SUMMIT 230KV CKT 1'	319	319	0.08729	103.1436	'SUMMIT (SUMMIT1X) 345/230/14.4KV TRANSFORMER CKT 1'
13G	03ALL	'FROM->TO'	'SMOKYHL6 230.00 - SUMMIT 230KV CKT 1'	319	319	0.11176	103.1436	'SUMMIT (SUMMIT1X) 345/230/14.4KV TRANSFORMER CKT 1'
13G	03ALL	'FROM->TO'	'SMOKYHL6 230.00 - SUMMIT 230KV CKT 1'	319	319	0.08991	103.1436	'SUMMIT (SUMMIT1X) 345/230/14.4KV TRANSFORMER CKT 1'
13G	03ALL	'FROM->TO'	'SMOKYHL6 230.00 - SUMMIT 230KV CKT 1'	319	319	0.18757	107.1203	'CIRCLE (CIRCLE1X) 230/115/13.8KV TRANSFORMER CKT 1'
13G	03ALL	'FROM->TO'	'SMOKYHL6 230.00 - SUMMIT 230KV CKT 1'	319	319	0.09193	107.1203	'CIRCLE (CIRCLE1X) 230/115/13.8KV TRANSFORMER CKT 1'
13G	03ALL	'FROM->TO'	'SMOKYHL6 230.00 - SUMMIT 230KV CKT 1'	319	319	0.1047	107.1203	'CIRCLE (CIRCLE1X) 230/115/13.8KV TRANSFORMER CKT 1'
13G	03ALL	'FROM->TO'	'SMOKYHL6 230.00 - SUMMIT 230KV CKT 1'	319	319	0.12409	107.1203	'CIRCLE (CIRCLE1X) 230/115/13.8KV TRANSFORMER CKT 1'
13G	03ALL	'FROM->TO'	'SMOKYHL6 230.00 - SUMMIT 230KV CKT 1'	319	319	0.12409	107.1203	'CIRCLE (CIRCLE1X) 230/115/13.8KV TRANSFORMER CKT 1'
13G	03ALL	'FROM->TO'	'SMOKYHL6 230.00 - SUMMIT 230KV CKT 1'	319	319	0.07897	107.1203	'CIRCLE (CIRCLE1X) 230/115/13.8KV TRANSFORMER CKT 1'
13G	03ALL	'FROM->TO'	'SMOKYHL6 230.00 - SUMMIT 230KV CKT 1'	319	319	0.10131	107.1203	'CIRCLE (CIRCLE1X) 230/115/13.8KV TRANSFORMER CKT 1'
13G	03ALL	'FROM->TO'	'SMOKYHL6 230.00 - SUMMIT 230KV CKT 1'	319	319	0.11662	107.1203	'CIRCLE (CIRCLE1X) 230/115/13.8KV TRANSFORMER CKT 1'

SEASON	GROUP	DIRECTION	MONITORED ELEMENT	RATE A (MVA)	RATE B (MVA)	TDF	TC%LOADING (%MVA)	CONTINGENCY NAME
13G	03ALL	'FROM->TO'	'SMOKYHL6 230.00 - SUMMIT 230KV CKT 1'	319	319	0.11662	107.1203	'CIRCLE (CIRCLE1X) 230/115/13.8KV TRANSFORMER CKT 1'
13G	03ALL	'FROM->TO'	'SMOKYHL6 230.00 - SUMMIT 230KV CKT 1'	319	319	0.62789	107.1203	'CIRCLE (CIRCLE1X) 230/115/13.8KV TRANSFORMER CKT 1'
13G	03ALL	'FROM->TO'	'SMOKYHL6 230.00 - SUMMIT 230KV CKT 1'	319	319	0.10129	107.1203	'CIRCLE (CIRCLE1X) 230/115/13.8KV TRANSFORMER CKT 1'
13G	03ALL	'FROM->TO'	'SMOKYHL6 230.00 - SUMMIT 230KV CKT 1'	319	319	0.1291	107.1203	'CIRCLE (CIRCLE1X) 230/115/13.8KV TRANSFORMER CKT 1'
13G	03ALL	'FROM->TO'	'SMOKYHL6 230.00 - SUMMIT 230KV CKT 1'	319	319	0.10398	107.1203	'CIRCLE (CIRCLE1X) 230/115/13.8KV TRANSFORMER CKT 1'
13G	03ALL	'FROM->TO'	'ST JOHN - ST_JOHN 115KV CKT 1'	86	86	0.03716	104.9214	'CIRCLE (CIRCLE1X) 230/115/13.8KV TRANSFORMER CKT 1'
13G	03ALL	'FROM->TO'	'ST JOHN - ST_JOHN 115KV CKT 1'	86	86	0.08905	104.9214	'CIRCLE (CIRCLE1X) 230/115/13.8KV TRANSFORMER CKT 1'
13G	03ALL	'FROM->TO'	'ST JOHN - ST_JOHN 115KV CKT 1'	86	86	0.06154	104.9214	'CIRCLE (CIRCLE1X) 230/115/13.8KV TRANSFORMER CKT 1'
13G	03ALL	'FROM->TO'	'ST JOHN - ST_JOHN 115KV CKT 1'	86	86	0.04174	104.9214	'CIRCLE (CIRCLE1X) 230/115/13.8KV TRANSFORMER CKT 1'
13G	03ALL	'FROM->TO'	'ST JOHN - ST_JOHN 115KV CKT 1'	86	86	0.04174	104.9214	'CIRCLE (CIRCLE1X) 230/115/13.8KV TRANSFORMER CKT 1'
13G	03ALL	'FROM->TO'	'ST JOHN - ST_JOHN 115KV CKT 1'	86	86	0.09667	104.9214	'CIRCLE (CIRCLE1X) 230/115/13.8KV TRANSFORMER CKT 1'
13G	03ALL	'FROM->TO'	'ST JOHN - ST_JOHN 115KV CKT 1'	86	86	0.03466	104.9214	'CIRCLE (CIRCLE1X) 230/115/13.8KV TRANSFORMER CKT 1'
13G	03ALL	'FROM->TO'	'ST JOHN - ST_JOHN 115KV CKT 1'	86	86	0.03466	104.9214	'CIRCLE (CIRCLE1X) 230/115/13.8KV TRANSFORMER CKT 1'
13G	03ALL	'FROM->TO'	'ST JOHN - ST_JOHN 115KV CKT 1'	86	86	0.03466	104.9214	'CIRCLE (CIRCLE1X) 230/115/13.8KV TRANSFORMER CKT 1'
13G	03ALL	'FROM->TO'	'ST JOHN - ST_JOHN 115KV CKT 1'	86	86	0.11521	104.9214	'CIRCLE (CIRCLE1X) 230/115/13.8KV TRANSFORMER CKT 1'
13G	03ALL	'FROM->TO'	'ST JOHN - ST_JOHN 115KV CKT 1'	86	86	0.03376	104.9214	'CIRCLE (CIRCLE1X) 230/115/13.8KV TRANSFORMER CKT 1'
13G	03ALL	'FROM->TO'	'ST JOHN - ST_JOHN 115KV CKT 1'	86	86	0.03741	104.9214	'CIRCLE (CIRCLE1X) 230/115/13.8KV TRANSFORMER CKT 1'
13G	03ALL	'FROM->TO'	'ST JOHN - ST_JOHN 115KV CKT 1'	86	86	0.03185	104.9214	'CIRCLE (CIRCLE1X) 230/115/13.8KV TRANSFORMER CKT 1'
13G	03ALL	'TO->FROM'	'GREENSBURG - SSTARTP3 115.00 115KV CKT 1	120.7	129.5	0.17882	109.7143	'CIRCLE (CIRCLE1X) 230/115/13.8KV TRANSFORMER CKT 1'
13G	03ALL	'TO->FROM'	'GREENSBURG - SSTARTP3 115.00 115KV CKT 1	120.7	129.5	0.04636	109.7143	'CIRCLE (CIRCLE1X) 230/115/13.8KV TRANSFORMER CKT 1'
13G	03ALL	'TO->FROM'	'GREENSBURG - SSTARTP3 115.00 115KV CKT 1	120.7	129.5	0.04636	109.7143	'CIRCLE (CIRCLE1X) 230/115/13.8KV TRANSFORMER CKT 1'
13G	03ALL	'TO->FROM'	'GREENSBURG - SSTARTP3 115.00 115KV CKT 1	120.7	129.5	0.39987	109.7143	'CIRCLE (CIRCLE1X) 230/115/13.8KV TRANSFORMER CKT 1'
13G	03ALL	'TO->FROM'	'GREENSBURG - SSTARTP3 115.00 115KV CKT 1	120.7	129.5	0.03115	109.7143	'CIRCLE (CIRCLE1X) 230/115/13.8KV TRANSFORMER CKT 1'
13G	03ALL	'TO->FROM'	'GREENSBURG - SSTARTP3 115.00 115KV CKT 1	120.7	129.5	0.03548	109.7143	'CIRCLE (CIRCLE1X) 230/115/13.8KV TRANSFORMER CKT 1'
13G	03ALL	'TO->FROM'	'GREENSBURG - SSTARTP3 115.00 115KV CKT 1	120.7	129.5	0.03548	109.7143	'CIRCLE (CIRCLE1X) 230/115/13.8KV TRANSFORMER CKT 1'
13G	03ALL	'TO->FROM'	'GREENSBURG - SSTARTP3 115.00 115KV CKT 1	120.7	129.5	0.0312	109.7143	'CIRCLE (CIRCLE1X) 230/115/13.8KV TRANSFORMER CKT 1'
13G	03ALL	'TO->FROM'	'GREENSBURG - SSTARTP3 115.00 115KV CKT 1	120.7	129.5	0.03843	109.7143	'CIRCLE (CIRCLE1X) 230/115/13.8KV TRANSFORMER CKT 1'
13G	03ALL	'TO->FROM'	'GREENSBURG - SSTARTP3 115.00 115KV CKT 1	120.7	129.5	0.03248	109.7143	'CIRCLE (CIRCLE1X) 230/115/13.8KV TRANSFORMER CKT 1'
13G	03ALL	'FROM->TO'	'SMOKYHL6 230.00 - SUMMIT 230KV CKT 1'	319	319	0.19049	101.6749	'CONCORDIA (CONCORD6) 230/115/13.8KV TRANSFORMER CKT 1'
13G	03ALL	'FROM->TO'	'SMOKYHL6 230.00 - SUMMIT 230KV CKT 1'	319	319	0.09527	101.6749	'CONCORDIA (CONCORD6) 230/115/13.8KV TRANSFORMER CKT 1'
13G	03ALL	'FROM->TO'	'SMOKYHL6 230.00 - SUMMIT 230KV CKT 1'	319	319	0.10718	101.6749	'CONCORDIA (CONCORD6) 230/115/13.8KV TRANSFORMER CKT 1'
13G	03ALL	'FROM->TO'	'SMOKYHL6 230.00 - SUMMIT 230KV CKT 1'	319	319	0.12655	101.6749	'CONCORDIA (CONCORD6) 230/115/13.8KV TRANSFORMER CKT 1'
13G	03ALL	'FROM->TO'	'SMOKYHL6 230.00 - SUMMIT 230KV CKT 1'	319	319	0.12655	101.6749	'CONCORDIA (CONCORD6) 230/115/13.8KV TRANSFORMER CKT 1'
13G	03ALL	'FROM->TO'	'SMOKYHL6 230.00 - SUMMIT 230KV CKT 1'	319	319	0.08134	101.6749	'CONCORDIA (CONCORD6) 230/115/13.8KV TRANSFORMER CKT 1'
13G	03ALL	'FROM->TO'	'SMOKYHL6 230.00 - SUMMIT 230KV CKT 1'	319	319	0.1043	101.6749	'CONCORDIA (CONCORD6) 230/115/13.8KV TRANSFORMER CKT 1'
13G	03ALL	'FROM->TO'	'SMOKYHL6 230.00 - SUMMIT 230KV CKT 1'	319	319	0.11925	101.6749	'CONCORDIA (CONCORD6) 230/115/13.8KV TRANSFORMER CKT 1'
13G	03ALL	'FROM->TO'	'SMOKYHL6 230.00 - SUMMIT 230KV CKT 1'	319	319	0.11925	101.6749	'CONCORDIA (CONCORD6) 230/115/13.8KV TRANSFORMER CKT 1'
13G	03ALL	'FROM->TO'	'SMOKYHL6 230.00 - SUMMIT 230KV CKT 1'	319	319	0.62741	101.6749	'CONCORDIA (CONCORD6) 230/115/13.8KV TRANSFORMER CKT 1'
13G	03ALL	'FROM->TO'	'SMOKYHL6 230.00 - SUMMIT 230KV CKT 1'	319	319	0.10444	101.6749	'CONCORDIA (CONCORD6) 230/115/13.8KV TRANSFORMER CKT 1'
13G	03ALL	'FROM->TO'	'SMOKYHL6 230.00 - SUMMIT 230KV CKT 1'	319	319	0.13168	101.6749	'CONCORDIA (CONCORD6) 230/115/13.8KV TRANSFORMER CKT 1'
13G	03ALL	'FROM->TO'	'SMOKYHL6 230.00 - SUMMIT 230KV CKT 1'	319	319	0.10667	101.6749	'CONCORDIA (CONCORD6) 230/115/13.8KV TRANSFORMER CKT 1'
13G	03ALL	'TO->FROM'	'BARBER 3 115.00 - MEDICINE LODGE 115KV CKT 1'	79.7	79.7	0.14149	114.0442	'MEDICINE LODGE (MED-LDG4) 138/115/2.72KV TRANSFORMER CKT 1'
13G	03ALL	'TO->FROM'	'BARBER 3 115.00 - MEDICINE LODGE 115KV CKT 1'	79.7	79.7	0.04592	114.0442	'MEDICINE LODGE (MED-LDG4) 138/115/2.72KV TRANSFORMER CKT 1'
13G	03ALL	'TO->FROM'	'BARBER 3 115.00 - MEDICINE LODGE 115KV CKT 1'	79.7	79.7	0.04592	114.0442	'MEDICINE LODGE (MED-LDG4) 138/115/2.72KV TRANSFORMER CKT 1'
13G	03ALL	'TO->FROM'	'BARBER 3 115.00 - MEDICINE LODGE 115KV CKT 1'	79.7	79.7	0.30171	114.0442	'MEDICINE LODGE (MED-LDG4) 138/115/2.72KV TRANSFORMER CKT 1'
13G	03ALL	'TO->FROM'	'BARBER 3 115.00 - MEDICINE LODGE 115KV CKT 1'	79.7	79.7	0.03321	114.0442	'MEDICINE LODGE (MED-LDG4) 138/115/2.72KV TRANSFORMER CKT 1'
13G	03ALL	'TO->FROM'	'BARBER 3 115.00 - MEDICINE LODGE 115KV CKT 1'	79.7	79.7	0.03622	114.0442	'MEDICINE LODGE (MED-LDG4) 138/115/2.72KV TRANSFORMER CKT 1'
13G	03ALL	'TO->FROM'	'BARBER 3 115.00 - MEDICINE LODGE 115KV CKT 1'	79.7	79.7	0.03622	114.0442	'MEDICINE LODGE (MED-LDG4) 138/115/2.72KV TRANSFORMER CKT 1'
13G	03ALL	'TO->FROM'	'BARBER 3 115.00 - MEDICINE LODGE 115KV CKT 1'	79.7	79.7	0.03297	114.0442	'MEDICINE LODGE (MED-LDG4) 138/115/2.72KV TRANSFORMER CKT 1'
13G	03ALL	'TO->FROM'	'BARBER 3 115.00 - MEDICINE LODGE 115KV CKT 1'	79.7	79.7	0.03921	114.0442	'MEDICINE LODGE (MED-LDG4) 138/115/2.72KV TRANSFORMER CKT 1'
13G	03ALL	'TO->FROM'	'BARBER 3 115.00 - MEDICINE LODGE 115KV CKT 1'	79.7	79.7	0.03318	114.0442	'MEDICINE LODGE (MED-LDG4) 138/115/2.72KV TRANSFORMER CKT 1'
13G	03ALL	'TO->FROM'	'CLEARWATER - MILAN TAP 138KV CKT 1'	110	110	0.03249	118.483	'MEDICINE LODGE (BARBER 4) 138/115/2.72KV TRANSFORMER CKT 1
13G	03ALL	'TO->FROM'	'CLEARWATER - MILAN TAP 138KV CKT 1'	110	110	0.05674	118.483	'MEDICINE LODGE (BARBER 4) 138/115/2.72KV TRANSFORMER CKT 1
13G	03ALL	'TO->FROM'	'CLEARWATER - MILAN TAP 138KV CKT 1'	110	110	0.09921	118.483	'MEDICINE LODGE (BARBER 4) 138/115/2.72KV TRANSFORMER CKT 1
13G	03ALL	'TO->FROM'	'CLEARWATER - MILAN TAP 138KV CKT 1'	110	110	0.04425	118.483	'MEDICINE LODGE (BARBER 4) 138/115/2.72KV TRANSFORMER CKT 1
13G	03ALL	'TO->FROM'	'CLEARWATER - MILAN TAP 138KV CKT 1'	110	110	0.04425	118.483	'MEDICINE LODGE (BARBER 4) 138/115/2.72KV TRANSFORMER CKT 1
13G	03ALL	'TO->FROM'	'CLEARWATER - MILAN TAP 138KV CKT 1'	110	110	0.19242	118.483	'MEDICINE LODGE (BARBER 4) 138/115/2.72KV TRANSFORMER CKT 1
13G	03ALL	'TO->FROM'	'CLEARWATER - MILAN TAP 138KV CKT 1'	110	110	0.03428	118.483	'MEDICINE LODGE (BARBER 4) 138/115/2.72KV TRANSFORMER CKT 1
13G	03ALL	'TO->FROM'	'CLEARWATER - MILAN TAP 138KV CKT 1'	110	110	0.03599	118.483	'MEDICINE LODGE (BARBER 4) 138/115/2.72KV TRANSFORMER CKT 1
13G	03ALL	'TO->FROM'	'CLEARWATER - MILAN TAP 138KV CKT 1'	110	110	0.03599	118.483	'MEDICINE LODGE (BARBER 4) 138/115/2.72KV TRANSFORMER CKT 1
13G	03ALL	'TO->FROM'	'CLEARWATER - MILAN TAP 138KV CKT 1'	110	110	0.56839	118.483	'MEDICINE LODGE (BARBER 4) 138/115/2.72KV TRANSFORMER CKT 1
13G	03ALL	'TO->FROM'	'CLEARWATER - MILAN TAP 138KV CKT 1'	110	110	0.03376	118.483	'MEDICINE LODGE (BARBER 4) 138/115/2.72KV TRANSFORMER CKT 1
13G	03ALL	'TO->FROM'	'CLEARWATER - MILAN TAP 138KV CKT 1'	110	110	0.03896	118.483	'MEDICINE LODGE (BARBER 4) 138/115/2.72KV TRANSFORMER CKT 1
13G	03ALL	'TO->FROM'	'CLEARWATER - MILAN TAP 138KV CKT 1'	110	110	0.03296	118.483	'MEDICINE LODGE (BARBER 4) 138/115/2.72KV TRANSFORMER CKT 1

SEASON	GROUP	DIRECTION	MONITORED ELEMENT	RATE A (MVA)	RATE B (MVA)	TDF	TC%LOADING (%MVA)	CONTINGENCY NAME
13G	03ALL	'FROM->TO'	'HARPER - MILAN TAP 138KV CKT 1'	95.6	95.6	0.03249	143.7416	'MEDICINE LODGE (BARBER 4) 138/115/2.72KV TRANSFORMER CKT 1
13G	03ALL	'FROM->TO'	'HARPER - MILAN TAP 138KV CKT 1'	95.6	95.6	0.05674	143.7416	'MEDICINE LODGE (BARBER 4) 138/115/2.72KV TRANSFORMER CKT 1
13G	03ALL	'FROM->TO'	'HARPER - MILAN TAP 138KV CKT 1'	95.6	95.6	0.09921	143.7416	'MEDICINE LODGE (BARBER 4) 138/115/2.72KV TRANSFORMER CKT 1
13G	03ALL	'FROM->TO'	'HARPER - MILAN TAP 138KV CKT 1'	95.6	95.6	0.04425	143.7416	'MEDICINE LODGE (BARBER 4) 138/115/2.72KV TRANSFORMER CKT 1
13G	03ALL	'FROM->TO'	'HARPER - MILAN TAP 138KV CKT 1'	95.6	95.6	0.04425	143.7416	'MEDICINE LODGE (BARBER 4) 138/115/2.72KV TRANSFORMER CKT 1
13G	03ALL	'FROM->TO'	'HARPER - MILAN TAP 138KV CKT 1'	95.6	95.6	0.19242	143.7416	'MEDICINE LODGE (BARBER 4) 138/115/2.72KV TRANSFORMER CKT 1
13G	03ALL	'FROM->TO'	'HARPER - MILAN TAP 138KV CKT 1'	95.6	95.6	0.03428	143.7416	'MEDICINE LODGE (BARBER 4) 138/115/2.72KV TRANSFORMER CKT 1
13G	03ALL	'FROM->TO'	'HARPER - MILAN TAP 138KV CKT 1'	95.6	95.6	0.03599	143.7416	'MEDICINE LODGE (BARBER 4) 138/115/2.72KV TRANSFORMER CKT 1
13G	03ALL	'FROM->TO'	'HARPER - MILAN TAP 138KV CKT 1'	95.6	95.6	0.03599	143.7416	'MEDICINE LODGE (BARBER 4) 138/115/2.72KV TRANSFORMER CKT 1
13G	03ALL	'FROM->TO'	'HARPER - MILAN TAP 138KV CKT 1'	95.6	95.6	0.56839	143.7416	'MEDICINE LODGE (BARBER 4) 138/115/2.72KV TRANSFORMER CKT 1
13G	03ALL	'FROM->TO'	'HARPER - MILAN TAP 138KV CKT 1'	95.6	95.6	0.03376	143.7416	'MEDICINE LODGE (BARBER 4) 138/115/2.72KV TRANSFORMER CKT 1
13G	03ALL	'FROM->TO'	'HARPER - MILAN TAP 138KV CKT 1'	95.6	95.6	0.03896	143.7416	'MEDICINE LODGE (BARBER 4) 138/115/2.72KV TRANSFORMER CKT 1
13G	03ALL	'FROM->TO'	'HARPER - MILAN TAP 138KV CKT 1'	95.6	95.6	0.03296	143.7416	'MEDICINE LODGE (BARBER 4) 138/115/2.72KV TRANSFORMER CKT 1
13G	03ALL	'FROM->TO'	'SPEARVILLE (SPWIND 2) 230/34.5/13.8KV TRANSFORMER CKT 1	108	144	1	104.5511	'SPEARVILLE (SPWIND 1) 230/34.5/13.8KV TRANSFORMER CKT 1
13G	03ALL	'FROM->TO'	'SPEARVILLE (SPWIND 1) 230/34.5/13.8KV TRANSFORMER CKT 1	75	100	1	149.762	'SPEARVILLE (SPWIND 2) 230/34.5/13.8KV TRANSFORMER CKT 1
13G	03ALL	'FROM->TO'	'SMOKYHL6 230.00 - SUMMIT 230KV CKT 1'	319	319	0.1866	106.0862	'AXTELL (AXTELL T1) 345/115/13.8KV TRANSFORMER CKT 1
13G	03ALL	'FROM->TO'	'SMOKYHL6 230.00 - SUMMIT 230KV CKT 1'	319	319	0.09038	106.0862	'AXTELL (AXTELL T1) 345/115/13.8KV TRANSFORMER CKT 1
13G	03ALL	'FROM->TO'	'SMOKYHL6 230.00 - SUMMIT 230KV CKT 1'	319	319	0.10395	106.0862	'AXTELL (AXTELL T1) 345/115/13.8KV TRANSFORMER CKT 1
13G	03ALL	'FROM->TO'	'SMOKYHL6 230.00 - SUMMIT 230KV CKT 1'	319	319	0.12308	106.0862	'AXTELL (AXTELL T1) 345/115/13.8KV TRANSFORMER CKT 1
13G	03ALL	'FROM->TO'	'SMOKYHL6 230.00 - SUMMIT 230KV CKT 1'	319	319	0.12308	106.0862	'AXTELL (AXTELL T1) 345/115/13.8KV TRANSFORMER CKT 1
13G	03ALL	'FROM->TO'	'SMOKYHL6 230.00 - SUMMIT 230KV CKT 1'	319	319	0.07863	106.0862	'AXTELL (AXTELL T1) 345/115/13.8KV TRANSFORMER CKT 1
13G	03ALL	'FROM->TO'	'SMOKYHL6 230.00 - SUMMIT 230KV CKT 1'	319	319	0.10023	106.0862	'AXTELL (AXTELL T1) 345/115/13.8KV TRANSFORMER CKT 1
13G	03ALL	'FROM->TO'	'SMOKYHL6 230.00 - SUMMIT 230KV CKT 1'	319	319	0.11573	106.0862	'AXTELL (AXTELL T1) 345/115/13.8KV TRANSFORMER CKT 1
13G	03ALL	'FROM->TO'	'SMOKYHL6 230.00 - SUMMIT 230KV CKT 1'	319	319	0.11573	106.0862	'AXTELL (AXTELL T1) 345/115/13.8KV TRANSFORMER CKT 1
13G	03ALL	'FROM->TO'	'SMOKYHL6 230.00 - SUMMIT 230KV CKT 1'	319	319	0.627	106.0862	'AXTELL (AXTELL T1) 345/115/13.8KV TRANSFORMER CKT 1
13G	03ALL	'FROM->TO'	'SMOKYHL6 230.00 - SUMMIT 230KV CKT 1'	319	319	0.1002	106.0862	'AXTELL (AXTELL T1) 345/115/13.8KV TRANSFORMER CKT 1
13G	03ALL	'FROM->TO'	'SMOKYHL6 230.00 - SUMMIT 230KV CKT 1'	319	319	0.12826	106.0862	'AXTELL (AXTELL T1) 345/115/13.8KV TRANSFORMER CKT 1
13G	03ALL	'FROM->TO'	'SMOKYHL6 230.00 - SUMMIT 230KV CKT 1'	319	319	0.10304	106.0862	'AXTELL (AXTELL T1) 345/115/13.8KV TRANSFORMER CKT 1
13G	03ALL	'FROM->TO'	'SMOKYHL6 230.00 - SUMMIT 230KV CKT 1'	319	319	0.18649	107.0053	'COOPER - FAIRPORT 345KV CKT 1'
13G	03ALL	'FROM->TO'	'SMOKYHL6 230.00 - SUMMIT 230KV CKT 1'	319	319	0.09056	107.0053	'COOPER - FAIRPORT 345KV CKT 1'
13G	03ALL	'FROM->TO'	'SMOKYHL6 230.00 - SUMMIT 230KV CKT 1'	319	319	0.10418	107.0053	'COOPER - FAIRPORT 345KV CKT 1'
13G	03ALL	'FROM->TO'	'SMOKYHL6 230.00 - SUMMIT 230KV CKT 1'	319	319	0.12332	107.0053	'COOPER - FAIRPORT 345KV CKT 1'
13G	03ALL	'FROM->TO'	'SMOKYHL6 230.00 - SUMMIT 230KV CKT 1'	319	319	0.12332	107.0053	'COOPER - FAIRPORT 345KV CKT 1'
13G	03ALL	'FROM->TO'	'SMOKYHL6 230.00 - SUMMIT 230KV CKT 1'	319	319	0.07867	107.0053	'COOPER - FAIRPORT 345KV CKT 1'
13G	03ALL	'FROM->TO'	'SMOKYHL6 230.00 - SUMMIT 230KV CKT 1'	319	319	0.10116	107.0053	'COOPER - FAIRPORT 345KV CKT 1'
13G	03ALL	'FROM->TO'	'SMOKYHL6 230.00 - SUMMIT 230KV CKT 1'	319	319	0.11625	107.0053	'COOPER - FAIRPORT 345KV CKT 1'
13G	03ALL	'FROM->TO'	'SMOKYHL6 230.00 - SUMMIT 230KV CKT 1'	319	319	0.11625	107.0053	'COOPER - FAIRPORT 345KV CKT 1'
13G	03ALL	'FROM->TO'	'SMOKYHL6 230.00 - SUMMIT 230KV CKT 1'	319	319	0.62652	107.0053	'COOPER - FAIRPORT 345KV CKT 1'
13G	03ALL	'FROM->TO'	'SMOKYHL6 230.00 - SUMMIT 230KV CKT 1'	319	319	0.10119	107.0053	'COOPER - FAIRPORT 345KV CKT 1'
13G	03ALL	'FROM->TO'	'SMOKYHL6 230.00 - SUMMIT 230KV CKT 1'	319	319	0.12854	107.0053	'COOPER - FAIRPORT 345KV CKT 1'
13G	03ALL	'FROM->TO'	'SMOKYHL6 230.00 - SUMMIT 230KV CKT 1'	319	319	0.10379	107.0053	'COOPER - FAIRPORT 345KV CKT 1'
13G	03ALL	'FROM->TO'	'SMOKYHL6 230.00 - SUMMIT 230KV CKT 1'	319	319	0.18647	106.8131	'SPP-2006-001'
13G	03ALL	'FROM->TO'	'SMOKYHL6 230.00 - SUMMIT 230KV CKT 1'	319	319	0.09053	106.8131	'SPP-2006-001'
13G	03ALL	'FROM->TO'	'SMOKYHL6 230.00 - SUMMIT 230KV CKT 1'	319	319	0.10416	106.8131	'SPP-2006-001'
13G	03ALL	'FROM->TO'	'SMOKYHL6 230.00 - SUMMIT 230KV CKT 1'	319	319	0.1233	106.8131	'SPP-2006-001'
13G	03ALL	'FROM->TO'	'SMOKYHL6 230.00 - SUMMIT 230KV CKT 1'	319	319	0.1233	106.8131	'SPP-2006-001'
13G	03ALL	'FROM->TO'	'SMOKYHL6 230.00 - SUMMIT 230KV CKT 1'	319	319	0.07865	106.8131	'SPP-2006-001'
13G	03ALL	'FROM->TO'	'SMOKYHL6 230.00 - SUMMIT 230KV CKT 1'	319	319	0.10114	106.8131	'SPP-2006-001'
13G	03ALL	'FROM->TO'	'SMOKYHL6 230.00 - SUMMIT 230KV CKT 1'	319	319	0.11623	106.8131	'SPP-2006-001'
13G	03ALL	'FROM->TO'	'SMOKYHL6 230.00 - SUMMIT 230KV CKT 1'	319	319	0.11623	106.8131	'SPP-2006-001'
13G	03ALL	'FROM->TO'	'SMOKYHL6 230.00 - SUMMIT 230KV CKT 1'	319	319	0.62649	106.8131	'SPP-2006-001'
13G	03ALL	'FROM->TO'	'SMOKYHL6 230.00 - SUMMIT 230KV CKT 1'	319	319	0.10117	106.8131	'SPP-2006-001'
13G	03ALL	'FROM->TO'	'SMOKYHL6 230.00 - SUMMIT 230KV CKT 1'	319	319	0.12852	106.8131	'SPP-2006-001'
13G	03ALL	'FROM->TO'	'SMOKYHL6 230.00 - SUMMIT 230KV CKT 1'	319	319	0.10377	106.8131	'SPP-2006-001'
13G	03ALL	'FROM->TO'	'SMOKYHL6 230.00 - SUMMIT 230KV CKT 1'	319	319	0.18637	108.0109	'KCPL-OPGD#06'
13G	03ALL	'FROM->TO'	'SMOKYHL6 230.00 - SUMMIT 230KV CKT 1'	319	319	0.09051	108.0109	'KCPL-OPGD#06'
13G	03ALL	'FROM->TO'	'SMOKYHL6 230.00 - SUMMIT 230KV CKT 1'	319	319	0.10403	108.0109	'KCPL-OPGD#06'
13G	03ALL	'FROM->TO'	'SMOKYHL6 230.00 - SUMMIT 230KV CKT 1'	319	319	0.12313	108.0109	'KCPL-OPGD#06'
13G	03ALL	'FROM->TO'	'SMOKYHL6 230.00 - SUMMIT 230KV CKT 1'	319	319	0.12313	108.0109	'KCPL-OPGD#06'
13G	03ALL	'FROM->TO'	'SMOKYHL6 230.00 - SUMMIT 230KV CKT 1'	319	319	0.07863	108.0109	'KCPL-OPGD#06'
13G	03ALL	'FROM->TO'	'SMOKYHL6 230.00 - SUMMIT 230KV CKT 1'	319	319	0.10087	108.0109	'KCPL-OPGD#06'
13G	03ALL	'FROM->TO'	'SMOKYHL6 230.00 - SUMMIT 230KV CKT 1'	319	319	0.116	108.0109	'KCPL-OPGD#06'
13G	03ALL	'FROM->TO'	'SMOKYHL6 230.00 - SUMMIT 230KV CKT 1'	319	319	0.116	108.0109	'KCPL-OPGD#06'
13G	03ALL	'FROM->TO'	'SMOKYHL6 230.00 - SUMMIT 230KV CKT 1'	319	319	0.62682	108.0109	'KCPL-OPGD#06'

SEASON	GROUP	DIRECTION	MONITORED ELEMENT	RATE A (MVA)	RATE B (MVA)	TDF	TC%LOADING (%MVA)	CONTINGENCY NAME
13G	03ALL	'FROM->TO'	'SMOKYHL6 230.00 - SUMMIT 230KV CKT 1'	319	319	0.10089	108.0109	'KCPL-OPGD#06'
13G	03ALL	'FROM->TO'	'SMOKYHL6 230.00 - SUMMIT 230KV CKT 1'	319	319	0.12832	108.0109	'KCPL-OPGD#06'
13G	03ALL	'FROM->TO'	'SMOKYHL6 230.00 - SUMMIT 230KV CKT 1'	319	319	0.10352	108.0109	'KCPL-OPGD#06'
13G	03ALL	'FROM->TO'	'SMOKYHL6 230.00 - SUMMIT 230KV CKT 1'	319	319	0.18558	109.5995	'KCPL-OPGD#07'
13G	03ALL	'FROM->TO'	'SMOKYHL6 230.00 - SUMMIT 230KV CKT 1'	319	319	0.0896	109.5995	'KCPL-OPGD#07'
13G	03ALL	'FROM->TO'	'SMOKYHL6 230.00 - SUMMIT 230KV CKT 1'	319	319	0.10339	109.5995	'KCPL-OPGD#07'
13G	03ALL	'FROM->TO'	'SMOKYHL6 230.00 - SUMMIT 230KV CKT 1'	319	319	0.12254	109.5995	'KCPL-OPGD#07'
13G	03ALL	'FROM->TO'	'SMOKYHL6 230.00 - SUMMIT 230KV CKT 1'	319	319	0.12254	109.5995	'KCPL-OPGD#07'
13G	03ALL	'FROM->TO'	'SMOKYHL6 230.00 - SUMMIT 230KV CKT 1'	319	319	0.0778	109.5995	'KCPL-OPGD#07'
13G	03ALL	'FROM->TO'	'SMOKYHL6 230.00 - SUMMIT 230KV CKT 1'	319	319	0.10055	109.5995	'KCPL-OPGD#07'
13G	03ALL	'FROM->TO'	'SMOKYHL6 230.00 - SUMMIT 230KV CKT 1'	319	319	0.11557	109.5995	'KCPL-OPGD#07'
13G	03ALL	'FROM->TO'	'SMOKYHL6 230.00 - SUMMIT 230KV CKT 1'	319	319	0.11557	109.5995	'KCPL-OPGD#07'
13G	03ALL	'FROM->TO'	'SMOKYHL6 230.00 - SUMMIT 230KV CKT 1'	319	319	0.62504	109.5995	'KCPL-OPGD#07'
13G	03ALL	'FROM->TO'	'SMOKYHL6 230.00 - SUMMIT 230KV CKT 1'	319	319	0.10058	109.5995	'KCPL-OPGD#07'
13G	03ALL	'FROM->TO'	'SMOKYHL6 230.00 - SUMMIT 230KV CKT 1'	319	319	0.12781	109.5995	'KCPL-OPGD#07'
13G	03ALL	'FROM->TO'	'SMOKYHL6 230.00 - SUMMIT 230KV CKT 1'	319	319	0.10317	109.5995	'KCPL-OPGD#07'
13G	03ALL	'FROM->TO'	'SMOKYHL6 230.00 - SUMMIT 230KV CKT 1'	319	319	0.18649	106.8759	'KCPL-OL166-1'
13G	03ALL	'FROM->TO'	'SMOKYHL6 230.00 - SUMMIT 230KV CKT 1'	319	319	0.09055	106.8759	'KCPL-OL166-1'
13G	03ALL	'FROM->TO'	'SMOKYHL6 230.00 - SUMMIT 230KV CKT 1'	319	319	0.10418	106.8759	'KCPL-OL166-1'
13G	03ALL	'FROM->TO'	'SMOKYHL6 230.00 - SUMMIT 230KV CKT 1'	319	319	0.12332	106.8759	'KCPL-OL166-1'
13G	03ALL	'FROM->TO'	'SMOKYHL6 230.00 - SUMMIT 230KV CKT 1'	319	319	0.12332	106.8759	'KCPL-OL166-1'
13G	03ALL	'FROM->TO'	'SMOKYHL6 230.00 - SUMMIT 230KV CKT 1'	319	319	0.07867	106.8759	'KCPL-OL166-1'
13G	03ALL	'FROM->TO'	'SMOKYHL6 230.00 - SUMMIT 230KV CKT 1'	319	319	0.10117	106.8759	'KCPL-OL166-1'
13G	03ALL	'FROM->TO'	'SMOKYHL6 230.00 - SUMMIT 230KV CKT 1'	319	319	0.11625	106.8759	'KCPL-OL166-1'
13G	03ALL	'FROM->TO'	'SMOKYHL6 230.00 - SUMMIT 230KV CKT 1'	319	319	0.11625	106.8759	'KCPL-OL166-1'
13G	03ALL	'FROM->TO'	'SMOKYHL6 230.00 - SUMMIT 230KV CKT 1'	319	319	0.62651	106.8759	'KCPL-OL166-1'
13G	03ALL	'FROM->TO'	'SMOKYHL6 230.00 - SUMMIT 230KV CKT 1'	319	319	0.10119	106.8759	'KCPL-OL166-1'
13G	03ALL	'FROM->TO'	'SMOKYHL6 230.00 - SUMMIT 230KV CKT 1'	319	319	0.12854	106.8759	'KCPL-OL166-1'
13G	03ALL	'FROM->TO'	'SMOKYHL6 230.00 - SUMMIT 230KV CKT 1'	319	319	0.10379	106.8759	'KCPL-OL166-1'
13G	03ALL	'FROM->TO'	'SMOKYHL6 230.00 - SUMMIT 230KV CKT 1'	319	319	0.18897	106.8965	'MIDW-CATB05'
13G	03ALL	'FROM->TO'	'SMOKYHL6 230.00 - SUMMIT 230KV CKT 1'	319	319	0.09988	106.8965	'MIDW-CATB05'
13G	03ALL	'FROM->TO'	'SMOKYHL6 230.00 - SUMMIT 230KV CKT 1'	319	319	0.11025	106.8965	'MIDW-CATB05'
13G	03ALL	'FROM->TO'	'SMOKYHL6 230.00 - SUMMIT 230KV CKT 1'	319	319	0.12646	106.8965	'MIDW-CATB05'
13G	03ALL	'FROM->TO'	'SMOKYHL6 230.00 - SUMMIT 230KV CKT 1'	319	319	0.12646	106.8965	'MIDW-CATB05'
13G	03ALL	'FROM->TO'	'SMOKYHL6 230.00 - SUMMIT 230KV CKT 1'	319	319	0.08983	106.8965	'MIDW-CATB05'
13G	03ALL	'FROM->TO'	'SMOKYHL6 230.00 - SUMMIT 230KV CKT 1'	319	319	0.10349	106.8965	'MIDW-CATB05'
13G	03ALL	'FROM->TO'	'SMOKYHL6 230.00 - SUMMIT 230KV CKT 1'	319	319	0.11858	106.8965	'MIDW-CATB05'
13G	03ALL	'FROM->TO'	'SMOKYHL6 230.00 - SUMMIT 230KV CKT 1'	319	319	0.11858	106.8965	'MIDW-CATB05'
13G	03ALL	'FROM->TO'	'SMOKYHL6 230.00 - SUMMIT 230KV CKT 1'	319	319	0.62641	106.8965	'MIDW-CATB05'
13G	03ALL	'FROM->TO'	'SMOKYHL6 230.00 - SUMMIT 230KV CKT 1'	319	319	0.03454	106.8965	'MIDW-CATB05'
13G	03ALL	'FROM->TO'	'SMOKYHL6 230.00 - SUMMIT 230KV CKT 1'	319	319	0.10338	106.8965	'MIDW-CATB05'
13G	03ALL	'FROM->TO'	'SMOKYHL6 230.00 - SUMMIT 230KV CKT 1'	319	319	0.13115	106.8965	'MIDW-CATB05'
13G	03ALL	'FROM->TO'	'SMOKYHL6 230.00 - SUMMIT 230KV CKT 1'	319	319	0.10584	106.8965	'MIDW-CATB05'
13G	03ALL	'TO->FROM'	'CLEARWATER - MILAN TAP 138KV CKT 1'	110	110	0.04179	132.0173	'MIDW-CATB05'
13G	03ALL	'TO->FROM'	'CLEARWATER - MILAN TAP 138KV CKT 1'	110	110	0.08012	132.0173	'MIDW-CATB05'
13G	03ALL	'TO->FROM'	'CLEARWATER - MILAN TAP 138KV CKT 1'	110	110	0.12095	132.0173	'MIDW-CATB05'
13G	03ALL	'TO->FROM'	'CLEARWATER - MILAN TAP 138KV CKT 1'	110	110	0.05594	132.0173	'MIDW-CATB05'
13G	03ALL	'TO->FROM'	'CLEARWATER - MILAN TAP 138KV CKT 1'	110	110	0.05594	132.0173	'MIDW-CATB05'
13G	03ALL	'TO->FROM'	'CLEARWATER - MILAN TAP 138KV CKT 1'	110	110	0.23139	132.0173	'MIDW-CATB05'
13G	03ALL	'TO->FROM'	'CLEARWATER - MILAN TAP 138KV CKT 1'	110	110	0.0439	132.0173	'MIDW-CATB05'
13G	03ALL	'TO->FROM'	'CLEARWATER - MILAN TAP 138KV CKT 1'	110	110	0.04561	132.0173	'MIDW-CATB05'
13G	03ALL	'TO->FROM'	'CLEARWATER - MILAN TAP 138KV CKT 1'	110	110	0.04561	132.0173	'MIDW-CATB05'
13G	03ALL	'TO->FROM'	'CLEARWATER - MILAN TAP 138KV CKT 1'	110	110	0.55362	132.0173	'MIDW-CATB05'
13G	03ALL	'TO->FROM'	'CLEARWATER - MILAN TAP 138KV CKT 1'	110	110	0.04314	132.0173	'MIDW-CATB05'
13G	03ALL	'TO->FROM'	'CLEARWATER - MILAN TAP 138KV CKT 1'	110	110	0.04932	132.0173	'MIDW-CATB05'
13G	03ALL	'TO->FROM'	'CLEARWATER - MILAN TAP 138KV CKT 1'	110	110	0.04184	132.0173	'MIDW-CATB05'
13G	03ALL	'TO->FROM'	'GREENSBURG - SSTARTP3 115.00 115KV CKT 1	120.7	129.5	0.17148	103.1858	'MIDW-CATB05'
13G	03ALL	'TO->FROM'	'GREENSBURG - SSTARTP3 115.00 115KV CKT 1	120.7	129.5	0.04108	103.1858	'MIDW-CATB05'
13G	03ALL	'TO->FROM'	'GREENSBURG - SSTARTP3 115.00 115KV CKT 1	120.7	129.5	0.04108	103.1858	'MIDW-CATB05'
13G	03ALL	'TO->FROM'	'GREENSBURG - SSTARTP3 115.00 115KV CKT 1	120.7	129.5	0.38884	103.1858	'MIDW-CATB05'
13G	03ALL	'TO->FROM'	'GREENSBURG - SSTARTP3 115.00 115KV CKT 1	120.7	129.5	0.03109	103.1858	'MIDW-CATB05'
13G	03ALL	'TO->FROM'	'GREENSBURG - SSTARTP3 115.00 115KV CKT 1	120.7	129.5	0.03109	103.1858	'MIDW-CATB05'
13G	03ALL	'TO->FROM'	'GREENSBURG - SSTARTP3 115.00 115KV CKT 1	120.7	129.5	0.03367	103.1858	'MIDW-CATB05'
13G	03ALL	'FROM->TO'	'HARPER - MILAN TAP 138KV CKT 1'	95.6	95.6	0.04179	159.2323	'MIDW-CATB05'

SEASON	GROUP	DIRECTION	MONITORED ELEMENT	RATE A (MVA)	RATE B (MVA)	TDF	TC%LOADING (%MVA)	CONTINGENCY NAME
13G	03ALL	'FROM->TO'	'HARPER - MILAN TAP 138KV CKT 1'	95.6	95.6	0.08012	159.2323	'MIDW-CATB05'
13G	03ALL	'FROM->TO'	'HARPER - MILAN TAP 138KV CKT 1'	95.6	95.6	0.12095	159.2323	'MIDW-CATB05'
13G	03ALL	'FROM->TO'	'HARPER - MILAN TAP 138KV CKT 1'	95.6	95.6	0.05594	159.2323	'MIDW-CATB05'
13G	03ALL	'FROM->TO'	'HARPER - MILAN TAP 138KV CKT 1'	95.6	95.6	0.05594	159.2323	'MIDW-CATB05'
13G	03ALL	'FROM->TO'	'HARPER - MILAN TAP 138KV CKT 1'	95.6	95.6	0.23139	159.2323	'MIDW-CATB05'
13G	03ALL	'FROM->TO'	'HARPER - MILAN TAP 138KV CKT 1'	95.6	95.6	0.0439	159.2323	'MIDW-CATB05'
13G	03ALL	'FROM->TO'	'HARPER - MILAN TAP 138KV CKT 1'	95.6	95.6	0.04561	159.2323	'MIDW-CATB05'
13G	03ALL	'FROM->TO'	'HARPER - MILAN TAP 138KV CKT 1'	95.6	95.6	0.04561	159.2323	'MIDW-CATB05'
13G	03ALL	'FROM->TO'	'HARPER - MILAN TAP 138KV CKT 1'	95.6	95.6	0.55362	159.2323	'MIDW-CATB05'
13G	03ALL	'FROM->TO'	'HARPER - MILAN TAP 138KV CKT 1'	95.6	95.6	0.04314	159.2323	'MIDW-CATB05'
13G	03ALL	'FROM->TO'	'HARPER - MILAN TAP 138KV CKT 1'	95.6	95.6	0.04932	159.2323	'MIDW-CATB05'
13G	03ALL	'FROM->TO'	'HARPER - MILAN TAP 138KV CKT 1'	95.6	95.6	0.04184	159.2323	'MIDW-CATB05'
13G	03ALL	'FROM->TO'	'SMOKYHL6 230.00 - SUMMIT 230KV CKT 1'	319	319	0.18647	106.8131	'LN-FAIRPORT'
13G	03ALL	'FROM->TO'	'SMOKYHL6 230.00 - SUMMIT 230KV CKT 1'	319	319	0.09053	106.8131	'LN-FAIRPORT'
13G	03ALL	'FROM->TO'	'SMOKYHL6 230.00 - SUMMIT 230KV CKT 1'	319	319	0.10416	106.8131	'LN-FAIRPORT'
13G	03ALL	'FROM->TO'	'SMOKYHL6 230.00 - SUMMIT 230KV CKT 1'	319	319	0.1233	106.8131	'LN-FAIRPORT'
13G	03ALL	'FROM->TO'	'SMOKYHL6 230.00 - SUMMIT 230KV CKT 1'	319	319	0.1233	106.8131	'LN-FAIRPORT'
13G	03ALL	'FROM->TO'	'SMOKYHL6 230.00 - SUMMIT 230KV CKT 1'	319	319	0.07865	106.8131	'LN-FAIRPORT'
13G	03ALL	'FROM->TO'	'SMOKYHL6 230.00 - SUMMIT 230KV CKT 1'	319	319	0.10114	106.8131	'LN-FAIRPORT'
13G	03ALL	'FROM->TO'	'SMOKYHL6 230.00 - SUMMIT 230KV CKT 1'	319	319	0.11623	106.8131	'LN-FAIRPORT'
13G	03ALL	'FROM->TO'	'SMOKYHL6 230.00 - SUMMIT 230KV CKT 1'	319	319	0.11623	106.8131	'LN-FAIRPORT'
13G	03ALL	'FROM->TO'	'SMOKYHL6 230.00 - SUMMIT 230KV CKT 1'	319	319	0.62649	106.8131	'LN-FAIRPORT'
13G	03ALL	'FROM->TO'	'SMOKYHL6 230.00 - SUMMIT 230KV CKT 1'	319	319	0.10117	106.8131	'LN-FAIRPORT'
13G	03ALL	'FROM->TO'	'SMOKYHL6 230.00 - SUMMIT 230KV CKT 1'	319	319	0.12852	106.8131	'LN-FAIRPORT'
13G	03ALL	'FROM->TO'	'SMOKYHL6 230.00 - SUMMIT 230KV CKT 1'	319	319	0.10377	106.8131	'LN-FAIRPORT'
13G	03ALL	'FROM->TO'	'SMOKYHL6 230.00 - SUMMIT 230KV CKT 1'	319	319	0.18549	105.2293	'NC1_GEN-NEBRASKA CITY 1'
13G	03ALL	'FROM->TO'	'SMOKYHL6 230.00 - SUMMIT 230KV CKT 1'	319	319	0.08979	105.2293	'NC1_GEN-NEBRASKA CITY 1'
13G	03ALL	'FROM->TO'	'SMOKYHL6 230.00 - SUMMIT 230KV CKT 1'	319	319	0.10326	105.2293	'NC1_GEN-NEBRASKA CITY 1'
13G	03ALL	'FROM->TO'	'SMOKYHL6 230.00 - SUMMIT 230KV CKT 1'	319	319	0.12225	105.2293	'NC1_GEN-NEBRASKA CITY 1'
13G	03ALL	'FROM->TO'	'SMOKYHL6 230.00 - SUMMIT 230KV CKT 1'	319	319	0.12225	105.2293	'NC1_GEN-NEBRASKA CITY 1'
13G	03ALL	'FROM->TO'	'SMOKYHL6 230.00 - SUMMIT 230KV CKT 1'	319	319	0.07803	105.2293	'NC1_GEN-NEBRASKA CITY 1'
13G	03ALL	'FROM->TO'	'SMOKYHL6 230.00 - SUMMIT 230KV CKT 1'	319	319	0.09991	105.2293	'NC1_GEN-NEBRASKA CITY 1'
13G	03ALL	'FROM->TO'	'SMOKYHL6 230.00 - SUMMIT 230KV CKT 1'	319	319	0.11509	105.2293	'NC1_GEN-NEBRASKA CITY 1'
13G	03ALL	'FROM->TO'	'SMOKYHL6 230.00 - SUMMIT 230KV CKT 1'	319	319	0.11509	105.2293	'NC1_GEN-NEBRASKA CITY 1'
13G	03ALL	'FROM->TO'	'SMOKYHL6 230.00 - SUMMIT 230KV CKT 1'	319	319	0.62637	105.2293	'NC1_GEN-NEBRASKA CITY 1'
13G	03ALL	'FROM->TO'	'SMOKYHL6 230.00 - SUMMIT 230KV CKT 1'	319	319	0.09991	105.2293	'NC1_GEN-NEBRASKA CITY 1'
13G	03ALL	'FROM->TO'	'SMOKYHL6 230.00 - SUMMIT 230KV CKT 1'	319	319	0.1274	105.2293	'NC1_GEN-NEBRASKA CITY 1'
13G	03ALL	'FROM->TO'	'SMOKYHL6 230.00 - SUMMIT 230KV CKT 1'	319	319	0.10261	105.2293	'NC1_GEN-NEBRASKA CITY 1'
13G	03ALL	'TO->FROM'	'CLEARWATER - MILAN TAP 138KV CKT 1'	110	110	0.03559	122.895	'NC1_GEN-NEBRASKA CITY 1'
13G	03ALL	'TO->FROM'	'CLEARWATER - MILAN TAP 138KV CKT 1'	110	110	0.06218	122.895	'NC1_GEN-NEBRASKA CITY 1'
13G	03ALL	'TO->FROM'	'CLEARWATER - MILAN TAP 138KV CKT 1'	110	110	0.10851	122.895	'NC1_GEN-NEBRASKA CITY 1'
13G	03ALL	'TO->FROM'	'CLEARWATER - MILAN TAP 138KV CKT 1'	110	110	0.04844	122.895	'NC1_GEN-NEBRASKA CITY 1'
13G	03ALL	'TO->FROM'	'CLEARWATER - MILAN TAP 138KV CKT 1'	110	110	0.04844	122.895	'NC1_GEN-NEBRASKA CITY 1'
13G	03ALL	'TO->FROM'	'CLEARWATER - MILAN TAP 138KV CKT 1'	110	110	0.2104	122.895	'NC1_GEN-NEBRASKA CITY 1'
13G	03ALL	'TO->FROM'	'CLEARWATER - MILAN TAP 138KV CKT 1'	110	110	0.03753	122.895	'NC1_GEN-NEBRASKA CITY 1'
13G	03ALL	'TO->FROM'	'CLEARWATER - MILAN TAP 138KV CKT 1'	110	110	0.0394	122.895	'NC1_GEN-NEBRASKA CITY 1'
13G	03ALL	'TO->FROM'	'CLEARWATER - MILAN TAP 138KV CKT 1'	110	110	0.0394	122.895	'NC1_GEN-NEBRASKA CITY 1'
13G	03ALL	'TO->FROM'	'CLEARWATER - MILAN TAP 138KV CKT 1'	110	110	0.52726	122.895	'NC1_GEN-NEBRASKA CITY 1'
13G	03ALL	'TO->FROM'	'CLEARWATER - MILAN TAP 138KV CKT 1'	110	110	0.03696	122.895	'NC1_GEN-NEBRASKA CITY 1'
13G	03ALL	'TO->FROM'	'CLEARWATER - MILAN TAP 138KV CKT 1'	110	110	0.04265	122.895	'NC1_GEN-NEBRASKA CITY 1'
13G	03ALL	'TO->FROM'	'CLEARWATER - MILAN TAP 138KV CKT 1'	110	110	0.03608	122.895	'NC1_GEN-NEBRASKA CITY 1'
13G	03ALL	'FROM->TO'	'HARPER - MILAN TAP 138KV CKT 1'	95.6	95.6	0.03559	148.7473	'NC1_GEN-NEBRASKA CITY 1'
13G	03ALL	'FROM->TO'	'HARPER - MILAN TAP 138KV CKT 1'	95.6	95.6	0.06218	148.7473	'NC1_GEN-NEBRASKA CITY 1'
13G	03ALL	'FROM->TO'	'HARPER - MILAN TAP 138KV CKT 1'	95.6	95.6	0.10851	148.7473	'NC1_GEN-NEBRASKA CITY 1'
13G	03ALL	'FROM->TO'	'HARPER - MILAN TAP 138KV CKT 1'	95.6	95.6	0.04844	148.7473	'NC1_GEN-NEBRASKA CITY 1'
13G	03ALL	'FROM->TO'	'HARPER - MILAN TAP 138KV CKT 1'	95.6	95.6	0.04844	148.7473	'NC1_GEN-NEBRASKA CITY 1'
13G	03ALL	'FROM->TO'	'HARPER - MILAN TAP 138KV CKT 1'	95.6	95.6	0.2104	148.7473	'NC1_GEN-NEBRASKA CITY 1'
13G	03ALL	'FROM->TO'	'HARPER - MILAN TAP 138KV CKT 1'	95.6	95.6	0.03753	148.7473	'NC1_GEN-NEBRASKA CITY 1'
13G	03ALL	'FROM->TO'	'HARPER - MILAN TAP 138KV CKT 1'	95.6	95.6	0.0394	148.7473	'NC1_GEN-NEBRASKA CITY 1'
13G	03ALL	'FROM->TO'	'HARPER - MILAN TAP 138KV CKT 1'	95.6	95.6	0.0394	148.7473	'NC1_GEN-NEBRASKA CITY 1'
13G	03ALL	'FROM->TO'	'HARPER - MILAN TAP 138KV CKT 1'	95.6	95.6	0.52726	148.7473	'NC1_GEN-NEBRASKA CITY 1'
13G	03ALL	'FROM->TO'	'HARPER - MILAN TAP 138KV CKT 1'	95.6	95.6	0.03696	148.7473	'NC1_GEN-NEBRASKA CITY 1'
13G	03ALL	'FROM->TO'	'HARPER - MILAN TAP 138KV CKT 1'	95.6	95.6	0.04265	148.7473	'NC1_GEN-NEBRASKA CITY 1'
13G	03ALL	'FROM->TO'	'HARPER - MILAN TAP 138KV CKT 1'	95.6	95.6	0.03608	148.7473	'NC1_GEN-NEBRASKA CITY 1'

SEASON	GROUP	DIRECTION	MONITORED ELEMENT	RATE A (MVA)	RATE B (MVA)	TDF	TC%LOADING (%MVA)	CONTINGENCY NAME
13G	03ALL	'FROM->TO'	'SMOKYHL6 230.00 - SUMMIT 230KV CKT 1'	319	319	0.18636	108.4877	'SPP-SWPS-02A'
13G	03ALL	'FROM->TO'	'SMOKYHL6 230.00 - SUMMIT 230KV CKT 1'	319	319	0.09089	108.4877	'SPP-SWPS-02A'
13G	03ALL	'FROM->TO'	'SMOKYHL6 230.00 - SUMMIT 230KV CKT 1'	319	319	0.10512	108.4877	'SPP-SWPS-02A'
13G	03ALL	'FROM->TO'	'SMOKYHL6 230.00 - SUMMIT 230KV CKT 1'	319	319	0.12429	108.4877	'SPP-SWPS-02A'
13G	03ALL	'FROM->TO'	'SMOKYHL6 230.00 - SUMMIT 230KV CKT 1'	319	319	0.12429	108.4877	'SPP-SWPS-02A'
13G	03ALL	'FROM->TO'	'SMOKYHL6 230.00 - SUMMIT 230KV CKT 1'	319	319	0.07917	108.4877	'SPP-SWPS-02A'
13G	03ALL	'FROM->TO'	'SMOKYHL6 230.00 - SUMMIT 230KV CKT 1'	319	319	0.10305	108.4877	'SPP-SWPS-02A'
13G	03ALL	'FROM->TO'	'SMOKYHL6 230.00 - SUMMIT 230KV CKT 1'	319	319	0.11808	108.4877	'SPP-SWPS-02A'
13G	03ALL	'FROM->TO'	'SMOKYHL6 230.00 - SUMMIT 230KV CKT 1'	319	319	0.11808	108.4877	'SPP-SWPS-02A'
13G	03ALL	'FROM->TO'	'SMOKYHL6 230.00 - SUMMIT 230KV CKT 1'	319	319	0.62608	108.4877	'SPP-SWPS-02A'
13G	03ALL	'FROM->TO'	'SMOKYHL6 230.00 - SUMMIT 230KV CKT 1'	319	319	0.10297	108.4877	'SPP-SWPS-02A'
13G	03ALL	'FROM->TO'	'SMOKYHL6 230.00 - SUMMIT 230KV CKT 1'	319	319	0.12965	108.4877	'SPP-SWPS-02A'
13G	03ALL	'FROM->TO'	'SMOKYHL6 230.00 - SUMMIT 230KV CKT 1'	319	319	0.10637	108.4877	'SPP-SWPS-02A'
13G	03ALL	'TO->FROM'	'CLEARWATER - MILAN TAP 138KV CKT 1'	110	110	0.03592	126.256	'SPP-SWPS-02A'
13G	03ALL	'TO->FROM'	'CLEARWATER - MILAN TAP 138KV CKT 1'	110	110	0.06259	126.256	'SPP-SWPS-02A'
13G	03ALL	'TO->FROM'	'CLEARWATER - MILAN TAP 138KV CKT 1'	110	110	0.10922	126.256	'SPP-SWPS-02A'
13G	03ALL	'TO->FROM'	'CLEARWATER - MILAN TAP 138KV CKT 1'	110	110	0.04922	126.256	'SPP-SWPS-02A'
13G	03ALL	'TO->FROM'	'CLEARWATER - MILAN TAP 138KV CKT 1'	110	110	0.04922	126.256	'SPP-SWPS-02A'
13G	03ALL	'TO->FROM'	'CLEARWATER - MILAN TAP 138KV CKT 1'	110	110	0.21083	126.256	'SPP-SWPS-02A'
13G	03ALL	'TO->FROM'	'CLEARWATER - MILAN TAP 138KV CKT 1'	110	110	0.03873	126.256	'SPP-SWPS-02A'
13G	03ALL	'TO->FROM'	'CLEARWATER - MILAN TAP 138KV CKT 1'	110	110	0.04053	126.256	'SPP-SWPS-02A'
13G	03ALL	'TO->FROM'	'CLEARWATER - MILAN TAP 138KV CKT 1'	110	110	0.04053	126.256	'SPP-SWPS-02A'
13G	03ALL	'TO->FROM'	'CLEARWATER - MILAN TAP 138KV CKT 1'	110	110	0.52705	126.256	'SPP-SWPS-02A'
13G	03ALL	'TO->FROM'	'CLEARWATER - MILAN TAP 138KV CKT 1'	110	110	0.03813	126.256	'SPP-SWPS-02A'
13G	03ALL	'TO->FROM'	'CLEARWATER - MILAN TAP 138KV CKT 1'	110	110	0.04351	126.256	'SPP-SWPS-02A'
13G	03ALL	'TO->FROM'	'CLEARWATER - MILAN TAP 138KV CKT 1'	110	110	0.03751	126.256	'SPP-SWPS-02A'
13G	03ALL	'FROM->TO'	'GREENSBURG - SUN CITY 115KV CKT 1'	120.7	129.5	0.17813	102.3377	'SPP-SWPS-02A'
13G	03ALL	'FROM->TO'	'GREENSBURG - SUN CITY 115KV CKT 1'	120.7	129.5	0.04538	102.3377	'SPP-SWPS-02A'
13G	03ALL	'FROM->TO'	'GREENSBURG - SUN CITY 115KV CKT 1'	120.7	129.5	0.04538	102.3377	'SPP-SWPS-02A'
13G	03ALL	'FROM->TO'	'GREENSBURG - SUN CITY 115KV CKT 1'	120.7	129.5	0.3994	102.3377	'SPP-SWPS-02A'
13G	03ALL	'FROM->TO'	'GREENSBURG - SUN CITY 115KV CKT 1'	120.7	129.5	0.03091	102.3377	'SPP-SWPS-02A'
13G	03ALL	'FROM->TO'	'GREENSBURG - SUN CITY 115KV CKT 1'	120.7	129.5	0.03508	102.3377	'SPP-SWPS-02A'
13G	03ALL	'FROM->TO'	'GREENSBURG - SUN CITY 115KV CKT 1'	120.7	129.5	0.03508	102.3377	'SPP-SWPS-02A'
13G	03ALL	'FROM->TO'	'GREENSBURG - SUN CITY 115KV CKT 1'	120.7	129.5	0.03095	102.3377	'SPP-SWPS-02A'
13G	03ALL	'FROM->TO'	'GREENSBURG - SUN CITY 115KV CKT 1'	120.7	129.5	0.03763	102.3377	'SPP-SWPS-02A'
13G	03ALL	'FROM->TO'	'GREENSBURG - SUN CITY 115KV CKT 1'	120.7	129.5	0.03247	102.3377	'SPP-SWPS-02A'
13G	03ALL	'TO->FROM'	'GREENSBURG - SSTARTP3 115.00 115KV CKT 1	120.7	129.5	0.17813	110.1995	'SPP-SWPS-02A'
13G	03ALL	'TO->FROM'	'GREENSBURG - SSTARTP3 115.00 115KV CKT 1	120.7	129.5	0.04538	110.1995	'SPP-SWPS-02A'
13G	03ALL	'TO->FROM'	'GREENSBURG - SSTARTP3 115.00 115KV CKT 1	120.7	129.5	0.04538	110.1995	'SPP-SWPS-02A'
13G	03ALL	'TO->FROM'	'GREENSBURG - SSTARTP3 115.00 115KV CKT 1	120.7	129.5	0.3994	110.1995	'SPP-SWPS-02A'
13G	03ALL	'TO->FROM'	'GREENSBURG - SSTARTP3 115.00 115KV CKT 1	120.7	129.5	0.03091	110.1995	'SPP-SWPS-02A'
13G	03ALL	'TO->FROM'	'GREENSBURG - SSTARTP3 115.00 115KV CKT 1	120.7	129.5	0.03508	110.1995	'SPP-SWPS-02A'
13G	03ALL	'TO->FROM'	'GREENSBURG - SSTARTP3 115.00 115KV CKT 1	120.7	129.5	0.03508	110.1995	'SPP-SWPS-02A'
13G	03ALL	'TO->FROM'	'GREENSBURG - SSTARTP3 115.00 115KV CKT 1	120.7	129.5	0.03095	110.1995	'SPP-SWPS-02A'
13G	03ALL	'TO->FROM'	'GREENSBURG - SSTARTP3 115.00 115KV CKT 1	120.7	129.5	0.03763	110.1995	'SPP-SWPS-02A'
13G	03ALL	'TO->FROM'	'GREENSBURG - SSTARTP3 115.00 115KV CKT 1	120.7	129.5	0.03247	110.1995	'SPP-SWPS-02A'
13G	03ALL	'FROM->TO'	'SMOKYHL6 230.00 - SUMMIT 230KV CKT 1'	319	319	0.18638	110.0408	'SPP-SWPS-03'
13G	03ALL	'FROM->TO'	'SMOKYHL6 230.00 - SUMMIT 230KV CKT 1'	319	319	0.09092	110.0408	'SPP-SWPS-03'
13G	03ALL	'FROM->TO'	'SMOKYHL6 230.00 - SUMMIT 230KV CKT 1'	319	319	0.10516	110.0408	'SPP-SWPS-03'
13G	03ALL	'FROM->TO'	'SMOKYHL6 230.00 - SUMMIT 230KV CKT 1'	319	319	0.12434	110.0408	'SPP-SWPS-03'
13G	03ALL	'FROM->TO'	'SMOKYHL6 230.00 - SUMMIT 230KV CKT 1'	319	319	0.12434	110.0408	'SPP-SWPS-03'
13G	03ALL	'FROM->TO'	'SMOKYHL6 230.00 - SUMMIT 230KV CKT 1'	319	319	0.07919	110.0408	'SPP-SWPS-03'
13G	03ALL	'FROM->TO'	'SMOKYHL6 230.00 - SUMMIT 230KV CKT 1'	319	319	0.10312	110.0408	'SPP-SWPS-03'
13G	03ALL	'FROM->TO'	'SMOKYHL6 230.00 - SUMMIT 230KV CKT 1'	319	319	0.11815	110.0408	'SPP-SWPS-03'
13G	03ALL	'FROM->TO'	'SMOKYHL6 230.00 - SUMMIT 230KV CKT 1'	319	319	0.11815	110.0408	'SPP-SWPS-03'
13G	03ALL	'FROM->TO'	'SMOKYHL6 230.00 - SUMMIT 230KV CKT 1'	319	319	0.62607	110.0408	'SPP-SWPS-03'
13G	03ALL	'FROM->TO'	'SMOKYHL6 230.00 - SUMMIT 230KV CKT 1'	319	319	0.10305	110.0408	'SPP-SWPS-03'
13G	03ALL	'FROM->TO'	'SMOKYHL6 230.00 - SUMMIT 230KV CKT 1'	319	319	0.1297	110.0408	'SPP-SWPS-03'
13G	03ALL	'FROM->TO'	'SMOKYHL6 230.00 - SUMMIT 230KV CKT 1'	319	319	0.10646	110.0408	'SPP-SWPS-03'
13G	03ALL	'TO->FROM'	'CLEARWATER - MILAN TAP 138KV CKT 1'	110	110	0.03593	127.8926	'SPP-SWPS-03'
13G	03ALL	'TO->FROM'	'CLEARWATER - MILAN TAP 138KV CKT 1'	110	110	0.0626	127.8926	'SPP-SWPS-03'
13G	03ALL	'TO->FROM'	'CLEARWATER - MILAN TAP 138KV CKT 1'	110	110	0.10924	127.8926	'SPP-SWPS-03'
13G	03ALL	'TO->FROM'	'CLEARWATER - MILAN TAP 138KV CKT 1'	110	110	0.04924	127.8926	'SPP-SWPS-03'
13G	03ALL	'TO->FROM'	'CLEARWATER - MILAN TAP 138KV CKT 1'	110	110	0.04924	127.8926	'SPP-SWPS-03'

SEASON	GROUP	DIRECTION	MONITORED ELEMENT	RATE A (MVA)	RATE B (MVA)	TDF	TC%LOADING (%MVA)	CONTINGENCY NAME
13G	03ALL	'TO->FROM'	'CLEARWATER - MILAN TAP 138KV CKT 1'	110	110	0.21084	127.8926	'SPP-SWPS-03'
13G	03ALL	'TO->FROM'	'CLEARWATER - MILAN TAP 138KV CKT 1'	110	110	0.03876	127.8926	'SPP-SWPS-03'
13G	03ALL	'TO->FROM'	'CLEARWATER - MILAN TAP 138KV CKT 1'	110	110	0.04056	127.8926	'SPP-SWPS-03'
13G	03ALL	'TO->FROM'	'CLEARWATER - MILAN TAP 138KV CKT 1'	110	110	0.04056	127.8926	'SPP-SWPS-03'
13G	03ALL	'TO->FROM'	'CLEARWATER - MILAN TAP 138KV CKT 1'	110	110	0.52704	127.8926	'SPP-SWPS-03'
13G	03ALL	'TO->FROM'	'CLEARWATER - MILAN TAP 138KV CKT 1'	110	110	0.03816	127.8926	'SPP-SWPS-03'
13G	03ALL	'TO->FROM'	'CLEARWATER - MILAN TAP 138KV CKT 1'	110	110	0.04353	127.8926	'SPP-SWPS-03'
13G	03ALL	'TO->FROM'	'CLEARWATER - MILAN TAP 138KV CKT 1'	110	110	0.03755	127.8926	'SPP-SWPS-03'
13G	03ALL	'FROM->TO'	'GREENSBURG - SUN CITY 115KV CKT 1'	120.7	129.5	0.17814	103.9478	'SPP-SWPS-03'
13G	03ALL	'FROM->TO'	'GREENSBURG - SUN CITY 115KV CKT 1'	120.7	129.5	0.0454	103.9478	'SPP-SWPS-03'
13G	03ALL	'FROM->TO'	'GREENSBURG - SUN CITY 115KV CKT 1'	120.7	129.5	0.0454	103.9478	'SPP-SWPS-03'
13G	03ALL	'FROM->TO'	'GREENSBURG - SUN CITY 115KV CKT 1'	120.7	129.5	0.39941	103.9478	'SPP-SWPS-03'
13G	03ALL	'FROM->TO'	'GREENSBURG - SUN CITY 115KV CKT 1'	120.7	129.5	0.03094	103.9478	'SPP-SWPS-03'
13G	03ALL	'FROM->TO'	'GREENSBURG - SUN CITY 115KV CKT 1'	120.7	129.5	0.0351	103.9478	'SPP-SWPS-03'
13G	03ALL	'FROM->TO'	'GREENSBURG - SUN CITY 115KV CKT 1'	120.7	129.5	0.0351	103.9478	'SPP-SWPS-03'
13G	03ALL	'FROM->TO'	'GREENSBURG - SUN CITY 115KV CKT 1'	120.7	129.5	0.03098	103.9478	'SPP-SWPS-03'
13G	03ALL	'FROM->TO'	'GREENSBURG - SUN CITY 115KV CKT 1'	120.7	129.5	0.03765	103.9478	'SPP-SWPS-03'
13G	03ALL	'FROM->TO'	'GREENSBURG - SUN CITY 115KV CKT 1'	120.7	129.5	0.0325	103.9478	'SPP-SWPS-03'
13G	03ALL	'TO->FROM'	'GREENSBURG - SSTARTP3 115.00 115KV CKT 1	120.7	129.5	0.17814	111.8245	'SPP-SWPS-03'
13G	03ALL	'TO->FROM'	'GREENSBURG - SSTARTP3 115.00 115KV CKT 1	120.7	129.5	0.0454	111.8245	'SPP-SWPS-03'
13G	03ALL	'TO->FROM'	'GREENSBURG - SSTARTP3 115.00 115KV CKT 1	120.7	129.5	0.0454	111.8245	'SPP-SWPS-03'
13G	03ALL	'TO->FROM'	'GREENSBURG - SSTARTP3 115.00 115KV CKT 1	120.7	129.5	0.39941	111.8245	'SPP-SWPS-03'
13G	03ALL	'TO->FROM'	'GREENSBURG - SSTARTP3 115.00 115KV CKT 1	120.7	129.5	0.03094	111.8245	'SPP-SWPS-03'
13G	03ALL	'TO->FROM'	'GREENSBURG - SSTARTP3 115.00 115KV CKT 1	120.7	129.5	0.0351	111.8245	'SPP-SWPS-03'
13G	03ALL	'TO->FROM'	'GREENSBURG - SSTARTP3 115.00 115KV CKT 1	120.7	129.5	0.0351	111.8245	'SPP-SWPS-03'
13G	03ALL	'TO->FROM'	'GREENSBURG - SSTARTP3 115.00 115KV CKT 1	120.7	129.5	0.03098	111.8245	'SPP-SWPS-03'
13G	03ALL	'TO->FROM'	'GREENSBURG - SSTARTP3 115.00 115KV CKT 1	120.7	129.5	0.03765	111.8245	'SPP-SWPS-03'
13G	03ALL	'TO->FROM'	'GREENSBURG - SSTARTP3 115.00 115KV CKT 1	120.7	129.5	0.0325	111.8245	'SPP-SWPS-03'
13G	03ALL	'FROM->TO'	'HARPER - MILAN TAP 138KV CKT 1'	95.6	95.6	0.03593	154.4193	'SPP-SWPS-03'
13G	03ALL	'FROM->TO'	'HARPER - MILAN TAP 138KV CKT 1'	95.6	95.6	0.0626	154.4193	'SPP-SWPS-03'
13G	03ALL	'FROM->TO'	'HARPER - MILAN TAP 138KV CKT 1'	95.6	95.6	0.10924	154.4193	'SPP-SWPS-03'
13G	03ALL	'FROM->TO'	'HARPER - MILAN TAP 138KV CKT 1'	95.6	95.6	0.04924	154.4193	'SPP-SWPS-03'
13G	03ALL	'FROM->TO'	'HARPER - MILAN TAP 138KV CKT 1'	95.6	95.6	0.04924	154.4193	'SPP-SWPS-03'
13G	03ALL	'FROM->TO'	'HARPER - MILAN TAP 138KV CKT 1'	95.6	95.6	0.21084	154.4193	'SPP-SWPS-03'
13G	03ALL	'FROM->TO'	'HARPER - MILAN TAP 138KV CKT 1'	95.6	95.6	0.03876	154.4193	'SPP-SWPS-03'
13G	03ALL	'FROM->TO'	'HARPER - MILAN TAP 138KV CKT 1'	95.6	95.6	0.04056	154.4193	'SPP-SWPS-03'
13G	03ALL	'FROM->TO'	'HARPER - MILAN TAP 138KV CKT 1'	95.6	95.6	0.04056	154.4193	'SPP-SWPS-03'
13G	03ALL	'FROM->TO'	'HARPER - MILAN TAP 138KV CKT 1'	95.6	95.6	0.52704	154.4193	'SPP-SWPS-03'
13G	03ALL	'FROM->TO'	'HARPER - MILAN TAP 138KV CKT 1'	95.6	95.6	0.03816	154.4193	'SPP-SWPS-03'
13G	03ALL	'FROM->TO'	'HARPER - MILAN TAP 138KV CKT 1'	95.6	95.6	0.04353	154.4193	'SPP-SWPS-03'
13G	03ALL	'FROM->TO'	'HARPER - MILAN TAP 138KV CKT 1'	95.6	95.6	0.03755	154.4193	'SPP-SWPS-03'
13G	03ALL	'TO->FROM'	'MEDICINE LODGE - SUN CITY 115KV CKT 1'	120.7	129.5	0.17814	101.3639	'SPP-SWPS-03'
13G	03ALL	'TO->FROM'	'MEDICINE LODGE - SUN CITY 115KV CKT 1'	120.7	129.5	0.0454	101.3639	'SPP-SWPS-03'
13G	03ALL	'TO->FROM'	'MEDICINE LODGE - SUN CITY 115KV CKT 1'	120.7	129.5	0.0454	101.3639	'SPP-SWPS-03'
13G	03ALL	'TO->FROM'	'MEDICINE LODGE - SUN CITY 115KV CKT 1'	120.7	129.5	0.39941	101.3639	'SPP-SWPS-03'
13G	03ALL	'TO->FROM'	'MEDICINE LODGE - SUN CITY 115KV CKT 1'	120.7	129.5	0.03094	101.3639	'SPP-SWPS-03'
13G	03ALL	'TO->FROM'	'MEDICINE LODGE - SUN CITY 115KV CKT 1'	120.7	129.5	0.0351	101.3639	'SPP-SWPS-03'
13G	03ALL	'TO->FROM'	'MEDICINE LODGE - SUN CITY 115KV CKT 1'	120.7	129.5	0.0351	101.3639	'SPP-SWPS-03'
13G	03ALL	'TO->FROM'	'MEDICINE LODGE - SUN CITY 115KV CKT 1'	120.7	129.5	0.03098	101.3639	'SPP-SWPS-03'
13G	03ALL	'TO->FROM'	'MEDICINE LODGE - SUN CITY 115KV CKT 1'	120.7	129.5	0.03765	101.3639	'SPP-SWPS-03'
13G	03ALL	'TO->FROM'	'MEDICINE LODGE - SUN CITY 115KV CKT 1'	120.7	129.5	0.0325	101.3639	'SPP-SWPS-03'
13G	03ALL	'TO->FROM'	'BARBER 3 115.00 - MEDICINE LODGE 115KV CKT 1'	79.7	79.7	0.11655	100.9276	'SPP-SWPS-03'
13G	03ALL	'TO->FROM'	'BARBER 3 115.00 - MEDICINE LODGE 115KV CKT 1'	79.7	79.7	0.03541	100.9276	'SPP-SWPS-03'
13G	03ALL	'TO->FROM'	'BARBER 3 115.00 - MEDICINE LODGE 115KV CKT 1'	79.7	79.7	0.03541	100.9276	'SPP-SWPS-03'
13G	03ALL	'TO->FROM'	'BARBER 3 115.00 - MEDICINE LODGE 115KV CKT 1'	79.7	79.7	0.25221	100.9276	'SPP-SWPS-03'
13G	03ALL	'TO->FROM'	'BARBER 3 115.00 - MEDICINE LODGE 115KV CKT 1'	79.7	79.7	0.03009	100.9276	'SPP-SWPS-03'
13G	03ALL	'FROM->TO'	'SMOKYHL6 230.00 - SUMMIT 230KV CKT 1'	319	319	0.19016	109.822	'SPP-SWPS-04'
13G	03ALL	'FROM->TO'	'SMOKYHL6 230.00 - SUMMIT 230KV CKT 1'	319	319	0.0947	109.822	'SPP-SWPS-04'
13G	03ALL	'FROM->TO'	'SMOKYHL6 230.00 - SUMMIT 230KV CKT 1'	319	319	0.10896	109.822	'SPP-SWPS-04'
13G	03ALL	'FROM->TO'	'SMOKYHL6 230.00 - SUMMIT 230KV CKT 1'	319	319	0.12813	109.822	'SPP-SWPS-04'
13G	03ALL	'FROM->TO'	'SMOKYHL6 230.00 - SUMMIT 230KV CKT 1'	319	319	0.12813	109.822	'SPP-SWPS-04'
13G	03ALL	'FROM->TO'	'SMOKYHL6 230.00 - SUMMIT 230KV CKT 1'	319	319	0.08298	109.822	'SPP-SWPS-04'
13G	03ALL	'FROM->TO'	'SMOKYHL6 230.00 - SUMMIT 230KV CKT 1'	319	319	0.10693	109.822	'SPP-SWPS-04'
13G	03ALL	'FROM->TO'	'SMOKYHL6 230.00 - SUMMIT 230KV CKT 1'	319	319	0.12195	109.822	'SPP-SWPS-04'

SEASON	GROUP	DIRECTION	MONITORED ELEMENT	RATE A (MVA)	RATE B (MVA)	TDF	TC%LOADING (%MVA)	CONTINGENCY NAME
13G	03ALL	'FROM->TO'	'SMOKYHL6 230.00 - SUMMIT 230KV CKT 1'	319	319	0.12195	109.822	'SPP-SWPS-04'
13G	03ALL	'FROM->TO'	'SMOKYHL6 230.00 - SUMMIT 230KV CKT 1'	319	319	0.62984	109.822	'SPP-SWPS-04'
13G	03ALL	'FROM->TO'	'SMOKYHL6 230.00 - SUMMIT 230KV CKT 1'	319	319	0.10685	109.822	'SPP-SWPS-04'
13G	03ALL	'FROM->TO'	'SMOKYHL6 230.00 - SUMMIT 230KV CKT 1'	319	319	0.1335	109.822	'SPP-SWPS-04'
13G	03ALL	'FROM->TO'	'SMOKYHL6 230.00 - SUMMIT 230KV CKT 1'	319	319	0.11027	109.822	'SPP-SWPS-04'
13G	03ALL	'TO->FROM'	'CLEARWATER - MILAN TAP 138KV CKT 1'	110	110	0.03736	127.2681	'SPP-SWPS-04'
13G	03ALL	'TO->FROM'	'CLEARWATER - MILAN TAP 138KV CKT 1'	110	110	0.06404	127.2681	'SPP-SWPS-04'
13G	03ALL	'TO->FROM'	'CLEARWATER - MILAN TAP 138KV CKT 1'	110	110	0.11067	127.2681	'SPP-SWPS-04'
13G	03ALL	'TO->FROM'	'CLEARWATER - MILAN TAP 138KV CKT 1'	110	110	0.05067	127.2681	'SPP-SWPS-04'
13G	03ALL	'TO->FROM'	'CLEARWATER - MILAN TAP 138KV CKT 1'	110	110	0.05067	127.2681	'SPP-SWPS-04'
13G	03ALL	'TO->FROM'	'CLEARWATER - MILAN TAP 138KV CKT 1'	110	110	0.21228	127.2681	'SPP-SWPS-04'
13G	03ALL	'TO->FROM'	'CLEARWATER - MILAN TAP 138KV CKT 1'	110	110	0.04019	127.2681	'SPP-SWPS-04'
13G	03ALL	'TO->FROM'	'CLEARWATER - MILAN TAP 138KV CKT 1'	110	110	0.042	127.2681	'SPP-SWPS-04'
13G	03ALL	'TO->FROM'	'CLEARWATER - MILAN TAP 138KV CKT 1'	110	110	0.042	127.2681	'SPP-SWPS-04'
13G	03ALL	'TO->FROM'	'CLEARWATER - MILAN TAP 138KV CKT 1'	110	110	0.52848	127.2681	'SPP-SWPS-04'
13G	03ALL	'TO->FROM'	'CLEARWATER - MILAN TAP 138KV CKT 1'	110	110	0.03959	127.2681	'SPP-SWPS-04'
13G	03ALL	'TO->FROM'	'CLEARWATER - MILAN TAP 138KV CKT 1'	110	110	0.04496	127.2681	'SPP-SWPS-04'
13G	03ALL	'TO->FROM'	'CLEARWATER - MILAN TAP 138KV CKT 1'	110	110	0.03898	127.2681	'SPP-SWPS-04'
13G	03ALL	'FROM->TO'	'GREENSBURG - SUN CITY 115KV CKT 1'	120.7	129.5	0.17937	103.0798	'SPP-SWPS-04'
13G	03ALL	'FROM->TO'	'GREENSBURG - SUN CITY 115KV CKT 1'	120.7	129.5	0.04662	103.0798	'SPP-SWPS-04'
13G	03ALL	'FROM->TO'	'GREENSBURG - SUN CITY 115KV CKT 1'	120.7	129.5	0.04662	103.0798	'SPP-SWPS-04'
13G	03ALL	'FROM->TO'	'GREENSBURG - SUN CITY 115KV CKT 1'	120.7	129.5	0.40064	103.0798	'SPP-SWPS-04'
13G	03ALL	'FROM->TO'	'GREENSBURG - SUN CITY 115KV CKT 1'	120.7	129.5	0.03217	103.0798	'SPP-SWPS-04'
13G	03ALL	'FROM->TO'	'GREENSBURG - SUN CITY 115KV CKT 1'	120.7	129.5	0.03633	103.0798	'SPP-SWPS-04'
13G	03ALL	'FROM->TO'	'GREENSBURG - SUN CITY 115KV CKT 1'	120.7	129.5	0.03633	103.0798	'SPP-SWPS-04'
13G	03ALL	'FROM->TO'	'GREENSBURG - SUN CITY 115KV CKT 1'	120.7	129.5	0.03221	103.0798	'SPP-SWPS-04'
13G	03ALL	'FROM->TO'	'GREENSBURG - SUN CITY 115KV CKT 1'	120.7	129.5	0.03888	103.0798	'SPP-SWPS-04'
13G	03ALL	'FROM->TO'	'GREENSBURG - SUN CITY 115KV CKT 1'	120.7	129.5	0.03373	103.0798	'SPP-SWPS-04'
13G	03ALL	'TO->FROM'	'GREENSBURG - SSTARTP3 115.00 115KV CKT 1	120.7	129.5	0.17937	110.9385	'SPP-SWPS-04'
13G	03ALL	'TO->FROM'	'GREENSBURG - SSTARTP3 115.00 115KV CKT 1	120.7	129.5	0.04662	110.9385	'SPP-SWPS-04'
13G	03ALL	'TO->FROM'	'GREENSBURG - SSTARTP3 115.00 115KV CKT 1	120.7	129.5	0.04662	110.9385	'SPP-SWPS-04'
13G	03ALL	'TO->FROM'	'GREENSBURG - SSTARTP3 115.00 115KV CKT 1	120.7	129.5	0.40064	110.9385	'SPP-SWPS-04'
13G	03ALL	'TO->FROM'	'GREENSBURG - SSTARTP3 115.00 115KV CKT 1	120.7	129.5	0.03217	110.9385	'SPP-SWPS-04'
13G	03ALL	'TO->FROM'	'GREENSBURG - SSTARTP3 115.00 115KV CKT 1	120.7	129.5	0.03633	110.9385	'SPP-SWPS-04'
13G	03ALL	'TO->FROM'	'GREENSBURG - SSTARTP3 115.00 115KV CKT 1	120.7	129.5	0.03633	110.9385	'SPP-SWPS-04'
13G	03ALL	'TO->FROM'	'GREENSBURG - SSTARTP3 115.00 115KV CKT 1	120.7	129.5	0.03221	110.9385	'SPP-SWPS-04'
13G	03ALL	'TO->FROM'	'GREENSBURG - SSTARTP3 115.00 115KV CKT 1	120.7	129.5	0.03888	110.9385	'SPP-SWPS-04'
13G	03ALL	'TO->FROM'	'GREENSBURG - SSTARTP3 115.00 115KV CKT 1	120.7	129.5	0.03373	110.9385	'SPP-SWPS-04'
13G	03ALL	'FROM->TO'	'HARPER - MILAN TAP 138KV CKT 1'	95.6	95.6	0.03736	153.7244	'SPP-SWPS-04'
13G	03ALL	'FROM->TO'	'HARPER - MILAN TAP 138KV CKT 1'	95.6	95.6	0.06404	153.7244	'SPP-SWPS-04'
13G	03ALL	'FROM->TO'	'HARPER - MILAN TAP 138KV CKT 1'	95.6	95.6	0.11067	153.7244	'SPP-SWPS-04'
13G	03ALL	'FROM->TO'	'HARPER - MILAN TAP 138KV CKT 1'	95.6	95.6	0.05067	153.7244	'SPP-SWPS-04'
13G	03ALL	'FROM->TO'	'HARPER - MILAN TAP 138KV CKT 1'	95.6	95.6	0.05067	153.7244	'SPP-SWPS-04'
13G	03ALL	'FROM->TO'	'HARPER - MILAN TAP 138KV CKT 1'	95.6	95.6	0.21228	153.7244	'SPP-SWPS-04'
13G	03ALL	'FROM->TO'	'HARPER - MILAN TAP 138KV CKT 1'	95.6	95.6	0.04019	153.7244	'SPP-SWPS-04'
13G	03ALL	'FROM->TO'	'HARPER - MILAN TAP 138KV CKT 1'	95.6	95.6	0.042	153.7244	'SPP-SWPS-04'
13G	03ALL	'FROM->TO'	'HARPER - MILAN TAP 138KV CKT 1'	95.6	95.6	0.042	153.7244	'SPP-SWPS-04'
13G	03ALL	'FROM->TO'	'HARPER - MILAN TAP 138KV CKT 1'	95.6	95.6	0.52848	153.7244	'SPP-SWPS-04'
13G	03ALL	'FROM->TO'	'HARPER - MILAN TAP 138KV CKT 1'	95.6	95.6	0.03959	153.7244	'SPP-SWPS-04'
13G	03ALL	'FROM->TO'	'HARPER - MILAN TAP 138KV CKT 1'	95.6	95.6	0.04496	153.7244	'SPP-SWPS-04'
13G	03ALL	'FROM->TO'	'HARPER - MILAN TAP 138KV CKT 1'	95.6	95.6	0.03898	153.7244	'SPP-SWPS-04'
13G	03ALL	'TO->FROM'	'MEDICINE LODGE - SUN CITY 115KV CKT 1'	120.7	129.5	0.17937	100.5012	'SPP-SWPS-04'
13G	03ALL	'TO->FROM'	'MEDICINE LODGE - SUN CITY 115KV CKT 1'	120.7	129.5	0.04662	100.5012	'SPP-SWPS-04'
13G	03ALL	'TO->FROM'	'MEDICINE LODGE - SUN CITY 115KV CKT 1'	120.7	129.5	0.04662	100.5012	'SPP-SWPS-04'
13G	03ALL	'TO->FROM'	'MEDICINE LODGE - SUN CITY 115KV CKT 1'	120.7	129.5	0.40064	100.5012	'SPP-SWPS-04'
13G	03ALL	'TO->FROM'	'MEDICINE LODGE - SUN CITY 115KV CKT 1'	120.7	129.5	0.03217	100.5012	'SPP-SWPS-04'
13G	03ALL	'TO->FROM'	'MEDICINE LODGE - SUN CITY 115KV CKT 1'	120.7	129.5	0.03633	100.5012	'SPP-SWPS-04'
13G	03ALL	'TO->FROM'	'MEDICINE LODGE - SUN CITY 115KV CKT 1'	120.7	129.5	0.03633	100.5012	'SPP-SWPS-04'
13G	03ALL	'TO->FROM'	'MEDICINE LODGE - SUN CITY 115KV CKT 1'	120.7	129.5	0.03221	100.5012	'SPP-SWPS-04'
13G	03ALL	'TO->FROM'	'MEDICINE LODGE - SUN CITY 115KV CKT 1'	120.7	129.5	0.03888	100.5012	'SPP-SWPS-04'
13G	03ALL	'TO->FROM'	'MEDICINE LODGE - SUN CITY 115KV CKT 1'	120.7	129.5	0.03373	100.5012	'SPP-SWPS-04'
13G	03ALL	'TO->FROM'	'BARBER 3 115.00 - MEDICINE LODGE 115KV CKT 1'	79.7	79.7	0.11753	100	'SPP-SWPS-04'
13G	03ALL	'TO->FROM'	'BARBER 3 115.00 - MEDICINE LODGE 115KV CKT 1'	79.7	79.7	0.0364	100	'SPP-SWPS-04'
13G	03ALL	'TO->FROM'	'BARBER 3 115.00 - MEDICINE LODGE 115KV CKT 1'	79.7	79.7	0.0364	100	'SPP-SWPS-04'

SEASON	GROUP	DIRECTION	MONITORED ELEMENT	RATE A (MVA)	RATE B (MVA)	TDF	TC%LOADING (%MVA)	CONTINGENCY NAME
13G	03ALL	'TO->FROM'	'BARBER 3 115.00 - MEDICINE LODGE 115KV CKT 1'	79.7	79.7	0.25319	100	'SPP-SWPS-04'
13G	03ALL	'TO->FROM'	'BARBER 3 115.00 - MEDICINE LODGE 115KV CKT 1'	79.7	79.7	0.03107	100	'SPP-SWPS-04'
13G	03ALL	'FROM->TO'	'SMOKYHL6 230.00 - SUMMIT 230KV CKT 1'	319	319	0.1894	109.7805	'SPP-MKEC-05'
13G	03ALL	'FROM->TO'	'SMOKYHL6 230.00 - SUMMIT 230KV CKT 1'	319	319	0.09662	109.7805	'SPP-MKEC-05'
13G	03ALL	'FROM->TO'	'SMOKYHL6 230.00 - SUMMIT 230KV CKT 1'	319	319	0.11518	109.7805	'SPP-MKEC-05'
13G	03ALL	'FROM->TO'	'SMOKYHL6 230.00 - SUMMIT 230KV CKT 1'	319	319	0.12757	109.7805	'SPP-MKEC-05'
13G	03ALL	'FROM->TO'	'SMOKYHL6 230.00 - SUMMIT 230KV CKT 1'	319	319	0.12757	109.7805	'SPP-MKEC-05'
13G	03ALL	'FROM->TO'	'SMOKYHL6 230.00 - SUMMIT 230KV CKT 1'	319	319	0.10116	109.7805	'SPP-MKEC-05'
13G	03ALL	'FROM->TO'	'SMOKYHL6 230.00 - SUMMIT 230KV CKT 1'	319	319	0.10403	109.7805	'SPP-MKEC-05'
13G	03ALL	'FROM->TO'	'SMOKYHL6 230.00 - SUMMIT 230KV CKT 1'	319	319	0.11941	109.7805	'SPP-MKEC-05'
13G	03ALL	'FROM->TO'	'SMOKYHL6 230.00 - SUMMIT 230KV CKT 1'	319	319	0.11941	109.7805	'SPP-MKEC-05'
13G	03ALL	'FROM->TO'	'SMOKYHL6 230.00 - SUMMIT 230KV CKT 1'	319	319	0.62817	109.7805	'SPP-MKEC-05'
13G	03ALL	'FROM->TO'	'SMOKYHL6 230.00 - SUMMIT 230KV CKT 1'	319	319	0.07765	109.7805	'SPP-MKEC-05'
13G	03ALL	'FROM->TO'	'SMOKYHL6 230.00 - SUMMIT 230KV CKT 1'	319	319	0.10397	109.7805	'SPP-MKEC-05'
13G	03ALL	'FROM->TO'	'SMOKYHL6 230.00 - SUMMIT 230KV CKT 1'	319	319	0.13209	109.7805	'SPP-MKEC-05'
13G	03ALL	'FROM->TO'	'SMOKYHL6 230.00 - SUMMIT 230KV CKT 1'	319	319	0.10657	109.7805	'SPP-MKEC-05'
13G	03ALL	'FROM->TO'	'HUNTSVILLE - HUTCHINSON ENERGY CENTER 115KV CKT 1	68	68	0.03692	110.8586	'SPP-MKEC-05'
13G	03ALL	'FROM->TO'	'HUNTSVILLE - HUTCHINSON ENERGY CENTER 115KV CKT 1	68	68	0.09576	110.8586	'SPP-MKEC-05'
13G	03ALL	'FROM->TO'	'HUNTSVILLE - HUTCHINSON ENERGY CENTER 115KV CKT 1	68	68	0.08418	110.8586	'SPP-MKEC-05'
13G	03ALL	'FROM->TO'	'HUNTSVILLE - HUTCHINSON ENERGY CENTER 115KV CKT 1	68	68	0.04613	110.8586	'SPP-MKEC-05'
13G	03ALL	'FROM->TO'	'HUNTSVILLE - HUTCHINSON ENERGY CENTER 115KV CKT 1	68	68	0.04613	110.8586	'SPP-MKEC-05'
13G	03ALL	'FROM->TO'	'HUNTSVILLE - HUTCHINSON ENERGY CENTER 115KV CKT 1	68	68	0.14951	110.8586	'SPP-MKEC-05'
13G	03ALL	'FROM->TO'	'HUNTSVILLE - HUTCHINSON ENERGY CENTER 115KV CKT 1	68	68	0.03819	110.8586	'SPP-MKEC-05'
13G	03ALL	'FROM->TO'	'HUNTSVILLE - HUTCHINSON ENERGY CENTER 115KV CKT 1	68	68	0.03804	110.8586	'SPP-MKEC-05'
13G	03ALL	'FROM->TO'	'HUNTSVILLE - HUTCHINSON ENERGY CENTER 115KV CKT 1	68	68	0.03804	110.8586	'SPP-MKEC-05'
13G	03ALL	'FROM->TO'	'HUNTSVILLE - HUTCHINSON ENERGY CENTER 115KV CKT 1	68	68	0.25947	110.8586	'SPP-MKEC-05'
13G	03ALL	'FROM->TO'	'HUNTSVILLE - HUTCHINSON ENERGY CENTER 115KV CKT 1	68	68	0.03723	110.8586	'SPP-MKEC-05'
13G	03ALL	'FROM->TO'	'HUNTSVILLE - HUTCHINSON ENERGY CENTER 115KV CKT 1	68	68	0.0409	110.8586	'SPP-MKEC-05'
13G	03ALL	'FROM->TO'	'HUNTSVILLE - HUTCHINSON ENERGY CENTER 115KV CKT 1	68	68	0.03512	110.8586	'SPP-MKEC-05'
13G	03ALL	'FROM->TO'	'ST JOHN - ST_JOHN 115KV CKT 1'	86	86	0.03692	125.2482	'SPP-MKEC-05'
13G	03ALL	'FROM->TO'	'ST JOHN - ST_JOHN 115KV CKT 1'	86	86	0.09576	125.2482	'SPP-MKEC-05'
13G	03ALL	'FROM->TO'	'ST JOHN - ST_JOHN 115KV CKT 1'	86	86	0.08418	125.2482	'SPP-MKEC-05'
13G	03ALL	'FROM->TO'	'ST JOHN - ST_JOHN 115KV CKT 1'	86	86	0.04613	125.2482	'SPP-MKEC-05'
13G	03ALL	'FROM->TO'	'ST JOHN - ST_JOHN 115KV CKT 1'	86	86	0.04613	125.2482	'SPP-MKEC-05'
13G	03ALL	'FROM->TO'	'ST JOHN - ST_JOHN 115KV CKT 1'	86	86	0.14951	125.2482	'SPP-MKEC-05'
13G	03ALL	'FROM->TO'	'ST JOHN - ST_JOHN 115KV CKT 1'	86	86	0.03819	125.2482	'SPP-MKEC-05'
13G	03ALL	'FROM->TO'	'ST JOHN - ST_JOHN 115KV CKT 1'	86	86	0.03804	125.2482	'SPP-MKEC-05'
13G	03ALL	'FROM->TO'	'ST JOHN - ST_JOHN 115KV CKT 1'	86	86	0.03804	125.2482	'SPP-MKEC-05'
13G	03ALL	'FROM->TO'	'ST JOHN - ST_JOHN 115KV CKT 1'	86	86	0.25947	125.2482	'SPP-MKEC-05'
13G	03ALL	'FROM->TO'	'ST JOHN - ST_JOHN 115KV CKT 1'	86	86	0.03723	125.2482	'SPP-MKEC-05'
13G	03ALL	'FROM->TO'	'ST JOHN - ST_JOHN 115KV CKT 1'	86	86	0.0409	125.2482	'SPP-MKEC-05'
13G	03ALL	'FROM->TO'	'ST JOHN - ST_JOHN 115KV CKT 1'	86	86	0.03512	125.2482	'SPP-MKEC-05'
13G	03ALL	'FROM->TO'	'SMOKYHL6 230.00 - SUMMIT 230KV CKT 1'	319	319	0.19136	107.5001	'SPP-MKEC-06'
13G	03ALL	'FROM->TO'	'SMOKYHL6 230.00 - SUMMIT 230KV CKT 1'	319	319	0.1071	107.5001	'SPP-MKEC-06'
13G	03ALL	'FROM->TO'	'SMOKYHL6 230.00 - SUMMIT 230KV CKT 1'	319	319	0.10153	107.5001	'SPP-MKEC-06'
13G	03ALL	'FROM->TO'	'SMOKYHL6 230.00 - SUMMIT 230KV CKT 1'	319	319	0.12666	107.5001	'SPP-MKEC-06'
13G	03ALL	'FROM->TO'	'SMOKYHL6 230.00 - SUMMIT 230KV CKT 1'	319	319	0.12666	107.5001	'SPP-MKEC-06'
13G	03ALL	'FROM->TO'	'SMOKYHL6 230.00 - SUMMIT 230KV CKT 1'	319	319	0.06643	107.5001	'SPP-MKEC-06'
13G	03ALL	'FROM->TO'	'SMOKYHL6 230.00 - SUMMIT 230KV CKT 1'	319	319	0.10419	107.5001	'SPP-MKEC-06'
13G	03ALL	'FROM->TO'	'SMOKYHL6 230.00 - SUMMIT 230KV CKT 1'	319	319	0.11901	107.5001	'SPP-MKEC-06'
13G	03ALL	'FROM->TO'	'SMOKYHL6 230.00 - SUMMIT 230KV CKT 1'	319	319	0.11901	107.5001	'SPP-MKEC-06'
13G	03ALL	'FROM->TO'	'SMOKYHL6 230.00 - SUMMIT 230KV CKT 1'	319	319	0.62805	107.5001	'SPP-MKEC-06'
13G	03ALL	'FROM->TO'	'SMOKYHL6 230.00 - SUMMIT 230KV CKT 1'	319	319	0.10401	107.5001	'SPP-MKEC-06'
13G	03ALL	'FROM->TO'	'SMOKYHL6 230.00 - SUMMIT 230KV CKT 1'	319	319	0.13162	107.5001	'SPP-MKEC-06'
13G	03ALL	'FROM->TO'	'SMOKYHL6 230.00 - SUMMIT 230KV CKT 1'	319	319	0.10623	107.5001	'SPP-MKEC-06'
13G	03ALL	'TO->FROM'	'CLEARWATER - MILAN TAP 138KV CKT 1'	110	110	0.11217	108.2651	'SPP-MKEC-06'
13G	03ALL	'TO->FROM'	'CLEARWATER - MILAN TAP 138KV CKT 1'	110	110	0.03912	108.2651	'SPP-MKEC-06'
13G	03ALL	'TO->FROM'	'CLEARWATER - MILAN TAP 138KV CKT 1'	110	110	0.03912	108.2651	'SPP-MKEC-06'
13G	03ALL	'TO->FROM'	'CLEARWATER - MILAN TAP 138KV CKT 1'	110	110	0.23492	108.2651	'SPP-MKEC-06'
13G	03ALL	'TO->FROM'	'CLEARWATER - MILAN TAP 138KV CKT 1'	110	110	0.03111	108.2651	'SPP-MKEC-06'
13G	03ALL	'TO->FROM'	'CLEARWATER - MILAN TAP 138KV CKT 1'	110	110	0.03111	108.2651	'SPP-MKEC-06'
13G	03ALL	'TO->FROM'	'CLEARWATER - MILAN TAP 138KV CKT 1'	110	110	0.57325	108.2651	'SPP-MKEC-06'
13G	03ALL	'TO->FROM'	'CLEARWATER - MILAN TAP 138KV CKT 1'	110	110	0.03375	108.2651	'SPP-MKEC-06'
13G	03ALL	'FROM->TO'	'GREENSBURG - SUN CITY 115KV CKT 1'	120.7	129.5	0.17466	107.9629	'SPP-MKEC-06'

SEASON	GROUP	DIRECTION	MONITORED ELEMENT	RATE A (MVA)	RATE B (MVA)	TDF	TC%LOADING (%MVA)	CONTINGENCY NAME
13G	03ALL	'FROM->TO'	'GREENSBURG - SUN CITY 115KV CKT 1'	120.7	129.5	0.05203	107.9629	'SPP-MKEC-06'
13G	03ALL	'FROM->TO'	'GREENSBURG - SUN CITY 115KV CKT 1'	120.7	129.5	0.05203	107.9629	'SPP-MKEC-06'
13G	03ALL	'FROM->TO'	'GREENSBURG - SUN CITY 115KV CKT 1'	120.7	129.5	0.37981	107.9629	'SPP-MKEC-06'
13G	03ALL	'FROM->TO'	'GREENSBURG - SUN CITY 115KV CKT 1'	120.7	129.5	0.037	107.9629	'SPP-MKEC-06'
13G	03ALL	'FROM->TO'	'GREENSBURG - SUN CITY 115KV CKT 1'	120.7	129.5	0.04061	107.9629	'SPP-MKEC-06'
13G	03ALL	'FROM->TO'	'GREENSBURG - SUN CITY 115KV CKT 1'	120.7	129.5	0.04061	107.9629	'SPP-MKEC-06'
13G	03ALL	'FROM->TO'	'GREENSBURG - SUN CITY 115KV CKT 1'	120.7	129.5	0.03678	107.9629	'SPP-MKEC-06'
13G	03ALL	'FROM->TO'	'GREENSBURG - SUN CITY 115KV CKT 1'	120.7	129.5	0.04389	107.9629	'SPP-MKEC-06'
13G	03ALL	'FROM->TO'	'GREENSBURG - SUN CITY 115KV CKT 1'	120.7	129.5	0.03726	107.9629	'SPP-MKEC-06'
13G	03ALL	'TO->FROM'	'GREENSBURG - SSTARTP3 115.00 115KV CKT 1	120.7	129.5	0.17466	115.7956	'SPP-MKEC-06'
13G	03ALL	'TO->FROM'	'GREENSBURG - SSTARTP3 115.00 115KV CKT 1	120.7	129.5	0.05203	115.7956	'SPP-MKEC-06'
13G	03ALL	'TO->FROM'	'GREENSBURG - SSTARTP3 115.00 115KV CKT 1	120.7	129.5	0.05203	115.7956	'SPP-MKEC-06'
13G	03ALL	'TO->FROM'	'GREENSBURG - SSTARTP3 115.00 115KV CKT 1	120.7	129.5	0.37981	115.7956	'SPP-MKEC-06'
13G	03ALL	'TO->FROM'	'GREENSBURG - SSTARTP3 115.00 115KV CKT 1	120.7	129.5	0.037	115.7956	'SPP-MKEC-06'
13G	03ALL	'TO->FROM'	'GREENSBURG - SSTARTP3 115.00 115KV CKT 1	120.7	129.5	0.04061	115.7956	'SPP-MKEC-06'
13G	03ALL	'TO->FROM'	'GREENSBURG - SSTARTP3 115.00 115KV CKT 1	120.7	129.5	0.04061	115.7956	'SPP-MKEC-06'
13G	03ALL	'TO->FROM'	'GREENSBURG - SSTARTP3 115.00 115KV CKT 1	120.7	129.5	0.03678	115.7956	'SPP-MKEC-06'
13G	03ALL	'TO->FROM'	'GREENSBURG - SSTARTP3 115.00 115KV CKT 1	120.7	129.5	0.04389	115.7956	'SPP-MKEC-06'
13G	03ALL	'TO->FROM'	'GREENSBURG - SSTARTP3 115.00 115KV CKT 1	120.7	129.5	0.03726	115.7956	'SPP-MKEC-06'
13G	03ALL	'FROM->TO'	'HARPER - MILAN TAP 138KV CKT 1'	95.6	95.6	0.11217	131.9118	'SPP-MKEC-06'
13G	03ALL	'FROM->TO'	'HARPER - MILAN TAP 138KV CKT 1'	95.6	95.6	0.03912	131.9118	'SPP-MKEC-06'
13G	03ALL	'FROM->TO'	'HARPER - MILAN TAP 138KV CKT 1'	95.6	95.6	0.03912	131.9118	'SPP-MKEC-06'
13G	03ALL	'FROM->TO'	'HARPER - MILAN TAP 138KV CKT 1'	95.6	95.6	0.23492	131.9118	'SPP-MKEC-06'
13G	03ALL	'FROM->TO'	'HARPER - MILAN TAP 138KV CKT 1'	95.6	95.6	0.03111	131.9118	'SPP-MKEC-06'
13G	03ALL	'FROM->TO'	'HARPER - MILAN TAP 138KV CKT 1'	95.6	95.6	0.03111	131.9118	'SPP-MKEC-06'
13G	03ALL	'FROM->TO'	'HARPER - MILAN TAP 138KV CKT 1'	95.6	95.6	0.57325	131.9118	'SPP-MKEC-06'
13G	03ALL	'FROM->TO'	'HARPER - MILAN TAP 138KV CKT 1'	95.6	95.6	0.03375	131.9118	'SPP-MKEC-06'
13G	03ALL	'TO->FROM'	'MEDICINE LODGE - SUN CITY 115KV CKT 1'	120.7	129.5	0.17466	105.3769	'SPP-MKEC-06'
13G	03ALL	'TO->FROM'	'MEDICINE LODGE - SUN CITY 115KV CKT 1'	120.7	129.5	0.05203	105.3769	'SPP-MKEC-06'
13G	03ALL	'TO->FROM'	'MEDICINE LODGE - SUN CITY 115KV CKT 1'	120.7	129.5	0.05203	105.3769	'SPP-MKEC-06'
13G	03ALL	'TO->FROM'	'MEDICINE LODGE - SUN CITY 115KV CKT 1'	120.7	129.5	0.37981	105.3769	'SPP-MKEC-06'
13G	03ALL	'TO->FROM'	'MEDICINE LODGE - SUN CITY 115KV CKT 1'	120.7	129.5	0.037	105.3769	'SPP-MKEC-06'
13G	03ALL	'TO->FROM'	'MEDICINE LODGE - SUN CITY 115KV CKT 1'	120.7	129.5	0.04061	105.3769	'SPP-MKEC-06'
13G	03ALL	'TO->FROM'	'MEDICINE LODGE - SUN CITY 115KV CKT 1'	120.7	129.5	0.04061	105.3769	'SPP-MKEC-06'
13G	03ALL	'TO->FROM'	'MEDICINE LODGE - SUN CITY 115KV CKT 1'	120.7	129.5	0.03678	105.3769	'SPP-MKEC-06'
13G	03ALL	'TO->FROM'	'MEDICINE LODGE - SUN CITY 115KV CKT 1'	120.7	129.5	0.04389	105.3769	'SPP-MKEC-06'
13G	03ALL	'TO->FROM'	'MEDICINE LODGE - SUN CITY 115KV CKT 1'	120.7	129.5	0.03726	105.3769	'SPP-MKEC-06'
13G	03ALL	'FROM->TO'	'SMOKYHL6 230.00 - SUMMIT 230KV CKT 1'	319	319	0.1894	112.2584	'SPP-MKEC-08'
13G	03ALL	'FROM->TO'	'SMOKYHL6 230.00 - SUMMIT 230KV CKT 1'	319	319	0.09662	112.2584	'SPP-MKEC-08'
13G	03ALL	'FROM->TO'	'SMOKYHL6 230.00 - SUMMIT 230KV CKT 1'	319	319	0.11518	112.2584	'SPP-MKEC-08'
13G	03ALL	'FROM->TO'	'SMOKYHL6 230.00 - SUMMIT 230KV CKT 1'	319	319	0.12757	112.2584	'SPP-MKEC-08'
13G	03ALL	'FROM->TO'	'SMOKYHL6 230.00 - SUMMIT 230KV CKT 1'	319	319	0.12757	112.2584	'SPP-MKEC-08'
13G	03ALL	'FROM->TO'	'SMOKYHL6 230.00 - SUMMIT 230KV CKT 1'	319	319	0.10116	112.2584	'SPP-MKEC-08'
13G	03ALL	'FROM->TO'	'SMOKYHL6 230.00 - SUMMIT 230KV CKT 1'	319	319	0.10403	112.2584	'SPP-MKEC-08'
13G	03ALL	'FROM->TO'	'SMOKYHL6 230.00 - SUMMIT 230KV CKT 1'	319	319	0.11941	112.2584	'SPP-MKEC-08'
13G	03ALL	'FROM->TO'	'SMOKYHL6 230.00 - SUMMIT 230KV CKT 1'	319	319	0.11941	112.2584	'SPP-MKEC-08'
13G	03ALL	'FROM->TO'	'SMOKYHL6 230.00 - SUMMIT 230KV CKT 1'	319	319	0.62817	112.2584	'SPP-MKEC-08'
13G	03ALL	'FROM->TO'	'SMOKYHL6 230.00 - SUMMIT 230KV CKT 1'	319	319	0.07765	112.2584	'SPP-MKEC-08'
13G	03ALL	'FROM->TO'	'SMOKYHL6 230.00 - SUMMIT 230KV CKT 1'	319	319	0.10397	112.2584	'SPP-MKEC-08'
13G	03ALL	'FROM->TO'	'SMOKYHL6 230.00 - SUMMIT 230KV CKT 1'	319	319	0.13209	112.2584	'SPP-MKEC-08'
13G	03ALL	'FROM->TO'	'SMOKYHL6 230.00 - SUMMIT 230KV CKT 1'	319	319	0.10657	112.2584	'SPP-MKEC-08'
13G	03ALL	'FROM->TO'	'ST JOHN - ST_JOHN 115KV CKT 1'	86	86	0.03692	111.2209	'SPP-MKEC-08'
13G	03ALL	'FROM->TO'	'ST JOHN - ST_JOHN 115KV CKT 1'	86	86	0.09576	111.2209	'SPP-MKEC-08'
13G	03ALL	'FROM->TO'	'ST JOHN - ST_JOHN 115KV CKT 1'	86	86	0.08418	111.2209	'SPP-MKEC-08'
13G	03ALL	'FROM->TO'	'ST JOHN - ST_JOHN 115KV CKT 1'	86	86	0.04613	111.2209	'SPP-MKEC-08'
13G	03ALL	'FROM->TO'	'ST JOHN - ST_JOHN 115KV CKT 1'	86	86	0.04613	111.2209	'SPP-MKEC-08'
13G	03ALL	'FROM->TO'	'ST JOHN - ST_JOHN 115KV CKT 1'	86	86	0.14951	111.2209	'SPP-MKEC-08'
13G	03ALL	'FROM->TO'	'ST JOHN - ST_JOHN 115KV CKT 1'	86	86	0.03819	111.2209	'SPP-MKEC-08'
13G	03ALL	'FROM->TO'	'ST JOHN - ST_JOHN 115KV CKT 1'	86	86	0.03804	111.2209	'SPP-MKEC-08'
13G	03ALL	'FROM->TO'	'ST JOHN - ST_JOHN 115KV CKT 1'	86	86	0.03804	111.2209	'SPP-MKEC-08'
13G	03ALL	'FROM->TO'	'ST JOHN - ST_JOHN 115KV CKT 1'	86	86	0.25947	111.2209	'SPP-MKEC-08'
13G	03ALL	'FROM->TO'	'ST JOHN - ST_JOHN 115KV CKT 1'	86	86	0.03723	111.2209	'SPP-MKEC-08'
13G	03ALL	'FROM->TO'	'ST JOHN - ST_JOHN 115KV CKT 1'	86	86	0.0409	111.2209	'SPP-MKEC-08'
13G	03ALL	'FROM->TO'	'ST JOHN - ST_JOHN 115KV CKT 1'	86	86	0.03512	111.2209	'SPP-MKEC-08'

SEASON	GROUP	DIRECTION	MONITORED ELEMENT	RATE A (MVA)	RATE B (MVA)	TDF	TC%LOADING (%MVA)	CONTINGENCY NAME
13G	03ALL	'TO->FROM'	'GREENSBURG - SSTARTP3 115.00 115KV CKT 1	120.7	129.5	0.13856	100	'SPP-MKEC-08'
13G	03ALL	'TO->FROM'	'GREENSBURG - SSTARTP3 115.00 115KV CKT 1	120.7	129.5	0.32349	100	'SPP-MKEC-08'
13G	03ALL	'FROM->TO'	'NORTH JUDSON LARGE SUB - SPEARVILLE 115KV CKT 1'	165.1	177.7	0.68062	114.6619	'SPP-MKEC-08'
13G	03ALL	'FROM->TO'	'NORTH JUDSON LARGE SUB - SPEARVILLE 115KV CKT 1'	165.1	177.7	0.52916	114.6619	'SPP-MKEC-08'
13G	03ALL	'FROM->TO'	'NORTH JUDSON LARGE SUB - SPEARVILLE 115KV CKT 1'	165.1	177.7	0.2786	114.6619	'SPP-MKEC-08'
13G	03ALL	'FROM->TO'	'SMOKYHL6 230.00 - SUMMIT 230KV CKT 1'	319	319	0.1894	109.7688	'SPP-WEPL-03'
13G	03ALL	'FROM->TO'	'SMOKYHL6 230.00 - SUMMIT 230KV CKT 1'	319	319	0.09662	109.7688	'SPP-WEPL-03'
13G	03ALL	'FROM->TO'	'SMOKYHL6 230.00 - SUMMIT 230KV CKT 1'	319	319	0.11518	109.7688	'SPP-WEPL-03'
13G	03ALL	'FROM->TO'	'SMOKYHL6 230.00 - SUMMIT 230KV CKT 1'	319	319	0.12757	109.7688	'SPP-WEPL-03'
13G	03ALL	'FROM->TO'	'SMOKYHL6 230.00 - SUMMIT 230KV CKT 1'	319	319	0.12757	109.7688	'SPP-WEPL-03'
13G	03ALL	'FROM->TO'	'SMOKYHL6 230.00 - SUMMIT 230KV CKT 1'	319	319	0.10116	109.7688	'SPP-WEPL-03'
13G	03ALL	'FROM->TO'	'SMOKYHL6 230.00 - SUMMIT 230KV CKT 1'	319	319	0.10403	109.7688	'SPP-WEPL-03'
13G	03ALL	'FROM->TO'	'SMOKYHL6 230.00 - SUMMIT 230KV CKT 1'	319	319	0.11941	109.7688	'SPP-WEPL-03'
13G	03ALL	'FROM->TO'	'SMOKYHL6 230.00 - SUMMIT 230KV CKT 1'	319	319	0.11941	109.7688	'SPP-WEPL-03'
13G	03ALL	'FROM->TO'	'SMOKYHL6 230.00 - SUMMIT 230KV CKT 1'	319	319	0.62817	109.7688	'SPP-WEPL-03'
13G	03ALL	'FROM->TO'	'SMOKYHL6 230.00 - SUMMIT 230KV CKT 1'	319	319	0.07765	109.7688	'SPP-WEPL-03'
13G	03ALL	'FROM->TO'	'SMOKYHL6 230.00 - SUMMIT 230KV CKT 1'	319	319	0.10397	109.7688	'SPP-WEPL-03'
13G	03ALL	'FROM->TO'	'SMOKYHL6 230.00 - SUMMIT 230KV CKT 1'	319	319	0.13209	109.7688	'SPP-WEPL-03'
13G	03ALL	'FROM->TO'	'SMOKYHL6 230.00 - SUMMIT 230KV CKT 1'	319	319	0.10657	109.7688	'SPP-WEPL-03'
13G	03ALL	'FROM->TO'	'HUNTSVILLE - HUTCHINSON ENERGY CENTER 115KV CKT 1	68	68	0.03692	110.7878	'SPP-WEPL-03'
13G	03ALL	'FROM->TO'	'HUNTSVILLE - HUTCHINSON ENERGY CENTER 115KV CKT 1	68	68	0.09576	110.7878	'SPP-WEPL-03'
13G	03ALL	'FROM->TO'	'HUNTSVILLE - HUTCHINSON ENERGY CENTER 115KV CKT 1	68	68	0.08418	110.7878	'SPP-WEPL-03'
13G	03ALL	'FROM->TO'	'HUNTSVILLE - HUTCHINSON ENERGY CENTER 115KV CKT 1	68	68	0.04613	110.7878	'SPP-WEPL-03'
13G	03ALL	'FROM->TO'	'HUNTSVILLE - HUTCHINSON ENERGY CENTER 115KV CKT 1	68	68	0.04613	110.7878	'SPP-WEPL-03'
13G	03ALL	'FROM->TO'	'HUNTSVILLE - HUTCHINSON ENERGY CENTER 115KV CKT 1	68	68	0.14951	110.7878	'SPP-WEPL-03'
13G	03ALL	'FROM->TO'	'HUNTSVILLE - HUTCHINSON ENERGY CENTER 115KV CKT 1	68	68	0.03819	110.7878	'SPP-WEPL-03'
13G	03ALL	'FROM->TO'	'HUNTSVILLE - HUTCHINSON ENERGY CENTER 115KV CKT 1	68	68	0.03804	110.7878	'SPP-WEPL-03'
13G	03ALL	'FROM->TO'	'HUNTSVILLE - HUTCHINSON ENERGY CENTER 115KV CKT 1	68	68	0.03804	110.7878	'SPP-WEPL-03'
13G	03ALL	'FROM->TO'	'HUNTSVILLE - HUTCHINSON ENERGY CENTER 115KV CKT 1	68	68	0.25947	110.7878	'SPP-WEPL-03'
13G	03ALL	'FROM->TO'	'HUNTSVILLE - HUTCHINSON ENERGY CENTER 115KV CKT 1	68	68	0.03723	110.7878	'SPP-WEPL-03'
13G	03ALL	'FROM->TO'	'HUNTSVILLE - HUTCHINSON ENERGY CENTER 115KV CKT 1	68	68	0.0409	110.7878	'SPP-WEPL-03'
13G	03ALL	'FROM->TO'	'HUNTSVILLE - HUTCHINSON ENERGY CENTER 115KV CKT 1	68	68	0.03512	110.7878	'SPP-WEPL-03'
13G	03ALL	'FROM->TO'	'ST JOHN - ST_JOHN 115KV CKT 1'	86	86	0.03692	125.1911	'SPP-WEPL-03'
13G	03ALL	'FROM->TO'	'ST JOHN - ST_JOHN 115KV CKT 1'	86	86	0.09576	125.1911	'SPP-WEPL-03'
13G	03ALL	'FROM->TO'	'ST JOHN - ST_JOHN 115KV CKT 1'	86	86	0.08418	125.1911	'SPP-WEPL-03'
13G	03ALL	'FROM->TO'	'ST JOHN - ST_JOHN 115KV CKT 1'	86	86	0.04613	125.1911	'SPP-WEPL-03'
13G	03ALL	'FROM->TO'	'ST JOHN - ST_JOHN 115KV CKT 1'	86	86	0.04613	125.1911	'SPP-WEPL-03'
13G	03ALL	'FROM->TO'	'ST JOHN - ST_JOHN 115KV CKT 1'	86	86	0.14951	125.1911	'SPP-WEPL-03'
13G	03ALL	'FROM->TO'	'ST JOHN - ST_JOHN 115KV CKT 1'	86	86	0.03819	125.1911	'SPP-WEPL-03'
13G	03ALL	'FROM->TO'	'ST JOHN - ST_JOHN 115KV CKT 1'	86	86	0.03804	125.1911	'SPP-WEPL-03'
13G	03ALL	'FROM->TO'	'ST JOHN - ST_JOHN 115KV CKT 1'	86	86	0.03804	125.1911	'SPP-WEPL-03'
13G	03ALL	'FROM->TO'	'ST JOHN - ST_JOHN 115KV CKT 1'	86	86	0.25947	125.1911	'SPP-WEPL-03'
13G	03ALL	'FROM->TO'	'ST JOHN - ST_JOHN 115KV CKT 1'	86	86	0.03723	125.1911	'SPP-WEPL-03'
13G	03ALL	'FROM->TO'	'ST JOHN - ST_JOHN 115KV CKT 1'	86	86	0.0409	125.1911	'SPP-WEPL-03'
13G	03ALL	'FROM->TO'	'ST JOHN - ST_JOHN 115KV CKT 1'	86	86	0.03512	125.1911	'SPP-WEPL-03'
13G	03ALL	'FROM->TO'	'SMOKYHL6 230.00 - SUMMIT 230KV CKT 1'	319	319	0.1894	109.8264	'SPP-WEPL-03A'
13G	03ALL	'FROM->TO'	'SMOKYHL6 230.00 - SUMMIT 230KV CKT 1'	319	319	0.09662	109.8264	'SPP-WEPL-03A'
13G	03ALL	'FROM->TO'	'SMOKYHL6 230.00 - SUMMIT 230KV CKT 1'	319	319	0.11518	109.8264	'SPP-WEPL-03A'
13G	03ALL	'FROM->TO'	'SMOKYHL6 230.00 - SUMMIT 230KV CKT 1'	319	319	0.12757	109.8264	'SPP-WEPL-03A'
13G	03ALL	'FROM->TO'	'SMOKYHL6 230.00 - SUMMIT 230KV CKT 1'	319	319	0.12757	109.8264	'SPP-WEPL-03A'
13G	03ALL	'FROM->TO'	'SMOKYHL6 230.00 - SUMMIT 230KV CKT 1'	319	319	0.10116	109.8264	'SPP-WEPL-03A'
13G	03ALL	'FROM->TO'	'SMOKYHL6 230.00 - SUMMIT 230KV CKT 1'	319	319	0.10403	109.8264	'SPP-WEPL-03A'
13G	03ALL	'FROM->TO'	'SMOKYHL6 230.00 - SUMMIT 230KV CKT 1'	319	319	0.11941	109.8264	'SPP-WEPL-03A'
13G	03ALL	'FROM->TO'	'SMOKYHL6 230.00 - SUMMIT 230KV CKT 1'	319	319	0.11941	109.8264	'SPP-WEPL-03A'
13G	03ALL	'FROM->TO'	'SMOKYHL6 230.00 - SUMMIT 230KV CKT 1'	319	319	0.62817	109.8264	'SPP-WEPL-03A'
13G	03ALL	'FROM->TO'	'SMOKYHL6 230.00 - SUMMIT 230KV CKT 1'	319	319	0.07765	109.8264	'SPP-WEPL-03A'
13G	03ALL	'FROM->TO'	'SMOKYHL6 230.00 - SUMMIT 230KV CKT 1'	319	319	0.10397	109.8264	'SPP-WEPL-03A'
13G	03ALL	'FROM->TO'	'SMOKYHL6 230.00 - SUMMIT 230KV CKT 1'	319	319	0.13209	109.8264	'SPP-WEPL-03A'
13G	03ALL	'FROM->TO'	'SMOKYHL6 230.00 - SUMMIT 230KV CKT 1'	319	319	0.10657	109.8264	'SPP-WEPL-03A'
13G	03ALL	'FROM->TO'	'HUNTSVILLE - HUTCHINSON ENERGY CENTER 115KV CKT 1	68	68	0.03692	108.6772	'SPP-WEPL-03A'
13G	03ALL	'FROM->TO'	'HUNTSVILLE - HUTCHINSON ENERGY CENTER 115KV CKT 1	68	68	0.09576	108.6772	'SPP-WEPL-03A'
13G	03ALL	'FROM->TO'	'HUNTSVILLE - HUTCHINSON ENERGY CENTER 115KV CKT 1	68	68	0.08418	108.6772	'SPP-WEPL-03A'
13G	03ALL	'FROM->TO'	'HUNTSVILLE - HUTCHINSON ENERGY CENTER 115KV CKT 1	68	68	0.04613	108.6772	'SPP-WEPL-03A'
13G	03ALL	'FROM->TO'	'HUNTSVILLE - HUTCHINSON ENERGY CENTER 115KV CKT 1	68	68	0.04613	108.6772	'SPP-WEPL-03A'

SEASON	GROUP	DIRECTION	MONITORED ELEMENT	RATE A (MVA)	RATE B (MVA)	TDF	TC%LOADING (%MVA)	CONTINGENCY NAME
13G	03ALL	'FROM->TO'	'HUNTSVILLE - HUTCHINSON ENERGY CENTER 115KV CKT 1	68	68	0.14951	108.6772	'SPP-WEPL-03A'
13G	03ALL	'FROM->TO'	'HUNTSVILLE - HUTCHINSON ENERGY CENTER 115KV CKT 1	68	68	0.03819	108.6772	'SPP-WEPL-03A'
13G	03ALL	'FROM->TO'	'HUNTSVILLE - HUTCHINSON ENERGY CENTER 115KV CKT 1	68	68	0.03804	108.6772	'SPP-WEPL-03A'
13G	03ALL	'FROM->TO'	'HUNTSVILLE - HUTCHINSON ENERGY CENTER 115KV CKT 1	68	68	0.03804	108.6772	'SPP-WEPL-03A'
13G	03ALL	'FROM->TO'	'HUNTSVILLE - HUTCHINSON ENERGY CENTER 115KV CKT 1	68	68	0.25947	108.6772	'SPP-WEPL-03A'
13G	03ALL	'FROM->TO'	'HUNTSVILLE - HUTCHINSON ENERGY CENTER 115KV CKT 1	68	68	0.03723	108.6772	'SPP-WEPL-03A'
13G	03ALL	'FROM->TO'	'HUNTSVILLE - HUTCHINSON ENERGY CENTER 115KV CKT 1	68	68	0.0409	108.6772	'SPP-WEPL-03A'
13G	03ALL	'FROM->TO'	'HUNTSVILLE - HUTCHINSON ENERGY CENTER 115KV CKT 1	68	68	0.03512	108.6772	'SPP-WEPL-03A'
13G	03ALL	'FROM->TO'	'ST JOHN - ST_JOHN 115KV CKT 1'	86	86	0.03692	123.6028	'SPP-WEPL-03A'
13G	03ALL	'FROM->TO'	'ST JOHN - ST_JOHN 115KV CKT 1'	86	86	0.09576	123.6028	'SPP-WEPL-03A'
13G	03ALL	'FROM->TO'	'ST JOHN - ST_JOHN 115KV CKT 1'	86	86	0.08418	123.6028	'SPP-WEPL-03A'
13G	03ALL	'FROM->TO'	'ST JOHN - ST_JOHN 115KV CKT 1'	86	86	0.04613	123.6028	'SPP-WEPL-03A'
13G	03ALL	'FROM->TO'	'ST JOHN - ST_JOHN 115KV CKT 1'	86	86	0.04613	123.6028	'SPP-WEPL-03A'
13G	03ALL	'FROM->TO'	'ST JOHN - ST_JOHN 115KV CKT 1'	86	86	0.14951	123.6028	'SPP-WEPL-03A'
13G	03ALL	'FROM->TO'	'ST JOHN - ST_JOHN 115KV CKT 1'	86	86	0.03819	123.6028	'SPP-WEPL-03A'
13G	03ALL	'FROM->TO'	'ST JOHN - ST_JOHN 115KV CKT 1'	86	86	0.03804	123.6028	'SPP-WEPL-03A'
13G	03ALL	'FROM->TO'	'ST JOHN - ST_JOHN 115KV CKT 1'	86	86	0.03804	123.6028	'SPP-WEPL-03A'
13G	03ALL	'FROM->TO'	'ST JOHN - ST_JOHN 115KV CKT 1'	86	86	0.25947	123.6028	'SPP-WEPL-03A'
13G	03ALL	'FROM->TO'	'ST JOHN - ST_JOHN 115KV CKT 1'	86	86	0.03723	123.6028	'SPP-WEPL-03A'
13G	03ALL	'FROM->TO'	'ST JOHN - ST_JOHN 115KV CKT 1'	86	86	0.0409	123.6028	'SPP-WEPL-03A'
13G	03ALL	'FROM->TO'	'ST JOHN - ST_JOHN 115KV CKT 1'	86	86	0.03512	123.6028	'SPP-WEPL-03A'
13G	03ALL	'TO->FROM'	'CLEARWATER - MILAN TAP 138KV CKT 1'	110	110	0.03565	127.4887	'SPP-WERE-32'
13G	03ALL	'TO->FROM'	'CLEARWATER - MILAN TAP 138KV CKT 1'	110	110	0.0621	127.4887	'SPP-WERE-32'
13G	03ALL	'TO->FROM'	'CLEARWATER - MILAN TAP 138KV CKT 1'	110	110	0.10811	127.4887	'SPP-WERE-32'
13G	03ALL	'TO->FROM'	'CLEARWATER - MILAN TAP 138KV CKT 1'	110	110	0.04839	127.4887	'SPP-WERE-32'
13G	03ALL	'TO->FROM'	'CLEARWATER - MILAN TAP 138KV CKT 1'	110	110	0.04839	127.4887	'SPP-WERE-32'
13G	03ALL	'TO->FROM'	'CLEARWATER - MILAN TAP 138KV CKT 1'	110	110	0.20942	127.4887	'SPP-WERE-32'
13G	03ALL	'TO->FROM'	'CLEARWATER - MILAN TAP 138KV CKT 1'	110	110	0.0375	127.4887	'SPP-WERE-32'
13G	03ALL	'TO->FROM'	'CLEARWATER - MILAN TAP 138KV CKT 1'	110	110	0.03936	127.4887	'SPP-WERE-32'
13G	03ALL	'TO->FROM'	'CLEARWATER - MILAN TAP 138KV CKT 1'	110	110	0.03936	127.4887	'SPP-WERE-32'
13G	03ALL	'TO->FROM'	'CLEARWATER - MILAN TAP 138KV CKT 1'	110	110	0.52441	127.4887	'SPP-WERE-32'
13G	03ALL	'TO->FROM'	'CLEARWATER - MILAN TAP 138KV CKT 1'	110	110	0.03693	127.4887	'SPP-WERE-32'
13G	03ALL	'TO->FROM'	'CLEARWATER - MILAN TAP 138KV CKT 1'	110	110	0.04262	127.4887	'SPP-WERE-32'
13G	03ALL	'TO->FROM'	'CLEARWATER - MILAN TAP 138KV CKT 1'	110	110	0.03604	127.4887	'SPP-WERE-32'
13G	03ALL	'FROM->TO'	'HARPER - MILAN TAP 138KV CKT 1'	95.6	95.6	0.03565	154.096	'SPP-WERE-32'
13G	03ALL	'FROM->TO'	'HARPER - MILAN TAP 138KV CKT 1'	95.6	95.6	0.0621	154.096	'SPP-WERE-32'
13G	03ALL	'FROM->TO'	'HARPER - MILAN TAP 138KV CKT 1'	95.6	95.6	0.10811	154.096	'SPP-WERE-32'
13G	03ALL	'FROM->TO'	'HARPER - MILAN TAP 138KV CKT 1'	95.6	95.6	0.04839	154.096	'SPP-WERE-32'
13G	03ALL	'FROM->TO'	'HARPER - MILAN TAP 138KV CKT 1'	95.6	95.6	0.04839	154.096	'SPP-WERE-32'
13G	03ALL	'FROM->TO'	'HARPER - MILAN TAP 138KV CKT 1'	95.6	95.6	0.20942	154.096	'SPP-WERE-32'
13G	03ALL	'FROM->TO'	'HARPER - MILAN TAP 138KV CKT 1'	95.6	95.6	0.0375	154.096	'SPP-WERE-32'
13G	03ALL	'FROM->TO'	'HARPER - MILAN TAP 138KV CKT 1'	95.6	95.6	0.03936	154.096	'SPP-WERE-32'
13G	03ALL	'FROM->TO'	'HARPER - MILAN TAP 138KV CKT 1'	95.6	95.6	0.03936	154.096	'SPP-WERE-32'
13G	03ALL	'FROM->TO'	'HARPER - MILAN TAP 138KV CKT 1'	95.6	95.6	0.52441	154.096	'SPP-WERE-32'
13G	03ALL	'FROM->TO'	'HARPER - MILAN TAP 138KV CKT 1'	95.6	95.6	0.03693	154.096	'SPP-WERE-32'
13G	03ALL	'FROM->TO'	'HARPER - MILAN TAP 138KV CKT 1'	95.6	95.6	0.04262	154.096	'SPP-WERE-32'
13G	03ALL	'FROM->TO'	'HARPER - MILAN TAP 138KV CKT 1'	95.6	95.6	0.03604	154.096	'SPP-WERE-32'
13G	03ALL	'FROM->TO'	'AUBURN ROAD - SWISSVALE 230KV CKT 1'	319	319	0.04506	102.771	'WRTOD400'
13G	03ALL	'FROM->TO'	'AUBURN ROAD - SWISSVALE 230KV CKT 1'	319	319	0.14935	102.771	'WRTOD400'
13G	03ALL	'FROM->TO'	'AUBURN ROAD - SWISSVALE 230KV CKT 1'	319	319	0.04945	102.771	'WRTOD400'
13G	03ALL	'FROM->TO'	'MOUNDRIDGE (MOUND10X) 138/115/13.8KV TRANSFORMER CKT 1'	100	110	0.03034	100.2207	'WRTOD400'
13G	03ALL	'FROM->TO'	'MOUNDRIDGE (MOUND10X) 138/115/13.8KV TRANSFORMER CKT 1'	100	110	0.03337	100.2207	'WRTOD400'
13G	03ALL	'FROM->TO'	'MOUNDRIDGE (MOUND10X) 138/115/13.8KV TRANSFORMER CKT 1'	100	110	0.06637	100.2207	'WRTOD400'
13G	03ALL	'FROM->TO'	'MOUNDRIDGE (MOUND10X) 138/115/13.8KV TRANSFORMER CKT 1'	100	110	0.0367	100.2207	'WRTOD400'